June 7, 1927. 1,631,617

A. BROADMEYER

SHEET RETARDING MEANS FOR SHEET FEEDING APPARATUS

Filed Nov. 28, 1923 2 Sheets-Sheet 1

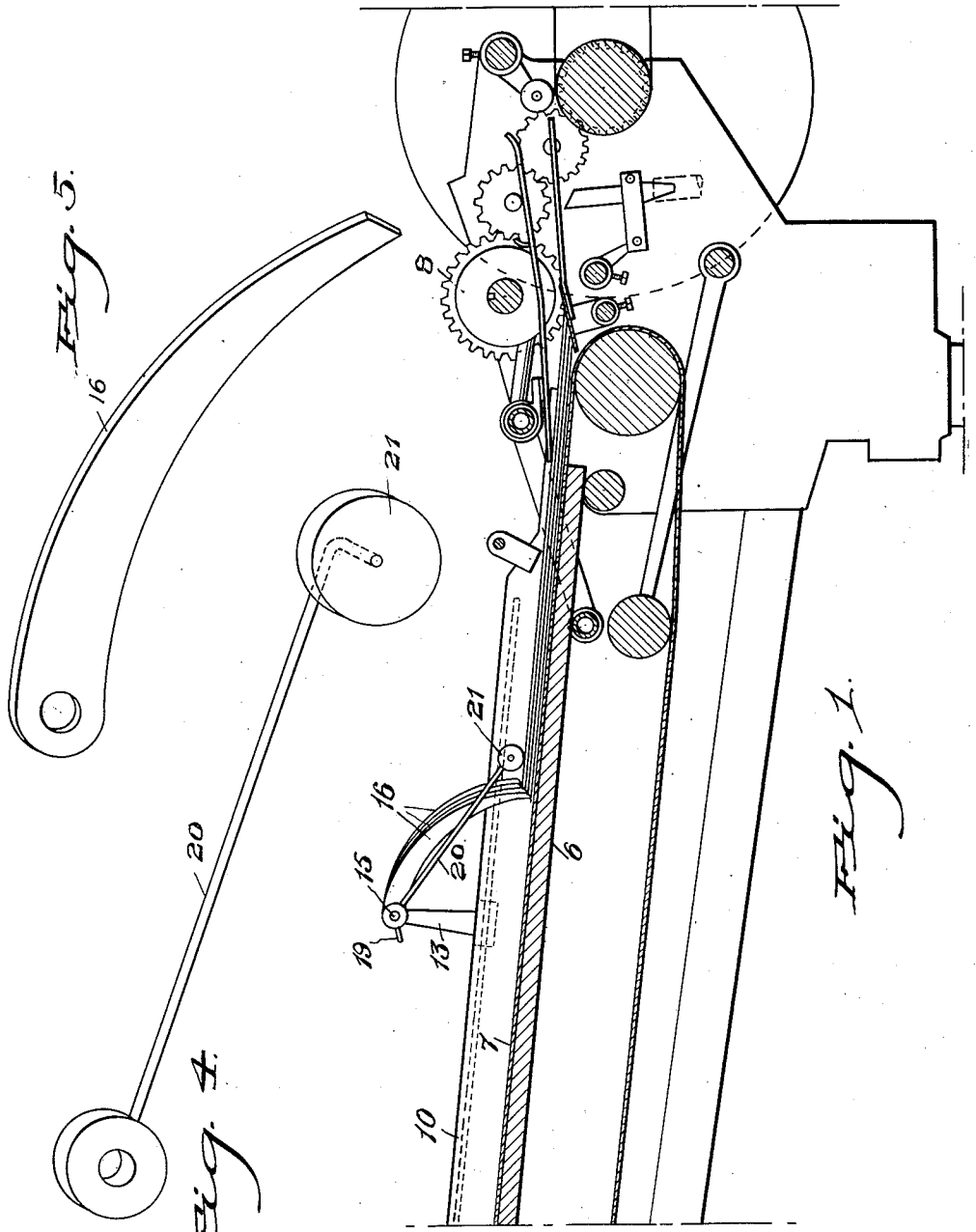

Fig. 5.

Fig. 4.

Fig. 1.

Inventor
Albert Broadmeyer

By

Attorney

June 7, 1927. 1,631,617

A. BROADMEYER

SHEET RETARDING MEANS FOR SHEET FEEDING APPARATUS

Filed Nov. 28, 1923 2 Sheets-Sheet 2

Fig. 2.

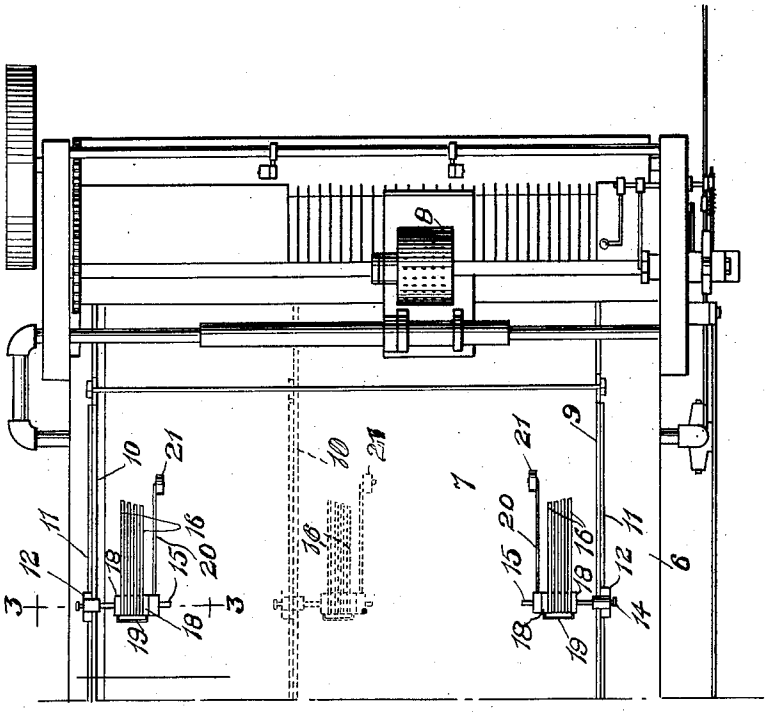

Fig. 3.

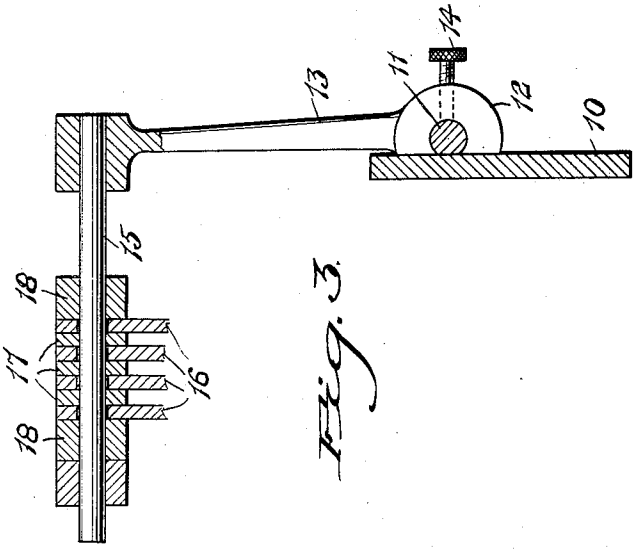

Inventor

Albert Broadmeyer

By

Attorney

Patented June 7, 1927. 1,631,617

UNITED STATES PATENT OFFICE.

ALBERT BROADMEYER, OF HARRISBURG, PENNSYLVANIA, ASSIGNOR TO THE W. O. HICKOK MFG. CO., OF HARRISBURG, PENNSYLVANIA, A CORPORATION OF PENNSYLVANIA.

SHEET-RETARDING MEANS FOR SHEET-FEEDING APPARATUS.

Application filed November 28, 1923. Serial No. 677,455.

The object of the present invention is to provide novel, simple and effective means for retarding the movement of the underlying sheets of a pile when the topmost sheet is being delivered from such pile, said means being readily adjustable in order that it will operate on sheets of different widths and lengths.

In the accompanying drawings:—

Figure 1 is a longitudinal sectional view through a feeding machine with the retarding mechanism in place thereon,

Figure 2 is a top plan view,

Figure 3 is a detail sectional view on an enlarged scale on the line 3—3 of Figure 2,

Figure 4 is a perspective view of the smoothing roller and its mounting,

Figure 5 is a perspective view of one of the drag fingers.

In the embodiment disclosed, the improvements are applied to a feeding machine, in which a downwardly inclined table 6 is employed, over which passes the upper stretch 7 of an endless carrier belt that delivers a plurality of sheets to a rotary suction roll 8. This roll, as is well known, removes the topmost sheets successively. Due to friction, static electricity and other causes it sometimes happens that the sheet underlying the top sheet is carried along with it and it is the object of this present invention to hold back the underlying sheets.

The table 6 is provided with side walls 9 and 10, the latter being adjustable over the stretch 7 of the carrier belt toward and from the side wall 9. On both of these side walls are mounted longitudinally disposed rods 11, constituting guideways on which are slidably mounted the bases 12 of standards 13. These standards can be held in any desired position by set screws 14. The upper ends of the standards are provided with horizontal pivots 15 that overhang the upper stretch 7 of the carrier belt and are disposed transversely thereof. On these pivots are loosely hung curved drag fingers 16 that are of different lengths and are preferably spaced apart by washers 17. Collars 18 frictionally engaged with the pivots and arranged on opposite sides of the sets of fingers are preferably connected by yokes 19. On the inner ends of the pivots are loosely journaled arms 20, and on the free ends of said arms are journaled rollers 21 preferably located in rear of the free ends of the fingers.

With this type of machine, as is well known, the sheets are brought to the delivery end of the table in lapped condition, thus bringing the rear ends of said sheets in stepped relation. The mountings for the fingers are adjusted so that said fingers will rest upon the exposed rear ends of the sheets, and consequently as said sheets are successively withdrawn from the pile, the fingers lying on the lower sheets will hold said sheets and prevent their movement with the topmost. The rollers 21 serve to maintain the topmost sheet smooth and unwrinkled.

Obviously upon the relative adjustment of the side walls these retarding devices are also relatively adjustable so that they will always be placed in operative relation to the rear ends of the sheets, irrespective of the differences in the widths or lengths thereof.

From the foregoing it is thought that the construction, operation and many advantages of the herein described invention will be apparent to those skilled in the art, without further description, and it will be understood that various changes in the size, shape, proportion and minor details of construction may be resorted to without departing from the spirit of sacrificing any of the advantages of the invention.

What I claim, is:—

1. In sheet feeding apparatus, the combination with a support and means for delivering sheets therefrom, of a plurality of freely and relatively movable retarding fingers having a common mounting and by gravity resting on the sheets at different points.

2. In sheet feeding apparatus, the combination with a support and means for delivering sheets therefrom, of a mounting overhanging the support, and a plurality of relatively movable retarding fingers pivotally supported on the mounting and lying on the sheets placed on the supports.

3. In sheet feeding apparatus, the combination with a support and means for delivering sheets therefrom, of a mounting overhanging the support, and a plurality of relatively movable retarding fingers of different lengths movably supported on the mount-

ing and held by gravity on the sheets placed on the supports.

4. In sheet feeding apparatus, the combination with a support and means for removing sheets successively therefrom, of a mounting overhanging the support, and a plurality of independently movable drag fingers pivotally carried by the mounting and resting on the sheets carried by the support.

5. In sheet feeding apparatus, the combination with a support and means for removing sheets successively therefrom, of a mounting including a pivot overhanging the support, and a plurality of drag fingers of different lengths journaled on the pivot and resting at different points on the sheets carried by the support.

6. In sheet feeding apparatus, the combination with a support and means for removing sheets successively therefrom, of a mounting overhanging the support and adjustable along the same, and a retarding device carried by the mounting and adjustable therewith, said device loosely resting by gravity on the sheets on the support.

7. In sheet feeding apparatus, the combination with a support including a movable sheet carrier, of means for delivering sheets successively from the support, a side wall for said support, a guideway extending longitudinally along the side wall, a mounting adjustable along the guideway, and a plurality of freely and relatively movable drag fingers side by side on the mounting and resting on the sheets on the carrier.

8. In sheet feeding apparatus, the combination with a support including a movable sheet carrier, of means for delivering sheets successively from the support, a side wall for said support adjustable transversely of the carrier, a guideway extending longitudinally along the side wall, a mounting adjustable along the guideway, and a plurality of drag fingers pivotally supported side by side on the mounting and loosely resting on the sheets on the carrier.

9. In sheet feeding apparatus, the combination with a table and an endless sheet carrier operating thereon, sheet feeding means at one end of the table, a side wall adjustable transversely of the sheet carrier, a guide longitudinally on the side wall, a mounting slidable on the guide and including a pivot transversely overhanging the carrier, and a plurality of drag fingers of different lengths journaled on the pivot and resting on the sheets on the carrier.

10. In sheet feeding apparatus, the combination with a sheet support and means for feeding sheets successively therefrom, of a loosely pivoted carrier that overhangs the support and rests by gravity on the sheets, and a smoothing roller journaled on the carrier and resting on the sheets on the support.

11. In sheet feeding apparatus, the combination with a sheet support and means for feeding sheets successively therefrom, of pivoted, relatively movable retarding fingers that bear upon the sheets on the support, a loosely pivoted carrier that overhangs the support and has its axis coincident with those of the fingers, and a smoothing roller journaled on the carrier and resting on the sheets on the support adjacent to the fingers.

12. In sheet feeding apparatus, the combination with a sheet support and means for feeding sheets successively therefrom, of a pivot overhanging the support, a plurality of drag fingers of different lengths journaled on the pivot and resting on the sheets on the support, an arm also journaled on the pivot and relatively movable to the fingers, and a roller journaled on the free end of the arm and also resting on the said sheets.

In testimony whereof, I affix my signature.

ALBERT BROADMEYER.