United States Patent [19]

Yuen

[11] **Patent Number: Des. 282,179**

[45] **Date of Patent: ** Jan. 14, 1986**

[54] **COMBINED TELEPHONE INDEX AND AMPLIFIER**

[75] Inventor: **John S. Yuen**, Kowloon, Hong Kong

[73] Assignee: **John Manufacturing Limited**, Kowloon, Hong Kong

[**] Term: **14 Years**

[21] Appl. No.: **459,215**

[22] Filed: **Jan. 19, 1983**

[30] **Foreign Application Priority Data**

Sep. 22, 1982 [GB] United Kingdom 1008830

[52] **U.S. Cl.** **D19/76**; D14/57

[58] **Field of Search** ..... D19/75, 76, 87; D14/4, D14/5, 57; 40/371, 372, 375, 389, 390; 281/15 B, 45; 179/100 D, 100 L

[56] **References Cited**

U.S. PATENT DOCUMENTS

D. 152,922	3/1949	Shipton	D14/57
D. 232,867	9/1974	Se-Kit	D19/76
D. 247,174	2/1978	Janda	D14/57
D. 259,885	7/1981	Halm	D19/76
D. 269,432	6/1983	Kowalik et al.	D14/57
D. 272,636	2/1984	Se-Kit	D19/76

Primary Examiner—George P. Word

Attorney, Agent, or Firm—Beall Law Offices

[57] **CLAIM**

The ornamental design for a combined telephone index and amplifier, substantially as shown and described.

DESCRIPTION

FIG. **1** is a top front perspective view of a combined telephone index and amplifier showing my new design; FIG. **2** is a bottom rear perspective view thereof; and FIG. **3** is a top plan view thereof.

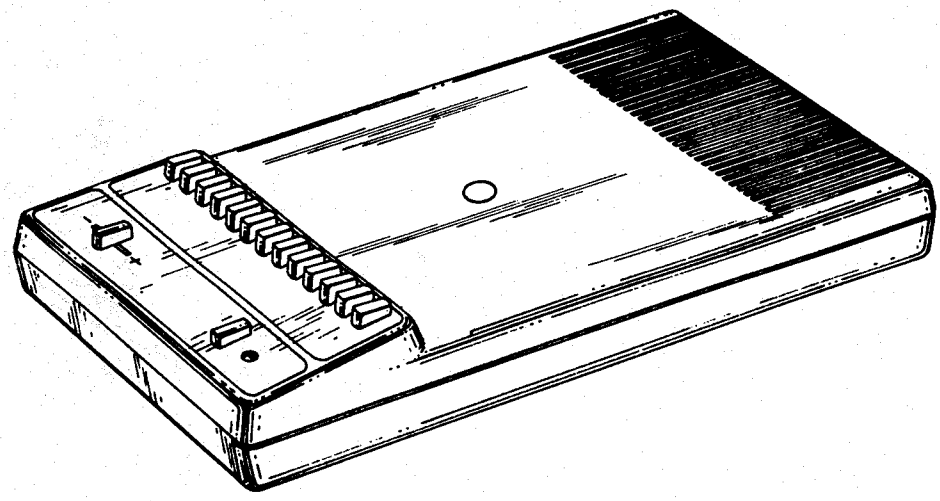

FIG. 1.

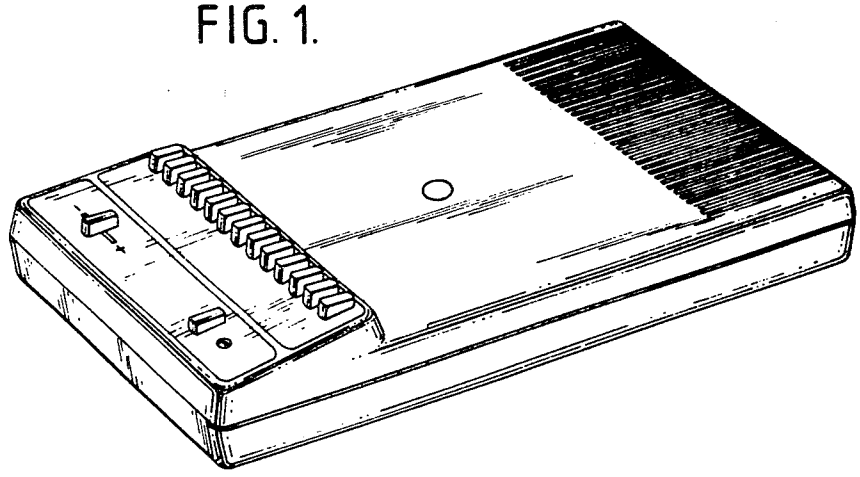

FIG. 2.

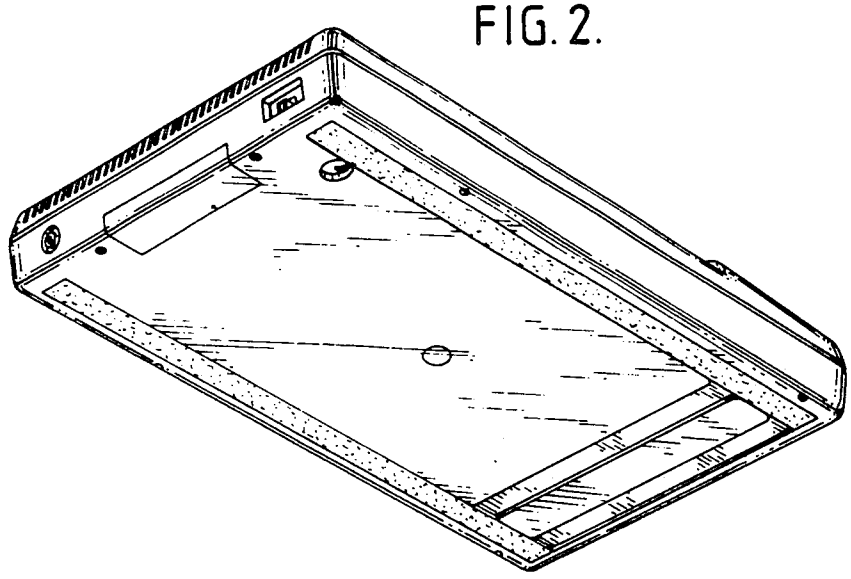

FIG. 3.

