April 13, 1937. R. BECHMANN 2,077,204

PIEZOELECTRIC OSCILLATING CRYSTAL

Filed Nov. 27, 1935

Fig. 1

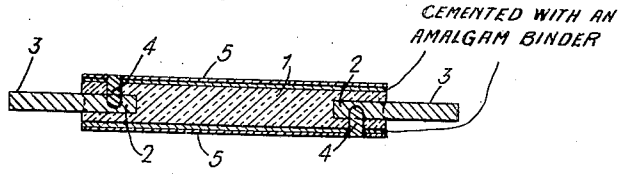

Fig. 2

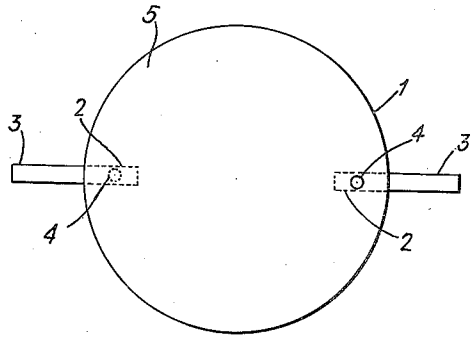

INVENTOR.
RUDOLF BECHMANN

BY H. G. Brown

ATTORNEY.

Patented Apr. 13, 1937 2,077,204

UNITED STATES PATENT OFFICE

2,077,204

PIEZOELECTRIC OSCILLATING CRYSTAL

Rudolf Bechmann, Berlin, Germany, assignor to Telefunken Gesellschaft für Drahtlose Telegraphie m. b. H., Berlin, Germany, a corporation of Germany

Application November 27, 1935, Serial No. 51,738
In Germany December 10, 1934

6 Claims. (Cl. 171—327)

This invention relates to measures for mounting piezo-electric oscillating crystals employed as oscillators or resonators.

For oscillating crystals of high frequency constancy it is of great importance to provide a mount of low damping and insensitive to vibrations. The mounts hitherto employed do not comply in all points with these requirements. By placing the crystal plate on a single electrode surface only, its position will thereby not be insured while the holding down of the crystal by means of springs is objectionable in view of damping thereby involved. It has been proposed to support the crystal plate at the edge in several point by means of clamping pieces resting on the crystal plate in a springy fashion, but also these arrangements are not sufficiently safe against vibrations and furthermore when using circular crystal plates, the position of the supporting points relative to the axes of the crystal is a question of incidence.

According to the invention, bores are provided in the oscillating crystals into which support carriers are cemented which in turn are held in a mount. It is especially advisable to provide these bores at nodal points of the natural oscillations of the crystal, since in this case additional damping due to the mounting organs is avoided to a great extent. As will be readily understood and also confirmed by means of tests, the drilling and cementing of carriers in the bores does not influence the oscillatory performance of the crystal to a notable degree and this is especially true at the nodal points. The idea of the invention is not only applicable to disk- or plate shaped oscillating crystals, but can also be used on rod-shaped oscillators. The bores may be laid either parallel to the effective surface of the crystal plate, or else they may be arranged at right angles to the surface of the plate.

The mounting, according to the invention, offers particular advantages in regard to the current leads at the crystal electrodes. It has already been proposed to cover the surface of oscillating crystals with metal and to utilize these metal layers as electrodes. A certain difficulty was however always encountered in the application of a current lead to the electrode layers. In accordance with the idea of the invention the electrical connection of the metallized surfaces is particularly simple in that the carriers cemented into the crystal are composed of metal and each is connected to the respective conducting layer serving as electrode. The contact of the metal surface with the cemented carriers is especially safe if as cementing material binders having an electrical conductivity are used as, for instance, an amalgam.

An example embodying the idea of the invention is shown in the drawing in which Fig. 1 is a sectional view of a crystal and support carriers, and Fig. 2 is a plan view of Fig. 1.

In the figures, item 1 designates a circular crystal plate with bores 2 at diametrically opposite places. In these bores, carriers 3 are cemented whereby as cementing material amalgam may suitably be employed as above-mentioned. The two flat surfaces of the crystal plate are covered with separate metal layers 5 used as electrodes. The electrical connection to the electrodes is achieved in the following manner: From bores 2 there extend towards different sides connecting bores 4 which are filled in with conducting material whereby a safe electrical contact is produced between the metallic supports 3 and electrodes 5. The channel 4 is simply filled in with the same material used for the cementing of the supports 3. The supports 3 are themselves supported by mounting elements of known type.

I claim:

1. A piezo-electric oscillating crystal characterized in that said crystal is provided with bores in which rod-shaped support carriers are cemented for mounting said crystal, and a metallic coating on each face of said crystal, said metallic coating serving as an electrode which is conductively connected with one respective support carrier consisting of metal.

2. A piezo-electric oscillating crystal characterized in that said crystal is provided with bores in which rod-shaped support carriers are cemented for mounting said crystal, the cement for binding said support carriers having electrical conductivity.

3. A piezo-electric oscillating crystal characterized in that said crystal is provided with bores in which rod-shaped support carriers are cemented for mounting said crystal, a metallic coating on each face of said crystal, said metallic coating serving as an electrode which is conductively connected with one respective support carrier consisting of metal, and bores for electrically connecting said support carriers and said metallic coating, said bores being filled in with conducting material.

4. A piezo-electric oscillating crystal comprising a disk-like crystal having two metallic members for supporting and mounting said crystal, said metallic members being located diametri-

cally opposite each other, a metallic plate cemented to each face of said crystal and acting as electrodes, and means for electrically connecting at least one of said metallic members and at least one of said metallic plates together.

5. A piezo-electric oscillating crystal comprising a disc-like crystal having two metallic members for supporting and mounting said crystal, said metallic members being located diametrically opposite each other, a metallic plate cemented to each face of said crystal with an amalgam binder and acting as electrodes, and means for electrically connecting at least one of said metallic members and at least one of said metallic plates together.

6. A piezo-electric oscillating crystal comprising a disc-like crystal having two rod-shaped metallic members for supporting and mounting said crystal, said metallic members being located diametrically opposite each other, a metallic plate cemented to each face of said crystal with an amalgam binder and acting as electrodes, and means for electrically connecting at least one of said metallic members and at least one of said metallic plates together.

RUDOLF BECHMANN.