May 10, 1949. C. Z. HUBBELL 2,469,922

LOOSE-LEAF BINDER

Original Filed Sept. 4, 1940 3 Sheets-Sheet 1

FIG. 1

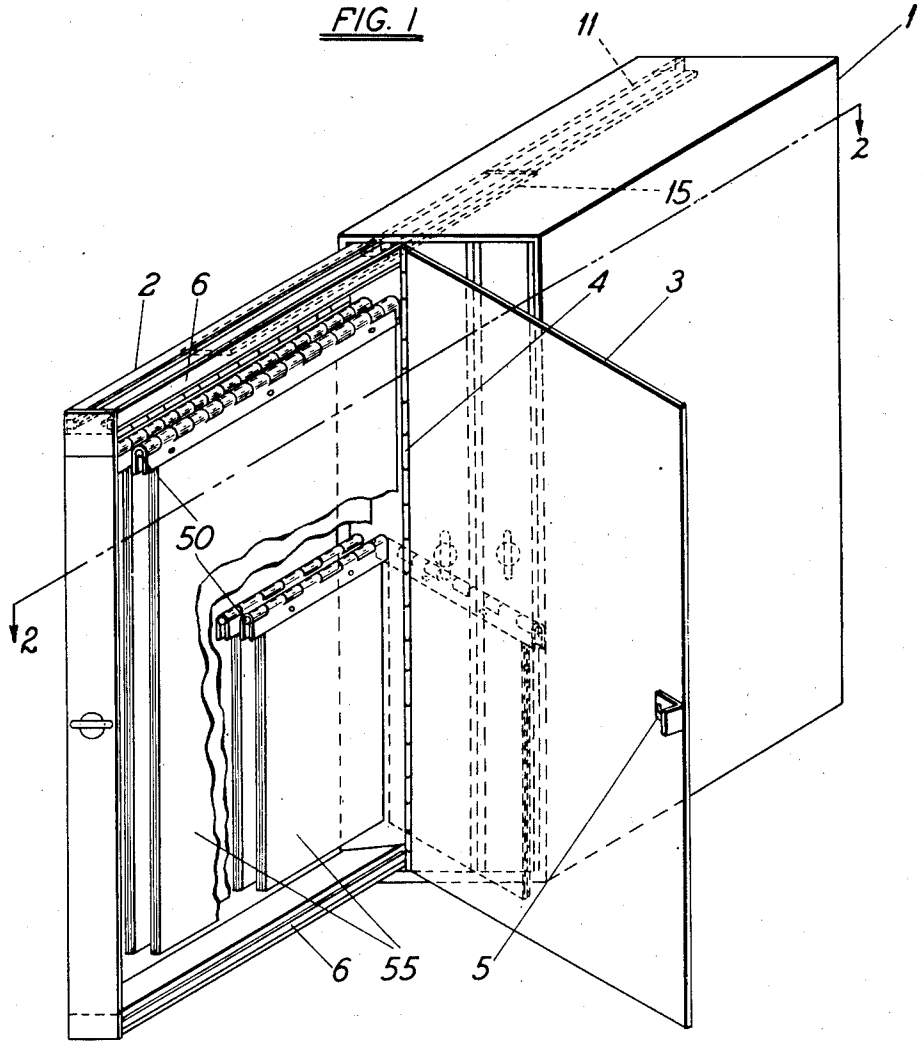

CLARENCE Z. HUBBELL
INVENTOR

BY Leech & Radue
ATTORNEYS

May 10, 1949. C. Z. HUBBELL 2,469,922

LOOSE-LEAF BINDER

Original Filed Sept. 4, 1940 3 Sheets-Sheet 2

FIG. 2

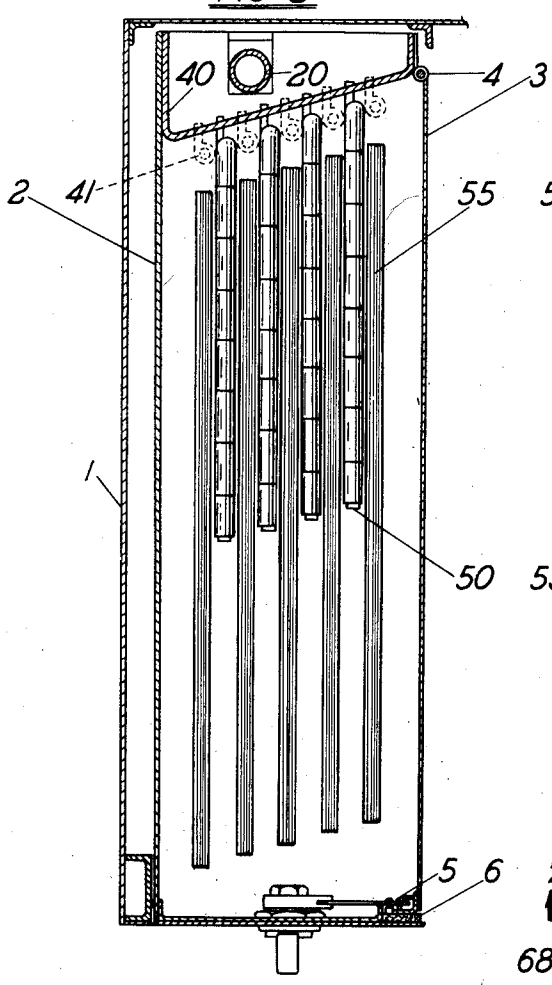

FIG. 3

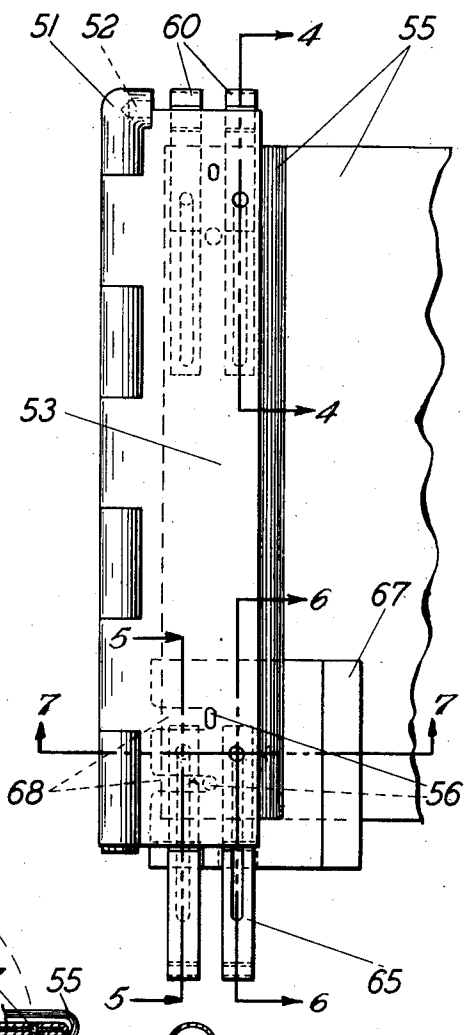

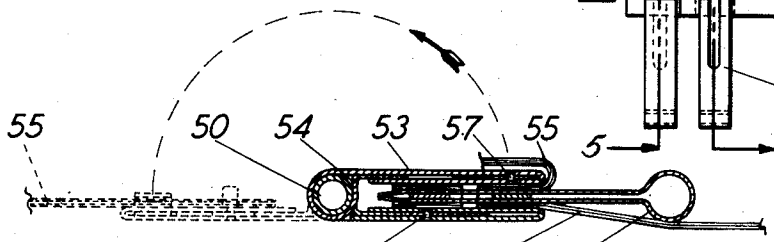

FIG. 7

CLARENCE Z. HUBBELL
INVENTOR

BY Leach & Radue
ATTORNEYS

May 10, 1949. C. Z. HUBBELL 2,469,922

LOOSE-LEAF BINDER

Original Filed Sept. 4, 1940 3 Sheets-Sheet 3

FIG. 8

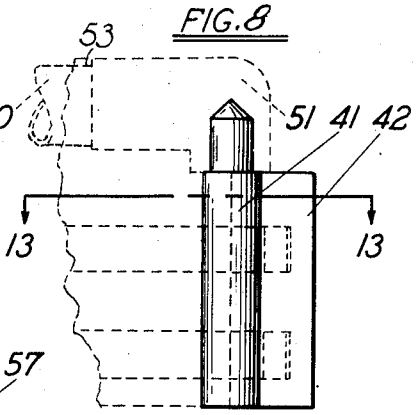

FIG. 9

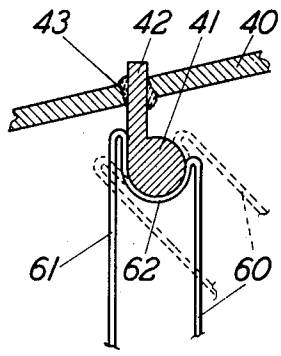

FIG. 4

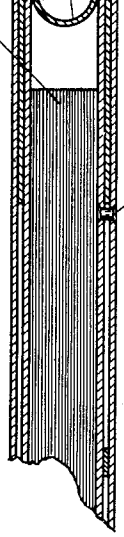

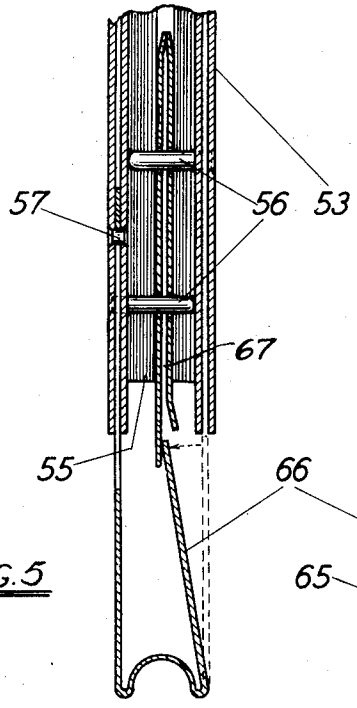

FIG. 5

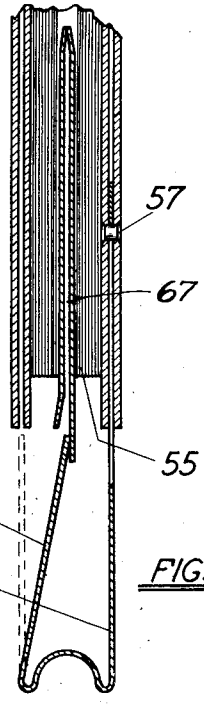

FIG. 6

CLARENCE Z. HUBBELL
INVENTOR

By Leach & Radue
ATTORNEYS

Patented May 10, 1949

2,469,922

UNITED STATES PATENT OFFICE

2,469,922

LOOSE-LEAF BINDER

Clarence Z. Hubbell, Endicott, N. Y.

Original application September 4, 1940, Serial No. 355,336. Divided and this application January 5, 1945, Serial No. 571,381

3 Claims. (Cl. 129—1)

1

This invention relates to filing cabinets and more particularly to vertical filing cabinets having a plurality of slidable dustproof drawers in which are hung a series of horizontal hangers for supporting large drawings, tracings, maps and other sheet material in a flat, undamaged condition. This application is a division of my copending application, Serial No. 355,336, filed September 4, 1940, for Filing cabinet, since matured into Patent No. 2,370,664, dated March 6, 1945.

An object of the invention is to provide a cabinet of this character which will support a large number of sizable drawings and tracings in such a manner that any one sheet may be quickly and readily removed from its hanger without disturbing the remainder of the drawings in the file.

A further object of the invention is the provision of means for pivotally supporting the series of horizontal hangers in such a manner that when one of the vertical drawers is extended, the hangers may be spread apart in a fan-like manner to permit easy access to any drawing or tracing within the compartment.

Another important object of the invention resides in the provision of the herein described novel construction and operation of the drawing hangers which permit a large number of sheets to be properly filed in a comparatively small space and yet allow any individual hanger to be opened at the desired point for the removal of a selected sheet, while securely retaining all of the other sheets in proper position within the opened hanger.

In the drawings:

Fig. 1 is a perspective view of a filing cabinet unit with one vertical drawer extended and in partially open position;

Fig. 2 is a horizontal cross-section taken on the plane of line 2—2 of Figure 1, but showing the drawer in a closed and locked position;

Fig. 3 is an enlarged view showing the details of construction of one of the hangers with its sheet selector, sheet holding springs and cover clamp springs;

Fig. 4 is a fragmentary cross-section of the sheet holder taken on line 4—4 of Fig. 3;

Fig. 5 is a fragmentary horizontal cross-section taken on line 5—5 of Fig. 3 showing the operation of the holding springs and selector;

Fig. 6 is also a fragmentary horizontal cross-section showing the second holding spring and taken on line 6—6 of Fig. 3;

Fig. 7 is a vertical cross-section of the hanger and sheet holder taken on line 7—7 of Fig. 3 and showing the position of the sheet selector and holding springs;

2

Fig. 8 is an enlarged view of one of the hanger pivot pins with a portion of the hanger and cover springs shown in dotted lines; and

Fig. 9 is a fragmentary horizontal cross-section through one of the hanger pivot pins and its support with one of the cover springs shown in two relative positions.

Essentially, the present invention comprises a metal casing 1 of any suitable size for the reception of one or more vertical slidably mounted drawers 2, These drawers may be constructed of sheet metal of a suitable guage and are preferably narrow in width as compared to their vertical dimension. The file drawers 2 are formed by a plurality of sheets welded around their peripheries to one side wall with the opposite side wall or door 3 hinged at one rear edge 4 and provided with a lock 5 at the free end thereof. To insure that each of the drawers will be dustproof, it is preferable to insert a yieldable sealing strip 6 around the edges thereof in such a manner that when the doors 3 are closed and locked the file is completely sealed.

Each of the vertical drawers is supported at its top and bottom within the casing 1 by means of anti-friction sliding supports, guides, pinions and racks which insure the easy and rapid reciprocation of the drawers within the casing. This mechanism also insures the free movement of the drawers from closed to open position without any lateral or vertical play or binding and further effects the proper support of the drawers in all positions.

The back of each drawer is formed by a vertically extending channel member 40 which may be welded to the side walls of the drawer and positioned at an angle to rather than parallel to the front wall and extending from the pivot 4 of the door 3 toward the opposite wall of the drawer. Each of these back walls 40 is suitably perforated as at 43 for the reception of a plurality of vertical pivots 41 having laterally extending vertical arms 42 welded in the openings 43. Additional pivots may, if desired, be alternately spaced between the upper pivots at any desired height, such as shown in Fig. 1, to accommodate drawings of smaller size and to further take advantage of all the available space in the drawers.

Referring now to Figs. 3 and 7 which show the sheet hangers in more detail, it is preferable to support each hanger on a tube 50 or a rod hav-

ing an end 51 formed with a vertical socket 52 therein for the reception of a vertical pivot pin 41. A pair of depending cover members 53 are hinged upon the horizontal tube 50 with the free ends of the cover members folded back upon themselves in spaced relation and terminating on either side of alternating angle members 54. This construction permits one side of the pivoted cover to be opened or raised, as shown in dotted lines in Fig. 7.

Numeral 55 denotes the tracings or drawings held between a spaced pair of covers on pairs of pins 56 that are positioned on alternating covers adjacent the front and rear edges thereof. The pins 56 span the space between the covers as shown in Fig. 5. These pins are rigidly fixed to their respective covers and extend through suitable perforations in the tracings or drawings to the opposite cover so that normally each sheet is hung on at least four sturdy pins. As before stated, the side covers 53 are each formed of two thicknesses slightly spaced from one another with this distance maintained by rivets 57. The object of this spacing is, first, for the reception of a pair of spaced apart spring clips 60 whose spaced arms 61 are inserted between the walls of the side covers at the rear edges thereof, forming a yieldable lock. Between the arms 61, the spring clips are formed with a curved bearing surface 62 which rides against the lower portion of the vertical pivot pins 41. At the front edges of each hanger a pair of somewhat similar spring clips 65 are inserted between the side walls of the covers to normally hold them flat against the sheets 55.

Thus, as clearly illustrated in Fig. 1 of the drawings, any selected drawer within the cabinet 1 may be pulled out to its fully extended position whereupon the pivoted side wall 3 may be opened, exposing the entire interior of the drawer. The several pivoted hangers 50 within the drawer may then be swung open in a fan-like manner to permit easy access to and inspection of the drawer contents. Information may be taken from the drawings as thus displayed or any particular hanger 50 may be readily removed from its pivot pin 41 by simply lifting the hanger which may then be laid upon a convenient flat surface and any selected drawing may be more easily inspected.

Where it is desired to remove a selected sheet from the sheath contained within any particular hanger, a selector 67 may be employed to assist in the ready removal of the desired sheet. The selector 67 may comprise a pair of slightly spaced flat parallel leaves formed by a folded sheet of resilient material and provided with a tapered end with opposed pairs of inwardly extending vertical slots 68 so that when inserted between the sheets it will slide beyond the supporting pins 56. One side of the selector also has its edges tapered together as shown in Figs. 5 and 6 to facilitate insertion between the sheets in a transverse direction. The other side of the selector has each edge slotted at a point spaced from the slotted portion of the other to provide spring clip abutments. After the selector 67 has been properly inserted, the front spring clips 65 are to be pulled outwardly until the short arms 66 thereof leave contact with the side of the binder and contact the overhanging lip of the selector, whereupon the spring clips are again pushed inwardly riding upon the surface of the selector. The rear spring clips may be similarly pulled out and reinserted to unlock the sides of the binder, whereupon the selector is removed, the binder may be opened and the desired sheet removed from the pins 56. Accordingly, it will be seen that any selected sheet may be quickly and easily removed from any selected hanger or binder and the remaining sheets will be firmly and securely held in place until the single sheet has been replaced and the binder again locked and positioned upon its hanger.

It will be obvious that many modifications in construction, design and operation may be made without departing from the spirit or scope of this invention as defined by the appended claims.

I claim:

1. A loose leaf binder comprising a pair of spaced covers hingedly connected at one edge; oppositely projecting pins spanning the space between said covers for supporting a plurality of data sheets; and a pair of spring clips each having a short arm and a long arm for clamping said covers together, said spring clips being spaced along one pair of end edges of said covers with their long arms slidably mounted on respective covers, whereby the short arms of the spring clips may be selectively disengaged from the respective covers and interposed between adjacent data sheets to securely retain all of said sheets when said covers are opened.

2. A loose leaf binder comprising a rod member; a pair of spaced covers hinged to said rod member, each of said covers being provided with a slotted formation in each end thereof; longitudinally spaced, oppositely projecting pins spanning the space between said covers for supporting a plurality of data sheets; a first pair of spring clips each having a short arm and a long arm for clamping said covers together at one end; and a second pair of spring clips each having a short arm and a long arm for clamping said covers together at the other end, the arms of said pairs of spring clips being slidably mounted in the slotted formations at the respective cover ends with a long arm of each pair mounted in the slotted formation of each cover, whereby the short arms of the spring clips may be selectively disengaged from the respective covers and interposed between adjacent data sheets to securely retain all of said sheets when said covers are opened.

3. A loose leaf binder and hanger comprising a supporting rod having one end formed with a pivot socket extending perpendicular thereto; a pair of spaced covers hinged to said supporting rod; oppositely projecting pins extending from the inner sides of said covers, said covers having an adjacent pair of end edge portions each formed with an inwardly extending recess spaced from said pivot socket; and a spring clip having spaced connected arms mounted in said recesses for sliding movement and holding said covers together, said clip having an arcuate bearing portion intermediate its arms arranged coaxially with the pivot socket for bearing on a pivot pin engageable by said pivot socket.

CLARENCE Z. HUBBELL.

REFERENCES CITED

The following references are of record in the file of this patent:

UNITED STATES PATENTS

Number	Name	Date
453,574	Blinco	June 2, 1891
506,073	Prentis	Oct. 3, 1893

(Other references on following page)

UNITED STATES PATENTS

Number	Name	Date
619,228	Rosenthal	Feb. 7, 1899
755,380	Montgomery	Mar. 22, 1904
856,800	Parkes	June 11, 1907
1,048,956	Gostick	Dec. 31, 1912
1,060,074	Fox	Apr. 29, 1913
1,608,211	Hermann	Nov. 23, 1926
1,609,589	Wahlgren	Dec. 7, 1926
1,867,159	Kline	July 12, 1932
1,891,376	Furlong	Dec. 20, 1932
1,935,641	Kline	Nov. 21, 1933
2,208,231	Russell	July 16, 1940
2,370,664	Hubbell	Mar. 6, 1945

FOREIGN PATENTS

Number	Country	Date
353,122	Italy	1937
812,386	France	1937