(12) INTERNATIONAL APPLICATION PUBLISHED UNDER THE PATENT COOPERATION TREATY (PCT)

(19) World Intellectual Property Organization
International Bureau

(43) International Publication Date
7 January 2016 (07.01.2016)

WIPO | PCT

(10) International Publication Number
WO 2016/001778 A1

(51) International Patent Classification:
H02B 1/36 (2006.01) *H02B 1/38* (2006.01)

(21) International Application Number:
PCT/IB2015/054355

(22) International Filing Date:
9 June 2015 (09.06.2015)

(25) Filing Language: English

(26) Publication Language: English

(30) Priority Data:
14/318,971 30 June 2014 (30.06.2014) US
14/600,616 20 January 2015 (20.01.2015) US

(71) Applicant: **EATON CORPORATION** [US/US]; 1000 Eaton Boulevard, Cleveland, Ohio 44122 (US).

(72) Inventors: **ONEUFER, Stephen William**; 1730 Pristine Lane, Fayetteville, North Carolina 28348 (US). **MORRIS, Robert Allan**; 501 Beaverpond Court, Fayetteville, North Carolina 28311 (US). **KROUSHL, Daniel Boyd**; 128 Mantle Drive, Clayton, North Carolina 27577 (US).

(74) Agent: **MYERS BIGEL SIBLEY & SAJOVEC, P.A.**; P.O. Box 37428, Raleigh, North Carolina 27627 (US).

(81) Designated States *(unless otherwise indicated, for every kind of national protection available)*: AE, AG, AL, AM, AO, AT, AU, AZ, BA, BB, BG, BH, BN, BR, BW, BY, BZ, CA, CH, CL, CN, CO, CR, CU, CZ, DE, DK, DM, DO, DZ, EC, EE, EG, ES, FI, GB, GD, GE, GH, GM, GT, HN, HR, HU, ID, IL, IN, IR, IS, JP, KE, KG, KN, KP, KR, KZ, LA, LC, LK, LR, LS, LU, LY, MA, MD, ME, MG, MK, MN, MW, MX, MY, MZ, NA, NG, NI, NO, NZ, OM, PA, PE, PG, PH, PL, PT, QA, RO, RS, RU, RW, SA, SC, SD, SE, SG, SK, SL, SM, ST, SV, SY, TH, TJ, TM, TN, TR, TT, TZ, UA, UG, US, UZ, VC, VN, ZA, ZM, ZW.

(84) Designated States *(unless otherwise indicated, for every kind of regional protection available)*: ARIPO (BW, GH, GM, KE, LR, LS, MW, MZ, NA, RW, SD, SL, ST, SZ, TZ, UG, ZM, ZW), Eurasian (AM, AZ, BY, KG, KZ, RU, TJ, TM), European (AL, AT, BE, BG, CH, CY, CZ, DE, DK, EE, ES, FI, FR, GB, GR, HR, HU, IE, IS, IT, LT, LU, LV, MC, MK, MT, NL, NO, PL, PT, RO, RS, SE, SI, SK, SM, TR), OAPI (BF, BJ, CF, CG, CI, CM, GA, GN, GQ, GW, KM, ML, MR, NE, SN, TD, TG).

Published:

— *with international search report (Art. 21(3))*

— *before the expiration of the time limit for amending the claims and to be republished in the event of receipt of amendments (Rule 48.2(h))*

(54) Title: TELESCOPING PANELS SUITABLE FOR MOTOR CONTROL CENTER UNITS

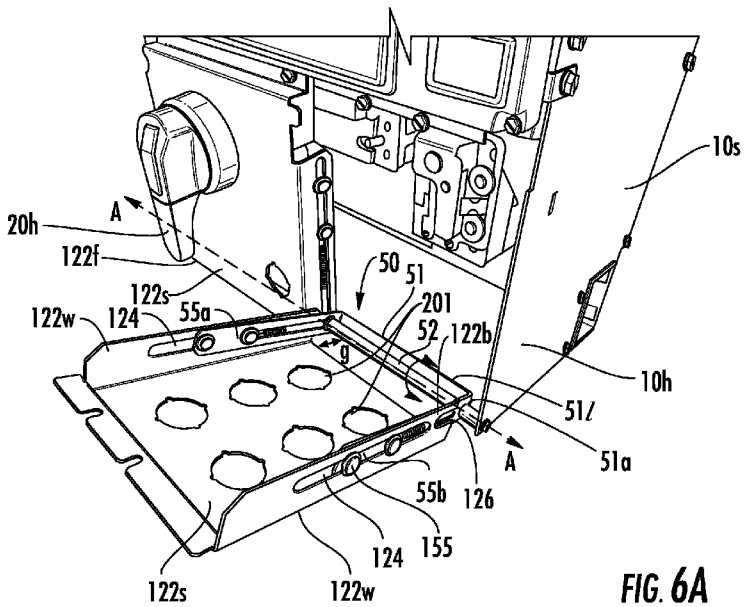

FIG. 6A

(57) Abstract: Motor control centers have units or bucket assemblies with a front panel configured to pivot about a long axis associated with a bottom long side thereof and slide radially with respect to the shaft, away from the shaft in an open position to thereby position the front panel a distance away from the shaft to be able to fully open to at least ninety degrees.

WO 2016/001778 A1

TELESCOPING PANELS SUITABLE FOR MOTOR CONTROL CENTER UNITS

Related Applications

[0001] This application is a continuation-in-part of U.S. Patent Application Serial Number 14/318,971, filed June 30, 2014, the contents of which are hereby incorporated by reference as if recited in full herein.

Field of the Invention

[0002] The present invention relates to motor control systems and more particularly to motor control center units.

Background of the Invention

[0003] As is known to those of skill in the art, Motor Control Centers (MCC) can include cabinets or enclosures that hold multiple, typically modular, bucket assemblies of various sizes. *See, e.g.*, U.S. Patent No. 4,024,441, the contents of which are hereby incorporated by reference as if recited in full herein. Eaton Corporation has recently introduced a MCC product line with compact bucket assemblies that conveniently plug into a slot or space in an MCC cabinet. The product is sold under the product name, Freedom 2100 MCC. *See also*, U.S. Patent Application Publication Serial Number US2013/0077210, the contents of which are hereby incorporated by reference as if recited in full herein.

[0004] Motor control centers are used, for example, in some commercial and industrial applications to distribute electrical power to a variety of loads (e.g., without limitation, relatively high power electrical motors, pumps, and other loads).

[0005] The bucket assemblies (also known as "buckets" or "units") can include operating handles that are disposed on the front door. The handle can be a rotary handle configured to convert the rotary motion of the rotary handle to the linear or translational motion of a circuit breaker linear action lever. *See, e.g.*, US. Patent Nos. 6,194,983 and 7,186,933, the contents of which are incorporated by reference as if recited in full herein. The handle is typically mounted parallel with the plane of the faceplate of the molded case circuit breaker, but spaced outwardly from it by the depth of the handle mechanism. Usually, a series of linkages are utilized to interconnect the rotary motion of the rotary handle to the linear motion of the circuit breaker handle or lever.

[0006] **Figure 1**, for example, shows a portion of a prior art motor control center **100**. The motor control center **100** includes a multi-compartment enclosure **12** for receiving a

plurality of motor control units **10**. Typically, each bucket **10** is a removable, pull-out unit that has a respective door **22** (which may be under a front panel). The door **22** is typically coupled to the housing **12** by hinges **28** (shown in phantom line drawing in **Figure 1**) to permit access to motor control components of the bucket **10** while it is installed in the enclosure **12**. For example and without limitation, the door **22** permits access to a circuit breaker assembly, a stab indicator **32**, a shutter indicator **34**, and a line contact actuator **36**. In the past conventional device panels were not used in favor of a membrane printed circuit panel **30.**

[0007] When the bucket **10** is fully installed and electrically connected, a user-operator may operate a so-called handle operator or disconnect handle **20h**. In a de-energized state of the motor control center **100**, the user-operator may operate an isolation feature by moving a slide **40** and inserting crank **42** through an access portal or hole **43** in the door **22** to access the line contact actuator **36** to move a number of line contacts (see, for example, stab contacts **46**,**48**,**50** of the prior art bucket **10** of **Figure 2**) to an isolated position out of (see **Figure 2**) electrical contact with power lines or buses **152** (partially shown in phantom line drawing in **Figure 2**) of the motor control center **100**. Motor control centers and units therefore (also sometimes called "subunits") are described in greater detail, for example, in commonly assigned U.S. Patent Application Publications 2009/0086414, 2008/0258667, 2008/0023211 and 2008/0022673, which are hereby incorporated herein by reference.

[0008] Despite the above, there remains a need for alternate bucket configurations.

Summary of Embodiments of the Invention

[0009] Embodiments of the invention are directed to buckets/units with telescoping and pivotable front panels that allow access to interior components for maintenance, trouble shooting, service and/or repair and the like.

[0010] The buckets/units can include a front panel holding at least one operator disconnect handle. The front panel can be a single panel or side-by-side dual sub-panels that are detachable (releasably attached) along inner short sides thereof to be able to pivot outward together. The single panel or dual sub-panels can be pivotably attached to a unit housing to pivot and telescopingly extend a distance outward.

[0011] The front panel can be a single panel that extends between the sidewalls.

[0012] The front panel can be configured as two adjacent sub-panels that are attached at inner sides thereof to be able to pivot outwardly in concert along the long axis.

[0013] Embodiments of the invention are directed to a bucket assembly that includes a housing, a telescoping hinge assembly with at least one shaft attached to the housing, and a panel or at least one sub-panel holding at least one handle operator and/or pilot devices pivotably attached to the telescoping hinge assembly so that the panel or sub-panel is configured to (i) pivot about the at least one shaft to swing open from a closed position and (ii) slide outward in a direction away from the at least one shaft.

[0014] The panel or at least one sub-panel can include opposing right and left sidewalls oriented in a plane that is orthogonal to a front facing primary wall of the panel or at least one sub-panel. The at least one shaft can include or be a laterally extending shaft that resides along a bottom portion of the housing attached to opposing, laterally spaced apart housing sidewalls. The telescoping hinge assembly can also include slide arms that slide in longitudinally extending slots in or co-planar with the panel or respective sub-panel sidewall planes to allow the panel or sub-panel to slide in a radial direction relative to the at least one shaft outward away from the laterally extending shaft to open and back toward the laterally extending shaft to the closed position.

[0015] The at least one shaft is a single laterally extending shaft that resides along a bottom portion of the housing. The telescoping hinge assembly can include a support member attached to the laterally extending shaft. The support member can include laterally spaced apart side segments that cooperate with the panel or at least one sub-panel, arranged so that, in the closed position, the support member side segments extend upwardly away from the laterally extending shaft.

[0016] The panel or sub-panel can include a front wall and opposing right and left sidewalls oriented in planes that are parallel to each other and orthogonal to the front wall of the panel or sub-panel. The telescoping hinge assembly can include a support member with a laterally extending segment spanning between right and left upwardly extending side segments. The right and left upwardly extending side segments can be co-planar to corresponding planes of the right and left sidewalls of the panel or sub-panels.

[0017] The hinge assembly can include right and left springs that extend in a longitudinal direction. The right spring can be attached to the right sidewall of the panel or a respective sub-panel and the right upwardly extending side segment of the support member. The left spring can be attached to the left sidewall of the panel or respective sub-panel and the left upwardly extending side segment of the support member. The springs can bias the panel or respective sub-panel in a latched position whereby the springs that attach the panel or at least one sub-panel to the housing bias the panel or sub-panel in a latched position so the

panel or sub-panel remains secured to the housing unless there is a manual action by a user to pull the panel or sub-panel down to open the panel or sub-panel.

[0018] The hinge assembly can include right and left slide arms that slidably travel back and forth in longitudinally extending slots in or co-planar with a corresponding right and left sidewall plane of the panel or respective sub-panel.

[0019] The at least one shaft can include a laterally extending shaft that resides along a bottom portion of the housing attached to opposing, laterally spaced apart housing sidewalls. The panel or at least one sub-panel can include opposing right and left sidewalls oriented in planes that are parallel to each other and orthogonal to a front facing wall of the panel or at least one sub-panel. A bottom of the right and left sidewalls of the panel or at least one sub-panel can have an arcuate open channel sized and configured to slidably receive the shaft when in the closed position.

[0020] The at least one shaft can include a laterally extending shaft attached to the housing. The panel or at least one sub-panel can be configured as dual adjacently positioned sub-panels with flat front surfaces with the dual sub-panels configured as a handle operator panel and a pilot device panel. The pilot device panel and the handle operator panel can be metallic. The pilot device panel can be in abutting contact with the laterally extending shaft when in the closed position to define an electrical ground for pilot devices held by the pilot panel.

[0021] The panel or at least one sub-panel can be side-by-side dual sub-panels that are releasably attached along inner facing adjacent sides to be able to pivot outward together or separately. The sub-panels can engage at least one unit interlock attached to the unit housing to controllably lock and unlock the sub-panels to allow the sub-panels to open from the unit housing only when there is non-conduction.

[0022] In some embodiments, a motor control center (MCC) includes one or more of the the bucket assemblies described hereinabove. The panel or at least one sub-panel can be metal, typically steel.

[0023] Other embodiments are directed to bucket assemblies that include a housing, a hinge assembly with a shaft attached to the housing and a support member configured to pivot about the shaft; and a panel or at least one sub-panel attached to the support member and configured to slide radially with respect to the shaft to thereby pivot about the at least one shaft and slide outward in a direction away from the at least one shaft to open from a closed position to an open position.

[0024] The panel or at least one sub-panel can hold at least one handle operator and/or pilot devices attached to the telescoping hinge assembly so that the panel or sub-panel is configured to

[0025] The panel or at least one sub-panel can include opposing right and left sidewalls oriented in planes that are parallel to each other and orthogonal to a front facing primary wall of the panel or at least one sub-panel. The shaft can be a laterally extending shaft that resides along a bottom portion of the housing attached to opposing, laterally spaced apart housing sidewalls. The hinge assembly support member can include slide arms that slide in longitudinally extending slots that are in or co-planar to the right and left sidewalls to allow the panel or at least one sub-panel to slide outward in the direction away from the shaft to open and back toward the shaft to the closed position.

[0026] The shaft can be a single laterally extending shaft that resides along a bottom portion of the housing.

[0027] The hinge assembly support member can includea a frame attached to the laterally extending shaft. The frame can include laterally spaced apart side segments that cooperate with the panel or at least one sub-panel, arranged so that, in the closed position, the frame side segments extend upwardly away from the laterally extending shaft.

[0028] The panel or sub-panel can include a front wall and opposing right and left sidewalls oriented in planes that are parallel to each other and orthogonal to the front wall of the panel or sub-panel. The hinge assembly support member can include a frame with a laterally extending segment spanning between right and left upwardly extending side segments. The right and left upwardly extending side segments can be co-planar to respective right and left sidewall planes.

[0029] The hinge assembly can include right and left springs that extend in a longitudinal direction. The right spring can be attached to the right sidewall of the panel or sub-panel and the right upwardly extending side segment of the support member. The left spring can be attached to the left sidewall of the panel or sub-panel and the left upwardly extending side segment of the support member. The springs can thereby bias the panel or sub-panel in a latched position so that the springs attach the panel or sub-panel to the housingto thereby bias the panel or sub-panel in a latched position so the panel or sub-panel remains secured to the housing unless there is a manual action by a user to pull the panel or sub-panel down to open the panel or sub-panel.

[0030] The shaft can be a laterally extending shaft that resides along a bottom portion of the housing attached to opposing, laterally spaced apart housing sidewalls. The panel or

sub-panel can include opposing right and left sidewalls oriented in planes that are parallel to each other and orthogonal to a front facing wall of the panel or sub-panel. A bottom of the panel or sub-panel right and left sidewalls can have an arcuate open channel sized and configured to slidably receive the shaft when in the closed position.

[0031] The panel or at least one sub-panel can be side-by-side dual sub-panels that are releasably attached along inner facing adjacent sides to be able to pivot and slide outward together or separately.

[0032] The sub-panels can engage at least one unit interlock attached to the unit housing to controllably lock and unlock the sub-panels to allow the sub-panels to open from the unit housing only when there is non-conduction.

[0033] Other embodiments are directed to methods of opening a bucket assembly. The methods include: opening a front panel or at least one front sub-panel of a bucket assembly from a closed position to allow access to an interior of the bucket assembly. The opening is carried out by (i) pivoting the front panel or at least one front sub-panel downward about a laterally extending pivot shaft, (ii) sliding the front panel or at least one sub-panel outward away from the pivot shaft, and (iii) further pivoting the front panel or at least one sub-panel to an open position with an upper end of the front panel or at least one sub-panel held at an orientation that is at least 90 degrees rotated from the closed position while the front panel or at least one front sub-panel is slid outward a distance from the pivot shaft.

[0034] The method may include biasing the front panel or at least one sub-panel in a latched position so the panel or sub-panel remains secured to a respective housing unless there is a manual action by a user to pull the panel or at least one sub-panel down to open the panel or sub-panel.

[0035] Further features, advantages and details of the present invention will be appreciated by those of ordinary skill in the art from a reading of the figures and the detailed description of the preferred embodiments that follow, such description being merely illustrative of the present invention.

[0036] It is noted that aspects of the invention described with respect to one embodiment, may be incorporated in a different embodiment although not specifically described relative thereto. That is, all embodiments and/or features of any embodiment can be combined in any way and/or combination. Applicant reserves the right to change any originally filed claim or file any new claim accordingly, including the right to be able to amend any originally filed claim to depend from and/or incorporate any feature of any other

claim although not originally claimed in that manner. These and other objects and/or aspects of the present invention are explained in detail in the specification set forth below.

Brief Description of the Drawings

[0037] **Figure 1** is a partial front perspective view of an exemplary prior art Motor Control Center (MCC).

[0038] **Figure 2** is a top perspective view of an example of a prior art unit of the MCC.

[0039] **Figure 3** is a front, top perspective view of an exemplary unit with a front panel having a telescoping hinge configuration according to embodiments of the present invention.

[0040] **Figure 4** is a front, side perspective view they unit shown in **Figure 3**.

[0041] **Figure 5** is front, side perspective view of the unit shown in **Figure 3**, opposite from the side shown in **Figure 4.**

[0042] **Figure 6A** is a side perspective view of the unit shown in **Figures 3-5**, illustrating a pilot device panel pivoted down from the unit and illustrating components of the telescoping hinge assembly according to embodiments of the present invention.

[0043] **Figures 6B** is an enlarged side perspective view of the pilot device panel and hinge assembly shown in **Figure 6A.**

[0044] **Figure 6C** is an enlarged side perspective view of a portion of the pilot device panel and hinge assembly shown in **Figure 6B**.

[0045] **Figure 7** is an end, perspective view of the pilot panel and hinge assembly shown in **Figure 6A.**

[0046] **Figure 8** is an enlarged opposite side, perspective view of the pilot device panel and hinge assembly shown in **Figure 6B.**

[0047] **Figure 9** is a top perspective view of the side of the pilot device panel shown in **Figure 8** and illustrates an adjacent side of the handle operator panel and hinge assembly according to embodiments of the present invention.

[0048] **Figure 10** is a side, perspective view of the unit shown in **Figures 3** and **4** illustrating a handle operator panel pivoted down from the unit and illustrating components of the telescoping hinge assembly according to embodiments of the present invention.

[0049] **Figures 11A** is an enlarged, opposing side perspective view of the handle operator panel and hinge assembly shown in **Figure 10.**

[0050] **Figure 11B** is an enlarged side perspective view of a portion of the handle operator panel and hinge assembly shown in **Figure 11A**.

[0051] **Figure 12** is an end perspective view of the handle operator panel shown in **Figures 11A** and **11B** according to embodiments of the present invention.

[0052] **Figure 13** is a side, front perspective view of the handle operator and pilot device panels and hinge assembly shown as a sub-assembly apart from the unit housing and illustrating the handle operator in an ON position according to embodiments of the present invention.

[0053] **Figure 14** is a rear perspective view of the sub-assembly shown in **Figure 13** according to embodiments of the present invention.

[0054] **Figure 15** is an end, rear perspective view of the sub-assembly shown in **Figure 13** according to embodiments of the present invention.

[0055] **Figure 16A** is a front view of the device panel held by the shaft according to embodiments of the present invention.

[0056] **Figure 16B** is a rear perspective view of the device panel shown in **Figure 16A**.

[0057] **Figure 16C** is a rear perspective view of the device panel shown in **Figure 16A** but illustrating the panel slid out away from the shaft a distance further than the position in **Figure 16B** according to embodiments of the present invention.

[0058] **Figure 17** is a partial exploded view of the panel and hinge assembly according to embodiments of the present invention.

[0059] **Figures 18A** and **18B** are rear, side perspective views of exemplary panels with an alternate embodiment of the hinge assembly (shown without the pivot/hinge shaft) that includes a slider block for the arms of the hinge assembly according to embodiments of the present invention. **Figure 18A** illustrates the panel slid outward (above the shaft) while **Figure 18B** illustrates the panel in a "closed" to unit position according to embodiments of the present invention.

[0060] **Figure 19A** is a side perspective view of the embodiment shown in **Figures 18A** and **18B**.

[0061] **Figure 19B** is a rear perspective view of the embodiment shown in **Figures 18A** and **18B**.

[0062] **Figure 20** is a partial exploded view of the panel and hinge assembly shown in **Figures 18A** and **18B** according to embodiments of the present invention.

[0063] **Figures 21A** and **21B** are section views of the side of the panel shown in **Figures 18A** and **18B** according to embodiments of the present invention. **Figure 21A** shows the panel slid outward (raised as shown) a distance above the position shown in **Figure 21B**.

[0064] **Figure 22** illustrates that the bucket/unit may be configured to have dual handle operators that can be held on a single panel or dual panels with the telescoping hinge assemblies according to some embodiments of the present invention.

[0065] **Figure 23** illustrates that the bucket/unit and a unit interlock which engages the front hinged panel and which is controlled by a controller for interlock control according to embodiments of the present invention.

[0066] **Figure 24** illustrates a front perspective view of the bucket/unit showing the telescoping hinge assembly with a single panel that holds either a plurality of handle operators or a handle operator and pilot devices according to embodiments of the present invention.

[0067] **Figure 25** is a side, front perspective view of a bucket/unit illustrating dual panels that can be locked together to pivot and telescopically slide outward in concert according to embodiments of the present invention.

[0068] **Figure 26** is a partial exploded view of an exemplary unit illustrating components of an exemplary operator mechanism according to some embodiments of the present invention.

[0069] **Figure 27** is a flow chart of operations that can be used to open a panel or sub-panel of a bucket assembly (e.g., "bucket" or "unit") according to embodiments of the present invention.

Detailed Description of Embodiments of the Invention

[0070] The present invention now will be described more fully hereinafter with reference to the accompanying drawings, in which illustrative embodiments of the invention are shown. Like numbers refer to like elements and different embodiments of like elements can be designated using a different number of superscript indicator apostrophes (*e.g.*, **10, 10', 10'', 10'''**).

[0071] In the drawings, the relative sizes of regions or features may be exaggerated for clarity. This invention may, however, be embodied in many different forms and should not be construed as limited to the embodiments set forth herein; rather, these embodiments

are provided so that this disclosure will be thorough and complete, and will fully convey the scope of the invention to those skilled in the art.

[0072] It will be understood that, although the terms first, second, etc. may be used herein to describe various elements, components, regions, layers and/or sections, these elements, components, regions, layers and/or sections should not be limited by these terms. These terms are only used to distinguish one element, component, region, layer or section from another region, layer or section. Thus, a first element, component, region, layer or section discussed below could be termed a second element, component, region, layer or section without departing from the teachings of the present invention.

[0073] Spatially relative terms, such as "beneath", "below", "lower", "above", "upper" and the like, may be used herein for ease of description to describe one element or feature's relationship to another element(s) or feature(s) as illustrated in the figures. It will be understood that the spatially relative terms are intended to encompass different orientations of the device in use or operation in addition to the orientation depicted in the figures. For example, if the device in the figures is turned over, elements described as "below" or "beneath" other elements or features would then be oriented "above" the other elements or features. Thus, the exemplary term "below" can encompass both an orientation of above and below. The device may be otherwise oriented (rotated 90° or at other orientations) and the spatially relative descriptors used herein interpreted accordingly.

[0074] The term "Figure" is used interchangeably with the abbreviated forms "FIG." and/or "Fig." in the text of the specification and drawings.

[0075] The term "about" refers to numbers in a range of +/-20% of the noted value.

[0076] As used herein, the singular forms "a", "an" and "the" are intended to include the plural forms as well, unless expressly stated otherwise. It will be further understood that the terms "includes," "comprises," "including" and/or "comprising," when used in this specification, specify the presence of stated features, steps, operations, elements, and/or components, but do not preclude the presence or addition of one or more other features, steps, operations, elements, components, and/or groups thereof. It will be understood that when an element is referred to as being "connected" or "coupled" to another element, it can be directly connected or coupled to the other element or intervening elements may be present. As used herein, the term "and/or" includes any and all combinations of one or more of the associated listed items.

[0077] Unless otherwise defined, all terms (including technical and scientific terms) used herein have the same meaning as commonly understood by one of ordinary skill in the

art to which this invention belongs. It will be further understood that terms, such as those defined in commonly used dictionaries, should be interpreted as having a meaning that is consistent with their meaning in the context of this specification and the relevant art and will not be interpreted in an idealized or overly formal sense unless expressly so defined herein.

[0078] The terms "bucket assembly", bucket" and "unit" are used interchangeably and refer to a structure (typically having sides of a protective metal shell) that contains either a switch with a fuse or a circuit breaker for turning power ON and OFF to a motor, or feeder circuit, typically for controlling power to motor starters.

[0079] The bucket or unit can be a feeder unit or a starter unit. The bucket can include other components such as a power transformer, a motor starter to control a single motor and PLCs (programmable logic controllers), drives and the like. The bucket can be configured as a modular device to allow the internal components to be assembled as a unit that can be easily installed into a Motor Control Center (MCC) compartment. As is well known, the bucket **10** can have a bus grid with "power stabs" in the back that connect to bus bars **152** (**Figure 2**) that carry power (current) to the compartments of a vertical section in an MCC cabinet **100** (**Figure 1**). The bus bars can be connected to larger horizontal bus bars that bring power to the vertical sections. The horizontal bus bars are usually in the top, but some MCC designs may have them in the center or bottom. The bucket or unit may be configured to be a removable modular unit capable of being installed behind individual or combined sealed doors on the motor control center enclosure. The unit may contain various motor control and motor protection components such as motor controllers, starters, contactor assemblies, overload relays, circuit breakers, motor circuit protectors, various disconnects, and similar devices for electric motors. The unit can be configured to connect to a common power bus of the motor control center and conduct supply power to the line side of the motor control devices for operation of motors or feeder circuits.

[0080] A "feeder unit" refers to a motor control center unit for supplying feeder circuits. A feeder unit may have one or more feeders or power supply lines to supply feeder circuits or devices. A feeder unit (also called a "feeder") can have a "line side", which refers to the side of the feeder configured to be directly or indirectly connected to the common power bus of the motor control center. A feeder can also have a "load side", which refers to the side of the feeder configured to be connected to and deliver current to a feeder circuit. A feeder may comprise a circuit breaker, a fuse and disconnect switch, or another configuration. The terms "feeder circuit" and "feeder device" are used interchangeably and are intended to mean circuits or devices connected to feeder units or "feeders".

[0081] A "circuit breaker", "breaker", "molded case circuit breaker", or "MCCB" is a device designed to open and close a circuit, typically allowing both manual open and close operation and automatic circuit interruption, the latter to open a circuit under certain conditions, e.g., an over-current. The circuit breaker can be for a motor starter unit or feeder unit, for example.

[0082] The terms "motor", "load", and "load device" are used interchangeably and are intended to mean devices bearing electrical load that are connected to and controlled by the motor control center. Load devices are typically motors but may also be pumps or other machinery that may comprise motors or pumps. Load devices may be connected to starter units.

[0083] The terms "operating mechanism" and "operator mechanism" are used interchangeably and refer to an assembly for opening and closing separable main contacts in a circuit breaker or for turning power ON and OFF using a switch associated with a fuse as a disconnect.

[0084] MCCs usually have a wire way for wires from respective units **10** to the motors and other loads and control wires. U.S. Patent Application Publication 2013/0077210 describes an MCC with both right and left side wireways, the contents of which are hereby incorporated by reference as if recited in full herein. The wireways are typically provided as an enclosed space in an MCC cabinet proximate but outside stacked units. MCCs can be configured in many ways. Each compartment can have a different height to accept different frame sizes of respective bucket assemblies or units **10**, typically in about 6-inch increments. The vertical bus can be omitted or not run through the full height of the section to accommodate deeper buckets for larger items like variable frequency drives. The MCC can be a modular cabinet system for powering and controlling motors or feeder circuits. Several may be powered from main switchgear which, in turn, gets its power from a transformer attached to the incoming line from the power company. A typical MCC cabinet is an enclosure with a number of small doors arranged in rows and columns along the front. The back and sides are typically flat and mostly featureless. The buckets can be provided in varying sizes. For starter units, the size can be based on the size of the motor they are controlling. The bucket assembly can be configured to be relatively easily removable for repair, service or replacement. MCCs can have regular starters, reversing starters, soft start, and variable frequency drives. MCCs can be configured so that sections can be added for expansion if needed. The buckets or units **10** of a motor control center **100** can have the same or different configurations.

[0085] The terms "right side" and "left side" refer when the unit or MCC is viewed from the front, e.g., the front is associated with the unit **10** orientation shown in **Figures 3** and **4**, for example, with a handle operator **20h** facing forward as shown in **Figures 3** and **4**. A respective unit **10** may include a single operator handle **20h** or a plurality of operator handles **20h**, typically a single one on the right side of the panel **122** or sub-panel **122s** or one on the left side of the panel **122** or sub-panel **122s** or a single one on the right side and a single one on the left side of a respective panel **122** or subpanel **122s**.

[0086] The term "compact" refers to units **10** held in a condensed configuration (package) relative to conventional units/buckets. The MCC structure or cabinet **100** (**Figure 1**) can be designed to receive multiple bucket units **10** ranging in various defined sizes. The units **10** can be provided in package or frame sizes of about 6 inches to about 72 inches (tall) with substantially common depth and width dimensions, known as 1X (6 inches) to 12X (72 inches) sizes. The sizes can be in single X increments, from 1X, 2X, 3X, 4X, 5X, 6X, 7X, 8X, 9X, 10X, 11X and 12X. Thus, a 5X MCC unit **10** can be about 30 inches tall. The frame sizes can be provided for a plurality of amperages, including a plurality of: 125A, 150A, 225A, 250A, 400A, 600A, 1200A and 2000A, for example. A unit **10** is typically about 7 inches deep but larger or smaller sizes may be appropriate in some embodiments.

[0087] Embodiments of the invention provide the handle operators **20h** as rotary handles rather than conventional UP/Down handles found on conventional units such as, for example, the Freedom 2100 MCC from Eaton, Corporation, as is well known.

[0088] **Figures 3-13** illustrate examples of a unit **10** with a single rotary handle operator **20h**. However, the unit **10** may also include more than one handle operator as shown, for example, in **Figure 22**.

[0089] In some embodiments, as shown in **Figures 3-13**, for example, the rotary handle operator **20h** can have a long handle configuration so that the handle has a lever and/or extension **20e** that extends a length beyond a perimeter of a circle associated with the rotating part of the operator handle **20h**. The "long" handle version of a handle operator **20h** can provide additional torque control for some applications.

[0090] **Figure 22** illustrates a "short" handle version which has a substantially circular configuration, e.g., no extension lever required. An intermediate length handle may also be used for some embodiments (not shown).

[0091] Referring to **Figure 13**, the length of the lever of the handle **20h** can be sufficient to place an inner end of the lever **20i** adjacent (or even over) the device panel or pilot devices held on the device panel. With prior panel configurations, there is a potential

interference issue for units **10** that have long rotary handle operators **20h** for pilot devices that are mounted on an adjacent landscape-oriented device panel when the operator handle **20h** is rotated so that its extension or lever is in a horizontal ON position (IEC convention). **Figure 13** illustrates the exemplary OFF position.

[0092] The term "pilot device" refers to various control input members and/or indicating light devices. The pilot devices can include pilot control devices, indicating lights, user inputs such as push buttons and/or selector switches and the like. There are many different variations that can be used as is well known to those of skill in the art.

[0093] The unit **10** can include a unitary single panel **122** (**Figure 24**) or (typically dual) adjacent sub-panels **122s** (**Figures 3-13**, for example).

[0094] Where sub-panels are used rather than a unitary panel **122** (**Figure 24**), each sub-panel **122s** can hold a handle operator **20h** or one sub-panel can hold one or more handle operators **20h** and the other can hold pilot devices **200** (**Figure 13**). The sub-panel **122** that holds the pilot devices **200** (**Figure 13**) can include at least one pilot device aperture **201** that allows the corresponding pilot device to allow the front of the device **200** to extend through the sub-panel **122s** to expose a front face of a respective pilot device. As shown in **Figures 3-13**, there can be six, two columns of three, pilot device apertures **201**, but less or more than six may be used. Other arrangements of the pilot devices **200** and apertures **201** may also be used. Thus, while six devices **200** and respective holding or receiving apertures **201** are shown, the device sub-panel **122s** can be configured with more or less apertures and hold more or less control input members and/or indicating lights, for example.

[0095] Referring to **Figures 3-13**, embodiments of the present invention configure the unit **10** with a hinge assembly **50** that is configured with at least one laterally extending shaft **52** that typically resides along the bottom of the unit **10** to allow the panel **122** or each sub-panel **122s** to (i) swing down about a laterally extending hinge axis A-A that extends axially through an axially extending centerline of the shaft **52** as shown in **Figures 6A** and **11A** and (ii) slide raidally with respect to the shaft **52**, e.g., outwardly away from the unit housing **10h**, in no required order. This can be described as a "telescoping" hinge assembly **50**.

[0096] Typically, the panel **122** or sub-panel **122s** is pivoted open to less than 90 degrees, then slid outward from the shaft **52** and pivoted open a further amount to allow the panel/sub-panel to open at least 90 degrees, even when held adjacent an underlying unit **10**. Although shown as a single shaft **52** that extends across each sub-panel **122s**, more than one shaft can be used, such as a first shaft for the first sub-panel **122s** and a second shaft for the

second sub-panel **122s**. Although the shaft **52** is shown as being cylindrical, other shapes may be used.

[0097] Also, although shown as extending across the bottom **10b** of a respective unit or bucket **10**, the hinge assembly **50** may be configured with the shaft **52** along a side or up and down across a unit to allow for telescoping opening about a vertical axis rather than horizontally (not shown). It is also contemplated that for certain non-MCC uses, the shaft **52** may be along the top rather than the bottom of the housing.

[0098] Referring to **Figures 6A** and **6B**, the hinge assembly **50** can include a support member **51** that can include laterally spaced apart first and second slide arms **55a, 55b** that can be slidably attached to respective opposing sides (e.g., right and left sides) of a sub-panel **122s** or a unitary panel **122** (**Figure 24**). The first and second arms **55a, 55b** can slidably extend and retract in respective spaced apart right and left slots **124** formed in or attached to the right and left side walls **122w** of the sub-panel **122s** or panel **122** to allow the sub-panel **122s** or panel **122** to slide outwardly away from the shaft **52**. The slots **124** can reside in a sidewall **122w** that is in a plane that is perpendicular to the front face of the panel **122f**. The rod **52** can extend through apertures **51a** in the support member **51**.

[0099] Additionally or alternatively, in some embodiments, the slide arms **55a, 55b** can be fixedly attached to the panel **122** or sub-panel **122s** and the support member **51** (e.g, frame or other mounting attachment member) attached to the shaft **52** can have longitudally extending slots (extending in a direction perpendicular to the axially extending centerline (A-A axis) of the shaft **52**) that allow the panel-mounted slide arms **55a, 55b** to slide in the slots in or on the support member (not shown), again to allow the panel **122** or sub-panel **122s** to slide radially with respect to the shaft, e.g., away from the shaft **52** to open.

[00100] The first and second arms **55a, 55b** of the hinge assembly **50** can include one or more attachment members **155** that attach the respective arms **55a, 55b** to the corresponding sidewall **122w** and allow the panel or subpanel **122, 122s** to slide back and forth between a home or retracted position (the bottom of the panel **122/122s** residing over the shaft **52**) to one or more different extension distances for service access. The attachment members **155** can extend through a respective slot **124** to allow the panel or sub-panel **122, 122s** to slide outward a distance away from the pivot shaft **52** and define an open space or gap "g" between the bottom **122b** of the panel or sub-panels **122, 122s** and the shaft **52** as shown, for example, in **Figures 6A, 6B, 8, 10** and **16**.

[00101] The panel **122** and/or sub-panels **122s** can be configured to slide out a distance from the housing sidewall **10s** and/or pivot shaft **52** that is in a range of between about 0.25

inches to about 3 inches, inclusinve of same. More typically, the distance is between about 0.5 inches and about 1.5 inches, such as 0.5 inches, 0.75 inches, 1 inch, 1.25 inches or 1.5 inches, in some embodiments.

[00102] The sidewall **122w** of the panel **122** or sub-panel **122s** can have a bottom **122b** with an open, typically arcuate, slot **126** that allows the panel or sub-panel **122, 122s** to travel over and receive the shaft **52** when closed. When closed against the unit housing **10h**, this configuration allows the shaft **52** to reside behind the flat front surface **122f** of the panel or subpanel and above the bottom edge **122b** of the panel **122** or respective sub-panel **122s**.

[00103] As shown in **Figures 6A-6C, 10-12** and **17**, the hinge assembly **50** can optionally include a support member **51**, that may be configured as or include a frame **51f** (as more readliy shown in **Figure 17**), that cooperates with the panel **122** and/or sub-panel **122s**. The support member **51** can have a laterally extending segment **51*l*** that resides below the shaft **52** and that includes upwardly extending support member sides **51s** that define or attach to the first and second arms **55a, 55b**. The support member **51** can be configured as the frame **51f**, and, where used, the frame **51f** can be a monolithic unitary "U" shaped member or may have other configurations.

[00104] The support member (e.g., frame) sides **51s** can have an aperture **51a** for the shaft **52**. However, the arms **55a, 55b** and attachment arrangements may have other configurations.

[00105] The hinge assembly **50** can be configured to allow a user to push the panel **122** or sub-panel **122s** downward to de-latch it from the bucket **10**, then pull the panel **122** or sub-panel **122s** outward to allow it to clear an MCC bucket **10** residing below it in a MCC cabinet **100** (**Figure 1**), then swing it open to at least a position of 90-degrees from its closed position on the unit **10**, typically between 90 degrees to 180 degrees from the closed position. Full access to the interior **10i** of the MCC unit **10** behind the respective panel **122** or sub-panel **122** when open allows for servicing interior components of the MCC bucket/unit **10**.

[00106] Referring to **Figure 8,** the hinge assembly **50** can include springs **58**, at least one for each side of the panel **122** or sub-panel **122**. A respective spring **58** can have opposing top and bottom end portions **58t, 58b**, one of which is attached to the panel or sub-panel **122, 122s** and the other end is attached to the arm **55a** or **55b**. The end portions of the springs **58t, 58b** can have hooks or can be attached in any suitable manner. The springs **58** can be configured to bias the panel **122** or sub-panel **122s** toward a closed position. As shown, the bottom of respective springs **58b** is attached to a lower end portion of the adjacent sub-panel side wall **122w** while the top of the spring **58t** is attached to the arm **55a, 55b**.

[00107] In some embodiments, the sub-panels **122s** may be configured to lock together and pivot out in concert to open and/or close as a unitary panel assembly as shown in **Figure 25**. **Figures 13-15** illustrate a panel to panel interlock assembly **130** with an end portion **130** that can extend from one panel across to the other panel **122s** to lock the panels **122s** together.

[00108] **Figures 4, 10** and **12**, for example, illustrate that the unit **10** can include an interlock linkage **70** that extends out of an aperture in an adjacent sidewall **10s** of the unit housing **10h**. The interlock linkage **70** can include a link with one end portion attached to an inwardly extending shaft **25** that, in operation, is connected to the handle operator **20h**. The shaft **25** is also in communication with the operator mechanism **40** of the circuit breaker disconnect **D**. The link can extend straight outward from a respective shaft **25** through the sidewall **10s**. As shown, the interlock linkage **70** is left linkage and has a left link with an end portion that is configured to extend out of a left sidewall of the unit housing when the left operator disconnect handle is in the ON position.

[00109] Referring to **Figures 13-15**, for example, the sub-panels **122s** can be configured as two side-by-side adjacent panels that can open and close independently and also can be locked together to open and close in concert. Thus, in some embodiments, the shaft **52** can extend across the unit **10** to attach to the right and left housing sidewalls **10s** and can be attached to two separate frames **51**, e.g., right and left frames, that can each pivot about the common shaft. Each frame **51** can cooperate with a respective sub-panel **122s** and define or attach to pair of cooperating arms **55a, 55b**.

[00110] **Figures 16A-C** illustrate an exemplary sub-panel **122s** without springs **58** (**Figure 8**). **Figure 16C** shows an exemplary open position of the sub-panel **122s** with the pilot devices have an outer facing end **200f** that extend out of the planar front surface **122f** of the sub-panel **122s**, with the sub-panel **122a** pivoted down and slid outward away from the shaft **52** (typically, the panel is slid outward before pivoting or while pivoting down to avoid interference with adjacent units).

[00111] **Figures 18A-21B** illustrate an alternate embodiment of the hinge assembly **50**. In this embodiment, the arms **55a', 55b'** include a guide **55g** with a body that is sized and configured to attach to the frame side **51s** and extend out of the slot **124** of the panel sidewall **122w**. The guide **55g** can have a shape that corresponds to the perimeter shape of the slot **124** (with a shorter length), e.g., rectangular as shown. However, other shapes may be used. The guide **55g** can be elastomeric and/or polymeric (e.g., plastic) or other material or have a coating that facilitates a suitable slide action.

[00112] As shown in **Figures 20, 21A** and **21B**, the top of the spring **58t** can attach to a spring recess **51r** on a top of the frame side and a bottom of the spring **58b** can attach to an attachment member or surface **122a** in or on the sidewall **122w**. However, other arrangements and configurations can be used. In some embodiments, no biasing is required.

[00113] The spring-loaded hinge assembly **50** can be configured to bias the swing-down pilot device panel **122s** in a latched position so it will remain secured to the bucket **10** even if the access screws are loose – unless there is an independent action to pull the panel down by the user to open the panel **122s**.

[00114] In some embodiments, the panel **122** or sub-panels **122s** can be metal, typically steel, panels (as shown, a left sub-panel for the rotary handle and a right sub-panel for pilot devices). Metal panels **122** or sub-panels **122s** can be configured to provide arc-flash mitigation if an event took place while opening the MCC outer door and/or removing a bucket in an energized MCC lineup.

[00115] The panel **122** and/or sub-panels **122s** can be configured to have enhanced robustness using, for example, metallic panels or sub-panels to inhibit and/or prevent deformation of the doors/panels/sub-panels as well as to inhibit or prevent popping latches during an arc-flash event.

[00116] The panel **122** and/or sub-panels **122s** can be configured to have flush flat steel panels **122, 122s** behind door cutouts which can reduce or minimize fit issues when closing the door – as compared to protruding conventional plastic panels that have to match and fit through associated door cutouts.

[00117] In some embodiments, the panel **122** and/or sub-panels **122s** can be metallic such as steel that can be in contact with a metallic pivot tube as the shaft **52** which can provide an electrical ground path for exposed metallic areas of pilot devices – as opposed to conventional ungrounded pilot devices that are isolated when mounted on a plastic device panel.

[00118] The MCC **100** can be configured so that the MCC has a more robust door **22** made from heavy gauge steel with stronger latches and hinges and an extra end chamber to contain an energy blast to meet conventional short circuit testing of MCC products to these levels of explosive pressure wave inside the MCC.

[00119] In some embodiments, the MCC can be configured to be an arc resistant product that can comply with IEEE C37.20.7 guidelines, which do not presently cover MCCs. As is well known to those of skill in the art, the C37.20.7 criteria is to protect

someone that is by chance standing by the MCC during an arcing event, but is not directed to users working on the unit or MCC.

[00120] The new arc resistant robustness can be facilitated by the use of steel panels **122** and/or sub-panels **122s**. Conventional device panel are plastic. The new arc resistant door **22** (**Figure 1**) can be formed from 12 gauge (0.093 inches) steel in contrast to conventional 14 gauge (0.067 inches) with a strength that may have a 3X relationship to thickness. The new panels **122, 122s** can increase the robustness of the unit door arrangement.

[00121] The unit **10** can be configured with a panel and/or sub-panel interlock so that the handle disconnect is in the OFF position before allowing the user to open the panel **122** or sub-panel **122s**.

[00122] It is also noted that while particularly suitable for units or bucket assemblies **10** of motor control centers, the panels/sub-panels with telescoping hinges may be useful for other housings with circuit breakers and the like.

[00123] Referring to **Figure 22**, in some embodiments, the bucket assembly or unit **10** has a dual feeder and/or starter configuration. The dual feeder and/or starter unit **10** can include respective right and left handles **20h** attached to a respective shaft **25** of a corresponding disconnect **D** such as a disconnect operator mechanism **40** (**Figures 10, 26**). The bucket assembly or unit **10** can be configured for DC (direct current) or AC (alternating current) operation. The bucket assembly **10** can have a metal enclosure, frame or housing **10h** with sidewalls **10s**.

[00124] In some embodiments, the bucket assembly **10** can comprise a molded case circuit breaker **10c**. Molded case circuit breakers are well known to those of skill in the art, as exemplified by U.S. Patent Nos. 4,503,408 and 5,910,760, the contents of which are incorporated herein by reference as if recited in full herein. In other embodiments, the bucket assembly **10** can be configured to house a fused disconnect switch to turn power on and off. In some embodiments, the MCC cabinet **100** (**Figure 1**) can hold both a disconnect switch and circuit breaker type units **10** and each can have a standardized rotary handle **20h** that controls the internal components for power on/off operation.

[00125] **Figure 22**, for example, illustrates that the unit **10** has a stab isolating portal **43** residing above the handle operator **20h** or handle operators **20h**. The unit **10** may have a retractable stab. *See, e.g.*, co-pending, U.S. Patent Application Serial Number 14/318,971, the contents of which are hereby incorporated by reference as if recited in full herein.

[00126] **Figures 3** and **13** illustrate exemplary respective ON and OFF orientations of the rotary handle **20h**. Thus, in operation, the pre-defined orientation of the rotary handle **20h** with respect to operation status can provide a visual indication to a user-operator of the conduction status of the disconnect d, e.g., breaker or switch disconnect (optionally with a fuse) being ON/OFF.

[00127] The term "ON" with respect to handle position/orientation refers to the associated feeder or starter of the unit **10** having conduction with the operator disconnect closed (circuit breaker closed or fused switch being ON/switch closed). The term "OFF" with respect to handle position/orientation refers to the associated feeder or starter of the unit **10** having no conduction with the disconnect open (circuit breaker open or disconnect switch OFF/switch open).

[00128] In some embodiments, if the handle **20h** is in a generally horizontal position, i.e., with a center lever **21** (shown as with text of "push to rotate" associated with a pop-out lever) straight across the front of the circuit breaker as shown in **Figure 13**, this orientation can be the OFF position and can be visually used as an indication that the contacts of the circuit breaker are open and that current is blocked. If the handle **20h** is rotated from the orientation shown in **Figure 13**, e.g., rotated 90 degrees (typically clockwise from the orientation in **Figure 13**), then an indication is given that the circuit contacts are closed. Where the unit **10** includes a breaker, the breaker trip position can be at about 45 degrees mid-point between ON and OFF. However, as noted above, the handles **20h** may have other configurations and are not required to be rotating handles and may use other angular orientations for ON and/or OFF. The embodiment shown in **Figure 13** can be configured to have a "push" to pop out configuration whereby an aperture **20a** is exposed to allow a physical lock to be attached to an end of an arm of the lever **21** of the handle **20h**. For further description of this exemplary handle configuration, *see*, U.S. Patent Application Serial No. 14/524,585, the contents of which are hereby incorporated by reference as if recited in full herein.

[00129] **Figure 22** illustrates that the unit **10** can have at least one laterally slidable shutter **75** with a portal. When the portal is aligned with the isolation portal **43**, external access to the portal **43** is allowed. When the portal of the shutter is left or right of the portal **43**, the shutter body resides over and blocks the portal **43**. The shutter **75** can reside behind a panel **76** with an aperture **43a** aligned with the access portal **43**. **Figure 22** also illustrates that the unit **10** can have a FLASHGARD interlock **L** typically via the top surface of the unit.

[00130] As shown by **Figures 22** and **23**, for example, the operator handle **20h** can be attached to an inwardly extending shaft **25**. The shaft **25** can hold the interlock linkage **70** and at least one cam **80**. The shaft **25** can be part of the operator disconnect mechanism **D**, **40** (**Figure 19**, for example). Each of the right and left side cams **80** can be configured to move the at least one shutter **75** both right to left and left to right.

[00131] In some embodiments, the cam **80** can reside closer the front of the unit **10**, e.g., closer to the handle **20h** than the linkage **70**. The cam **80** can have a plurality of radially-outwardly extending, circumferentially spaced apart arms **80a** ("circumferentially" is used broadly to describe spacing about the shaft **25**, recognizing that the shaft **25** may have a non-circular shape), at least one of which pushes the at least one shutter **75** to slide left and at least a different other at least one pushes the at least one shutter **75** to slide right. The cam **80** may have a curvilinear cam profile, e.g., with a curvature configured with outer lobes and a valley(s) rather than or in addition to the straight arms **80a** to control movement of the at least one shutter **75** (not shown).

[00132] In some embodiments, the angular spacing **α** between the cam arms **80a** on a respective shaft **25** can be between about 45-135 degrees, typically about 90 degrees. In some embodiments, the arms **80a** are orthogonal to each other as shown in **Figure 23**. The angular spacing can substantially correspond with the angular spacing between ON and OFF for a respective handle **20h** orientation.

[00133] The shutter **75** can have a lower portion **75e** that can contact the cam **80** when the handle **20h** is in the defined positions to move into the appropriate aligned position: (i) with the shutter portal aligned with the portal **43** to open the access portal **43** or a misaligned position and (ii) with the shutter portal laterally offset from the portal **43** to block portal **43** access.

[00134] The lower portion **75e** can be referred to as a "cam follower". The cam follower **75e** moves linearly and is not required to always be in contact with the cam **80**. In some embodiments, the cam **80** is configured so that in the ON position, one arm contacts the cam follower **75e** and in the OFF position, the other arm contacts the cam follower. The cam follower **75e** may extend outwardly away from a plane associated with the shutter primary body, typically horizontally. The cam follower may extend substantially horizontally toward the front of the unit **10** or substantially horizontally toward the rear of the unit **10** and may have a different configuration. The cam follower **75e** can comprise a horizontally extending protrusion or ledge that can provide assembly tolerance so as to be able to consistently engage the drive portion of a respective cam **80** held on the shaft **25** despite build tolerances.

The lateral stroke distance of the shutter **75** and/or lower portion of the shutter **75e** in each direction, right to left and/or left to right to open/close the access path to the portal **43** can be between about 0.25 inches to about 3 inches, more typically between about 1 inch to about 2 inches.

[00135] The cam **80** can be provided as a monolithic single piece body or may be provided as discrete closely spaced components held by the shaft **25** in a proper orientation to cause the respective sliding left and right lateral movement of the shutter **75**.

[00136] The interlock linkage **70** can pivotably attached to a short outwardly extending link **71** via joint **70j** with the link **71** being shorter than the lever arm **72** of the linkage **70** (**Figure 23**) and is typically shorter than the cam arms **80a**. The linkage **70** is typically fully extended (horizontal or substantially horizontal) in the ON position to extend out of the sidewall **10s** and is retracted so as to be pivoted downward or upward in the OFF position.

[00137] In some embodiments, a monolithic shaped (typically rigid metal) member can define both the short link **71** and at least one of the cam arms **80a** as shown in **Figure 18**, for example.

[00138] The unit **10** can be configured with an interlock that ensures that the unit disconnect **D** (e.g., breaker) is OPEN before allowing the unit stabs **S** (**Figure 25**) to be racked in or out, and when the disconnect **D** (breaker) is closed, the interlock is configured so that the stabs **S** must remain closed. The racking system can be configured as a slow break contact arrangement and is not typically designed to breaker the electrical current.

[00139] As shown in **Figure 23**, for example, the unit or bucket **10** can optionally be configured to engage one or more unit interlocks **93**. The unit interlock **93** can be in communication with an electronic controller **193** that controls the release or the interlock **93**. The interlock **93** may include an automated clamp or latch **93c** that holds the lower end of the panel **122** or sub-panels **122s**, and may include a latch **93*l*** that extends out of the sidewall **10s** to prevent the panel(s) from pivoting when the interlock is engaged.

[00140] As shown in **Figure 26**, the unit **10** can include a disconnect **D** such as a molded case circuit breaker (MCCB) or disconnect switch, one or both of which can be operated by an internal operating handle mechanism **40** commonly called the "op-mech" or "operator mechanism" or "disconnect operator". The disconnect switch can include an integrated fuse or may be connected to a fuse, in some embodiments. This op-mech **40** can be configured to mount over the lever **190**, e.g., a breaker's integral lever and/or an ON/OFF switch lever of disconnect switch. The op-mech **40** allows a user to operate the circuit breaker **10C** or switch with the door **22** of the motor control center unit **10** closed. The door

22 and/or handle **20h** itself can include visual indicia **I** (**Figures 3, 4, 13**), e.g., text and/or color, that identifies an operational status by position, e.g., Reset "R", OFF, TRIPPED and ON. The TRIPPED indicia may be omitted for fuse systems. It is noted that for ease of discussion, the dual feeders are used by way of example. However, a respective feeder can be replaced with a starter and any unit **10** can include two starter circuits, two feeder circuits or a starter and a feeder, for example.

[00141] For a circuit breaker configuration, the handle **20h** can move between circuit breaker conduction to circuit breaker non-conduction. Where a rotating handle is used, typically, there is about a 90° rotation from conduction to non-conduction ("OFF" to "ON") but other defined rotational stroke distances may be used including, for example, about 45 degrees, about 120 degrees, or about 180 degrees. For a fused disconnect, a similar rotation can be used to cause the ON/OFF.

[00142] As shown in **Figure 19**, for example, the operator mechanism **40** can include a drive gear **142**, a pinion gear **144**, and an operator rack gear **146**. Generally summarized, the handle **20h** via shaft **25** is keyed to interface with the rotary drive gear **142**. Drive gear **142** interacts mechanically with pinion gear **144**. Pinion gear **144** also interacts with the linearly translating moveable rack **146**. Consequently, as the handle **20h** rotates, because it is interlocked with the drive gear **142**, the drive gear **142** rotates on its axis, thus rotating the pinion gear **144**, which then linearly moves the rack **146**. The rack **146** then moves the operator slider **152** over operator base **150** which moves to trip lever **190** as the handle **20h** moves. The operator base **150** can be stationary and affixed to an inner housing. The base **150** can have a horizontally oriented elongate slot **150s** that is aligned with a smaller slot **152s** in the operator slider **152**. The slots **150s**, **152s** cooperate to hold lever **190** (toggle) and when the operator slider with slot **152s** moves to the right (based on rotation of the handle **20h**, for example), this moves the lever **190** to the right along the path defined by slot **150s**. It is noted that the lever **190** (also known as a toggle) can move laterally as shown or the circuit breaker or fuse switch may be oriented to move vertically.

[00143] The base **150** and cooperating slider **152** can be provided in different sizes with different length and width slots **150s** to accommodate smaller and larger toggles or switches associated with frames of different sizes/amperage rating.

[00144] For fused switch disconnects, the gear **142** in communication with a rack gear **146** may optionally be configured to move up and down or orthogonal to the rack gear **146**. This movement can engage and move a fuse switch lever or input, up and down for ON/OFF operation. Exemplary fuses are FUSETRON™ 600V Class RK5 fuses (BU-SB13729)

available from Cooper Bussmann Company, St. Louis, MO. However, the design is flexible and can accommodate other fuses including those in different classes.

[00145] Referring again to **Figure 19**, for units **10** with circuit breakers **10C**, the operating mechanism **40** can also include a trip assist spring **143** that is in communication with the rack gear **146** to assist the handle **20h** to move to a consistent OFF position when the circuit breaker is tripped. For additional description of an example of an operator mechanism and components thereof, *see, e.g.*, For additional description of an example of an operator mechanism and components thereof for fused disconnects, see, e.g., U.S. Application Serial No. 14/501,969, the contents of which are hereby incorporated by reference as if recited in full herein.

[00146] **Figure 27** illustrates exemplary operational steps that can be used to open a panel of a bucket. As shown, a handle operator and/or pilot device panel or sub-panel of a bucket assembly can be slid outward a distance from a pivot shaft attached to the bucket assembly while the panel or sub-panel remains in communication with the pivot shaft (block **200**). The panel or sub-panel can be pivoted (rotated) about the pivot shaft to open to at least 90 degrees from its closed position after or during the sliding action (block **220**).

[00147] The panel or sub-panel can be de-latched from the bucket assembly before sliding the panel or sub-panel while in a closed position on a bucket assembly (block **202**).

[00148] The panel or sub-panel can be configured as dual side-by- side sub-panels that are attached to a common pivot shaft that can be selectively (i) opened in concert or (ii) opened independently (block **205**).

[00149] The panel or sub-panel can be configured as dual side-by-side steel sub-panels with a flat front surface that are attached to a common pivot shaft and the sub-panels can have different widths (block **207**).

[00150] The panel or sub-panel can be configured as dual side-by- side sub-panels that are metallic and that are attached to a common metal pivot shaft that provides an electric ground for pilot devices held by the panel or sub-panel (block **210**).

[00151] The pivoting can be downward to open to at least 90 degrees from its closed position after or during the sliding action (block **215**).

[00152] The pivot shaft can be part of a hinge assembly with cooperating pairs of slide arms that allow the panel or sub-panel to slide in slots in the sidewall of the panel or sub-panel (block **217**).

[00153] The panel or sub-panel can be configured as dual side-by-side sub-panels that are attached to a common pivot shaft that supports two spaced apart frames with frame sides

that cooperate with sides of respective sub-panels to (i) provide slide arms that slide in slots on the panel or side panel or (ii) provide slots that allow slide arms attached to sides of sub-panels to travel, to extend and retract each sub-panel (block **219**) so that the panel/sub-panel can slidingly extend away from the pivot shaft and retract back toward the pivot shaft for the home or closed position.

[00154] The foregoing is illustrative of the present invention and is not to be construed as limiting thereof. Although a few exemplary embodiments of this invention have been described, those skilled in the art will readily appreciate that many modifications are possible in the exemplary embodiments without materially departing from the novel teachings and advantages of this invention. Accordingly, all such modifications are intended to be included within the scope of this invention. Therefore, it is to be understood that the foregoing is illustrative of the present invention and is not to be construed as limited to the specific embodiments disclosed, and that modifications to the disclosed embodiments, as well as other embodiments, are intended to be included within the scope of the invention.

That Which Is Claimed Is:

1. A bucket assembly comprising:

a housing;

a telescoping hinge assembly comprising at least one shaft attached to the housing; and

a panel or at least one sub-panel holding at least one handle operator and/or pilot devices pivotably attached to the telescoping hinge assembly so that the panel or sub-panel is configured to (i) pivot about the at least one shaft to swing open from a closed position and (ii) slide outward in a direction away from the at least one shaft.

2. The bucket assembly of Claim 1, wherein the panel or at least one sub-panel includes opposing right and left sidewalls oriented in a plane that is orthogonal to a front facing primary wall of the panel or at least one sub-panel, wherein the at least one shaft comprises a laterally extending shaft that resides along a bottom portion of the housing attached to opposing, laterally spaced apart housing sidewalls, and wherein the telescoping hinge assembly further comprises slide arms that slide in longitudinally extending slots in or co-planar with the panel or respective sub-panel sidewall planes to allow the panel or sub-panel to slide in a radial direction relative to the at least one shaft outward away from the laterally extending shaft to open and back toward the laterally extending shaft to the closed position.

3. The bucket assembly of Claim 1, wherein the at least one shaft comprises a single laterally extending shaft that resides along a bottom portion of the housing, wherein the telescoping hinge assembly includes a support member attached to the laterally extending shaft, and wherein the support member comprises laterally spaced apart side segments that cooperate with the panel or at least one sub-panel, arranged so that, in the closed position, the support member side segments extend upwardly away from the laterally extending shaft.

4. The bucket assembly of Claim 1, wherein the panel or sub-panel includes a front wall and opposing right and left sidewalls oriented in planes that are parallel to each other and orthogonal to the front wall of the panel or sub-panel, wherein the telescoping hinge assembly comprises a support member with a laterally extending segment spanning between right and left upwardly extending side segments, and wherein the right and left upwardly

extending side segments are co-planar to corresponding planes of the right and left sidewalls of the panel or sub-panels.

5. The bucket assembly of Claim 4, wherein the hinge assembly comprises right and left springs that extend in a longitudinal direction, wherein the right spring is attached to the right sidewall of the panel or a respective sub-panel and the right upwardly extending side segment of the support member, and wherein the left spring is attached to the left sidewall of the panel or respective sub-panel and the left upwardly extending side segment of the support member to thereby bias the panel or respective sub-panel in a latched position whereby the springs that attach the panel or at least one sub-panel to the housing bias the panel or sub-panel in a latched position so the panel or sub-panel remains secured to the housing unless there is a manual action by a user to pull the panel or sub-panel down to open the panel or sub-panel.

6. The bucket assembly of Claim 4, wherein the hinge assembly comprises right and left slide arms that slidably travel back and forth in longitudinally extending slots in or co-planar with a corresponding right and left sidewall plane of the panel or respective sub-panel.

7. The bucket assembly of Claim 1, wherein the at least one shaft comprises a laterally extending shaft that resides along a bottom portion of the housing attached to opposing, laterally spaced apart housing sidewalls, wherein the panel or at least one sub-panel includes opposing right and left sidewalls oriented in planes that are parallel to each other and orthogonal to a front facing wall of the panel or at least one sub-panel, and wherein a bottom of the right and left sidewalls of the panel or at least one sub-panel have an arcuate open channel sized and configured to slidably receive the shaft when in the closed position.

8. The bucket assembly of Claim 1, wherein the at least one shaft comprises a laterally extending shaft attached to the housing, wherein the panel or at least one sub-panel is configured as dual adjacently positioned sub-panels with flat front surfaces with the dual sub-panels configured as a handle operator panel and a pilot device panel, and wherein the pilot device panel and the handle operator panel are metallic, and wherein at least the pilot device panel is in abutting contact with the laterally extending shaft when in the closed position to define an electrical ground for pilot devices held by the pilot panel.

9. The bucket assembly of Claim 1, wherein the panel or at least one sub-panel is side-by-side dual sub-panels that are releasably attached along inner facing adjacent sides to be able to pivot outward together or separately, and wherein the sub-panels engage at least one unit interlock attached to the unit housing to controllably lock and unlock the sub-panels to allow the sub-panels to open from the unit housing only when there is non-conduction.

10. A motor control center (MCC) comprising the bucket assembly of Claim 1, wherein the panel or at least one sub-panel is metal.

11. A bucket assembly comprising:

a housing;

a hinge assembly comprising a shaft attached to the housing and a support member configured to pivot about the shaft; and

a panel or at least one sub-panel attached to the support member and configured to slide radially with respect to the shaft to thereby pivot about the at least one shaft and slide outward in a direction away from the at least one shaft to open from a closed position to an open position.

12. The bucket assembly of Claim 11, wherein the panel or at least one sub-panel holds at least one handle operator and/or pilot devices attached to the telescoping hinge assembly so that the panel or sub-panel is configured to

13. The bucket assembly of Claim 11, wherein the panel or at least one sub-panel includes opposing right and left sidewalls oriented in planes that are parallel to each other and orthogonal to a front facing primary wall of the panel or at least one sub-panel, wherein the shaft is a laterally extending shaft that resides along a bottom portion of the housing attached to opposing, laterally spaced apart housing sidewalls, and wherein the hinge assembly support member comprises slide arms that slide in longitudinally extending slots that are in or co-planar to the right and left sidewalls to allow the panel or at least one sub-panel to slide outward in the direction away from the shaft to open and back toward the shaft to the closed position.

14. The bucket assembly of Claim 11, wherein the shaft is a single laterally extending shaft that resides along a bottom portion of the housing, wherein the hinge

assembly support member includes a frame attached to the laterally extending shaft, and wherein the frame comprises laterally spaced apart side segments that cooperate with the panel or at least one sub-panel, arranged so that, in the closed position, the frame side segments extend upwardly away from the laterally extending shaft.

15. The bucket assembly of Claim 11, wherein the panel or sub-panel includes a front wall and opposing right and left sidewalls oriented in planes that are parallel to each other and orthogonal to the front wall of the panel or sub-panel, and wherein the hinge assembly support member comprises a frame with a laterally extending segment spanning between right and left upwardly extending side segments, and wherein the right and left upwardly extending side segments are co-planar to respective right and left sidewall planes.

16. The bucket assembly of Claim 11, wherein the hinge assembly comprises right and left springs that extend in a longitudinal direction, wherein the right spring is attached to the right sidewall of the panel or sub-panel and the right upwardly extending side segment of the support member, and wherein the left spring is attached to the left sidewall of the panel or sub-panel and the left upwardly extending side segment of the support member to thereby bias the panel or sub-panel in a latched position so that the springs attach the panel or sub-panel to the housingto thereby bias the panel or sub-panel in a latched position so the panel or sub-panel remains secured to the housing unless there is a manual action by a user to pull the panel or sub-panel down to open the panel or sub-panel.

17. The bucket assembly of Claim 11, wherein the shaft is a laterally extending shaft that resides along a bottom portion of the housing attached to opposing, laterally spaced apart housing sidewalls, wherein the panel or sub-panel includes opposing right and left sidewalls oriented in planes that are parallel to each other and orthogonal to a front facing wall of the panel or sub-panel, and wherein a bottom of the panel or sub-panel right and left sidewalls have an arcuate open channel sized and configured to slidably receive the shaft when in the closed position.

18. The bucket assembly of Claim 11, wherein the panel or at least one sub-panel is side-by-side dual sub-panels that are releasably attached along inner facing adjacent sides to be able to pivot and slide outward together or separately, and wherein the sub-panels engage at least one unit interlock attached to the unit housing to controllably lock and unlock the sub-

panels to allow the sub-panels to open from the unit housing only when there is non-conduction.

19. A method of opening a bucket assembly, comprising:

opening a front panel or at least one front sub-panel of a bucket assembly from a closed position to allow access to an interior of the bucket assembly, wherein the opening is carried out by (i) pivoting the front panel or at least one front sub-panel downward about a laterally extending pivot shaft, (ii) sliding the front panel or at least one sub-panel outward away from the pivot shaft, and (iii) further pivoting the front panel or at least one sub-panel to an open position with an upper end of the front panel or at least one sub-panel held at an orientation that is at least 90 degrees rotated from the closed position while the front panel or at least one front sub-panel is slid outward a distance from the pivot shaft.

20. The method of Claim 19, further comprising biasing the front panel or at least one sub-panel in a latched position so the panel or sub-panel remains secured to a respective housing unless there is a manual action by a user to pull the panel or at least one sub-panel down to open the panel or sub-panel.

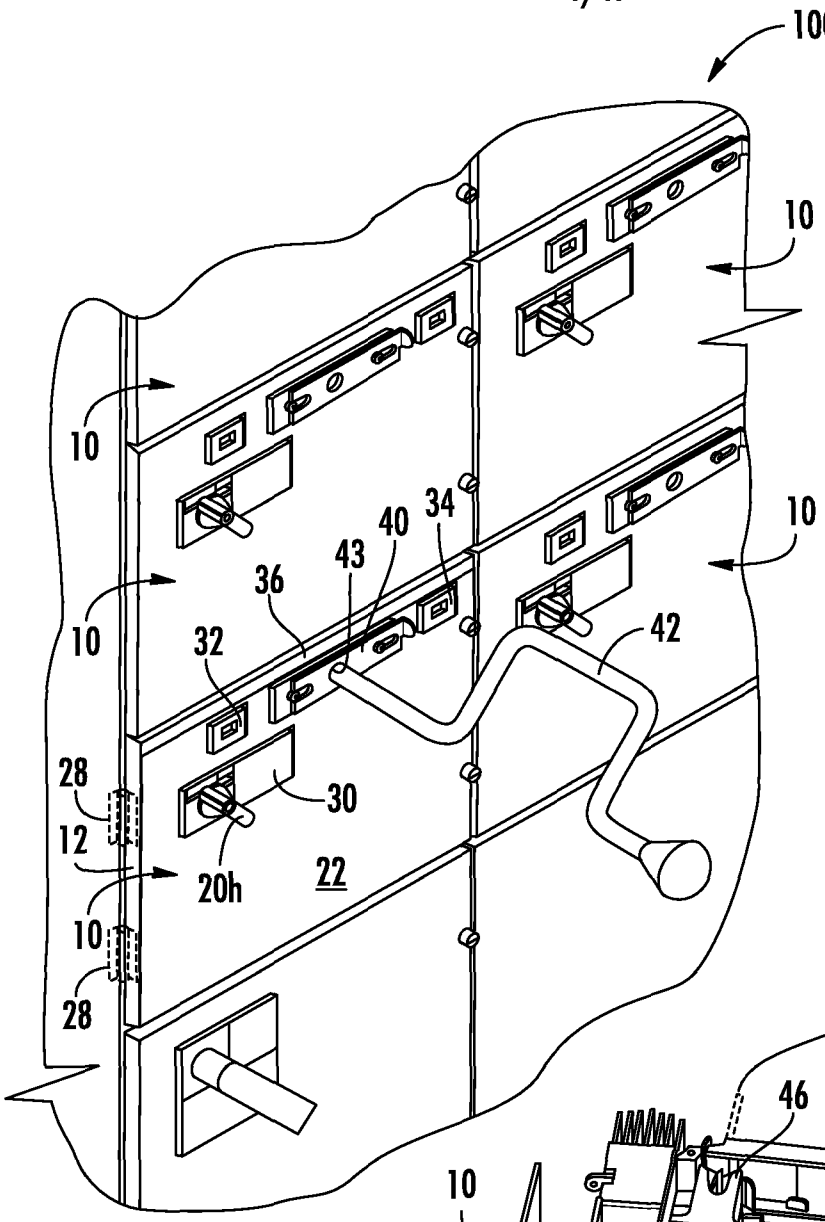

FIG. 1
PRIOR ART

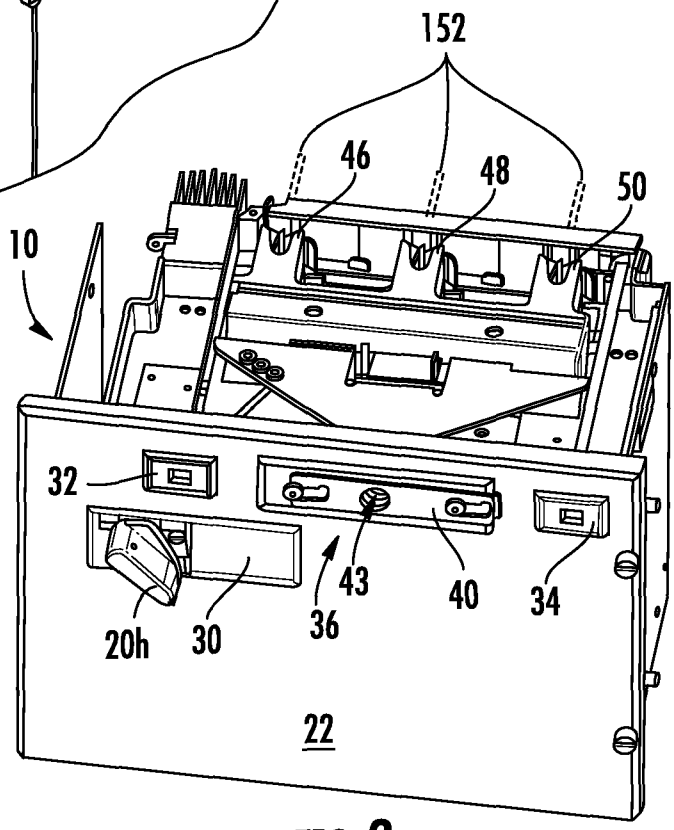

FIG. 2
PRIOR ART

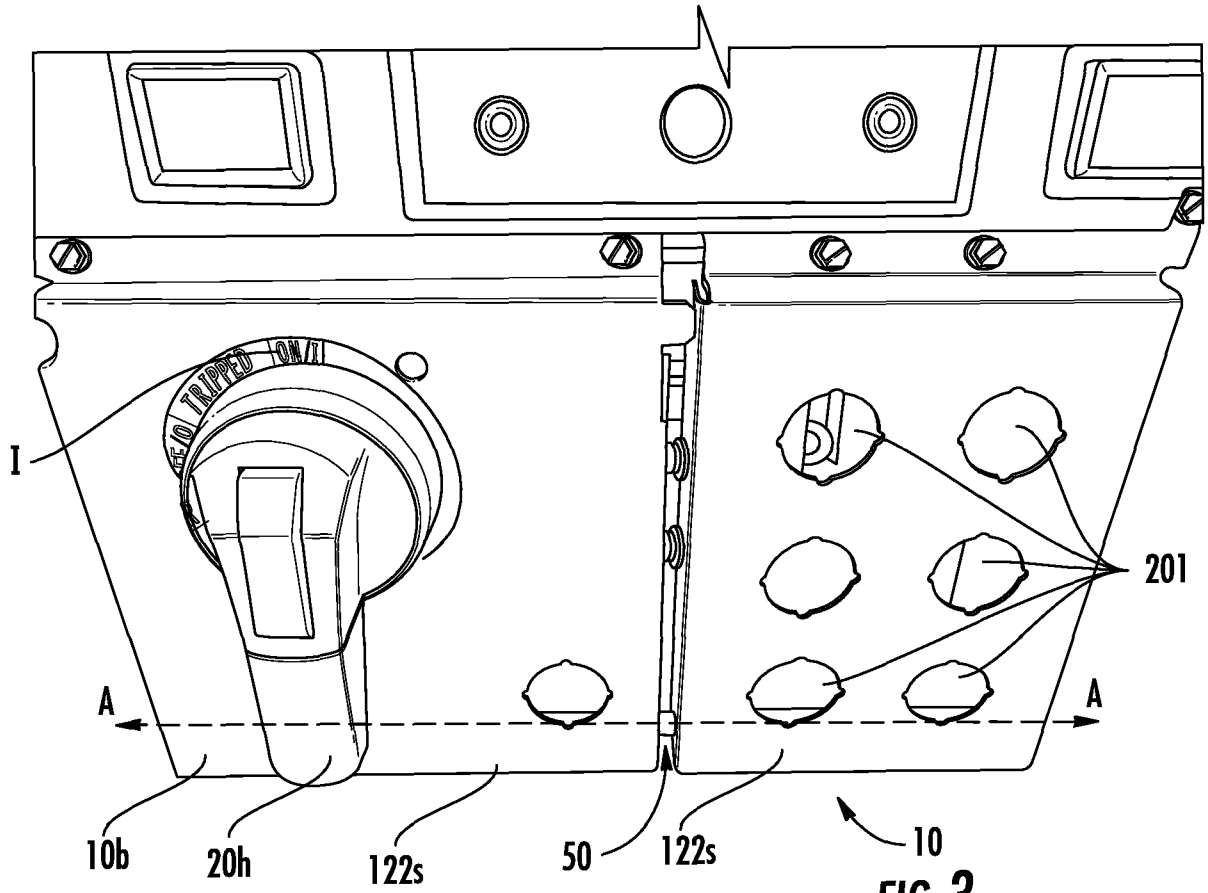
I
OFF
TRIPPED
ON
201
A
A
10b
20h
122s
50
122s
10

FIG. 3

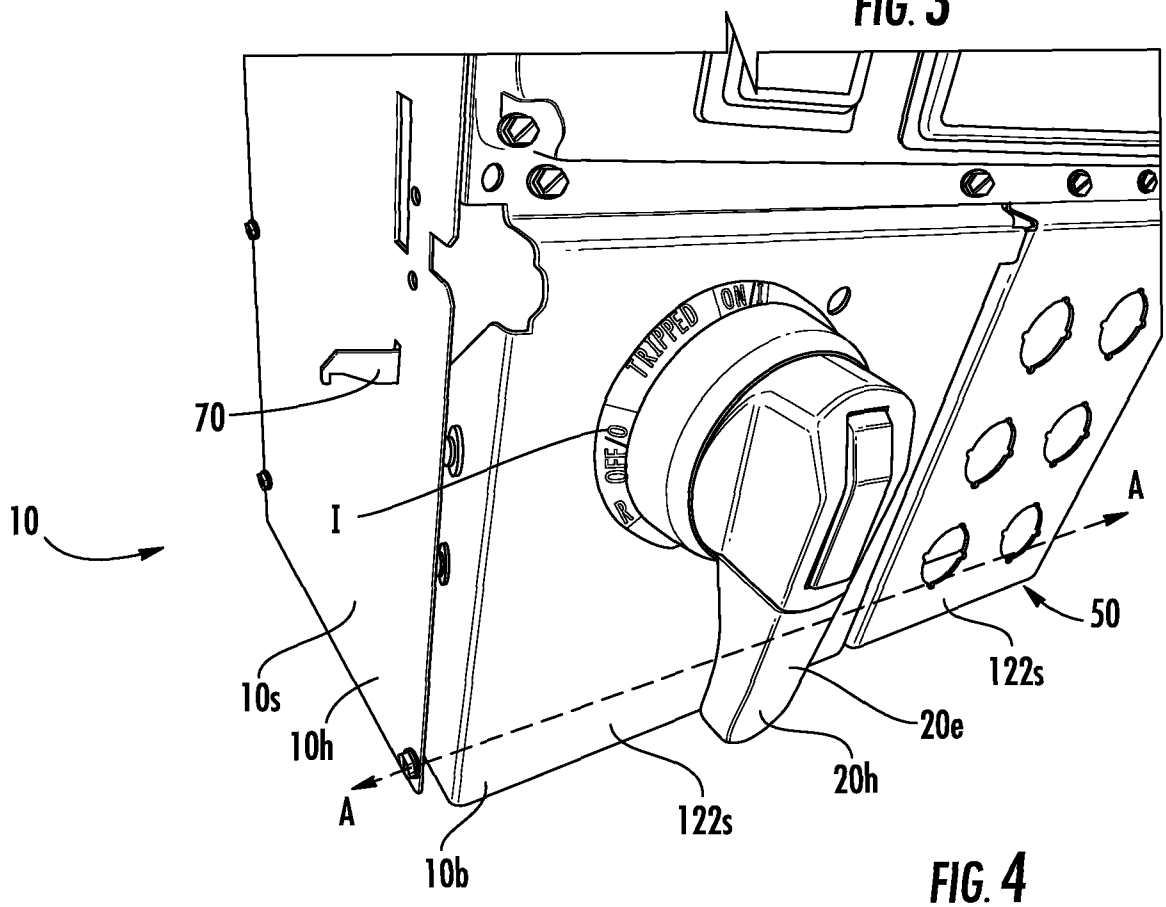
70
10
I
OFF
TRIPPED
ON
A
50
122s
10s
10h
20e
20h
A
122s
10b

FIG. 4

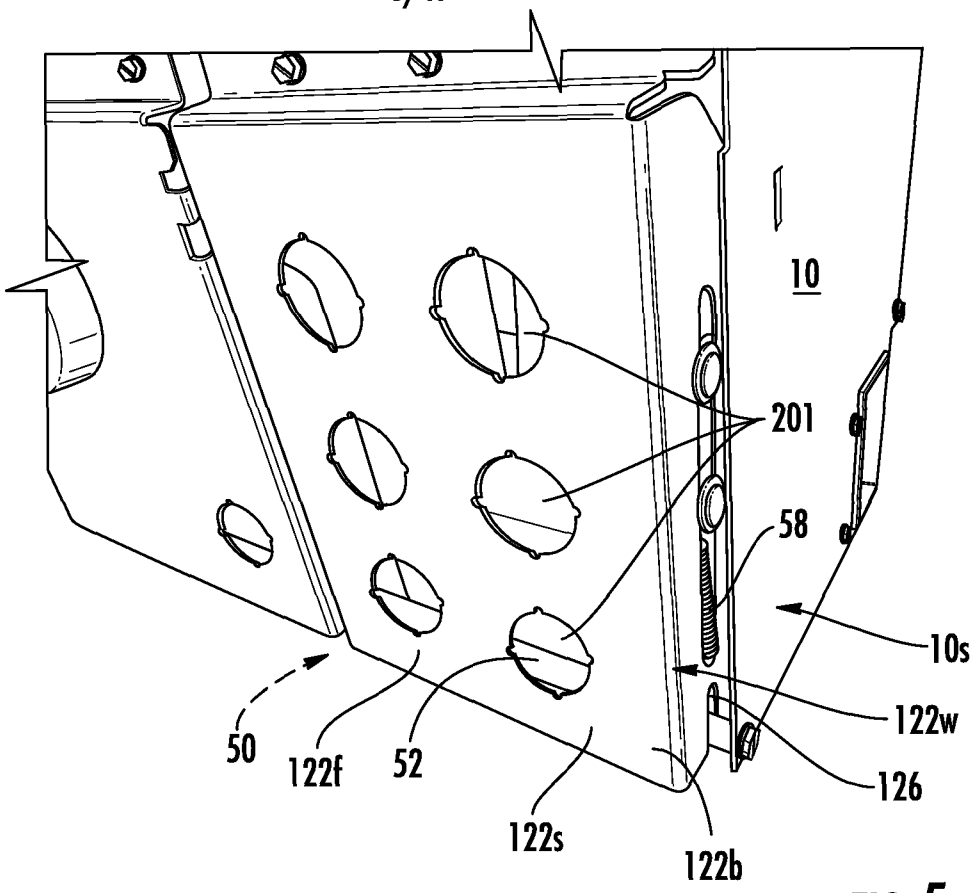
10
201
58
10s
122w
126
50
122f
52
122s
122b

FIG. 5

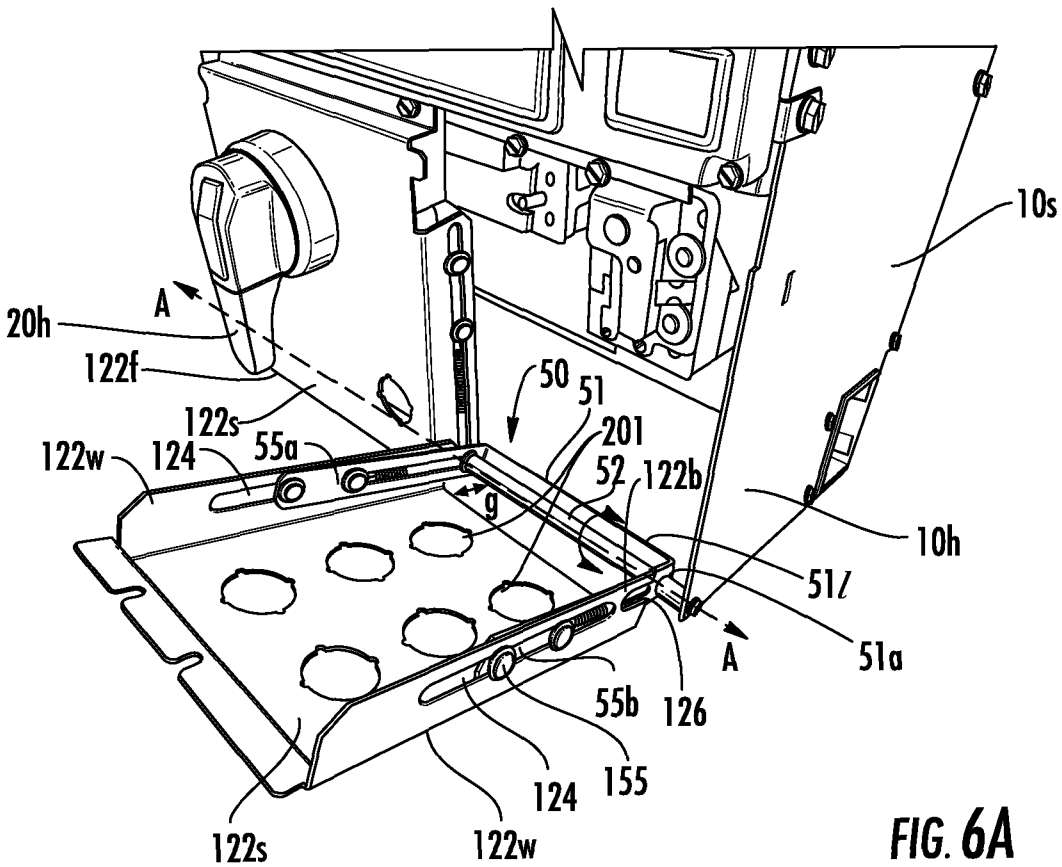
10s
A
20h
122f
50
51
122s
201
122w
124
55a
52
122b
g
10h
51l
A
51a
55b
126
124
155
122s
122w

FIG. 6A

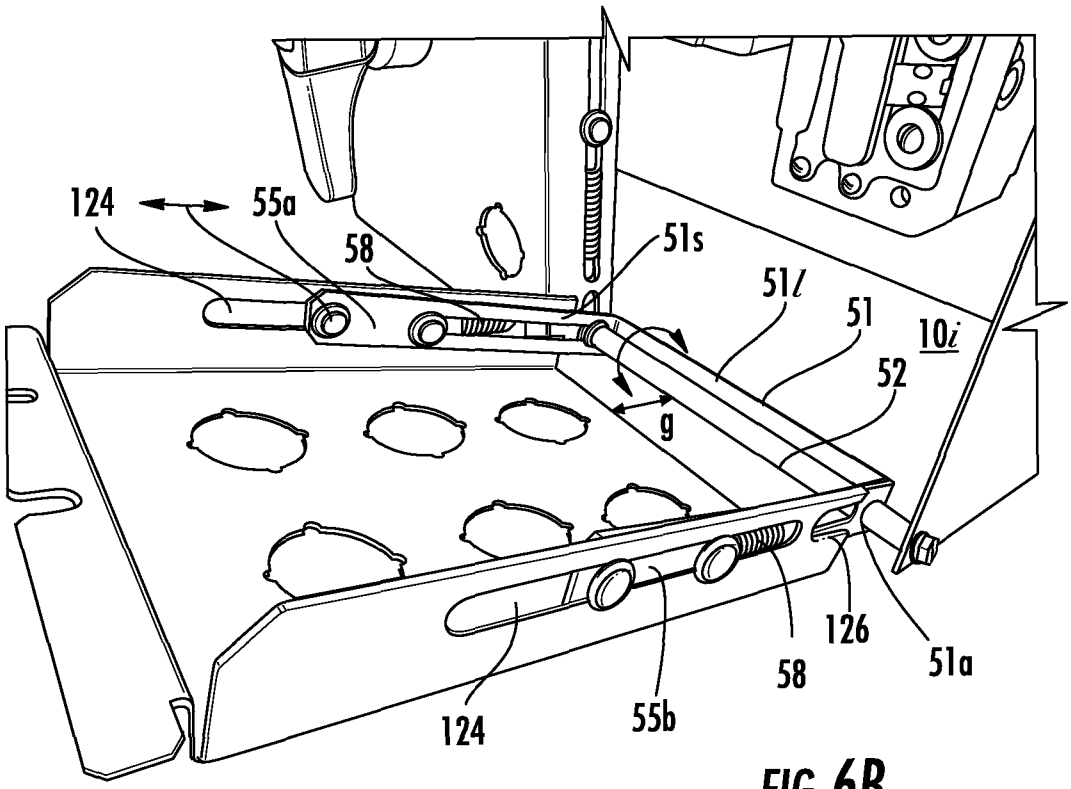
124
55a
58
51s
51l
51
10i
52
g
126
58
51a
124
55b

FIG. 6B

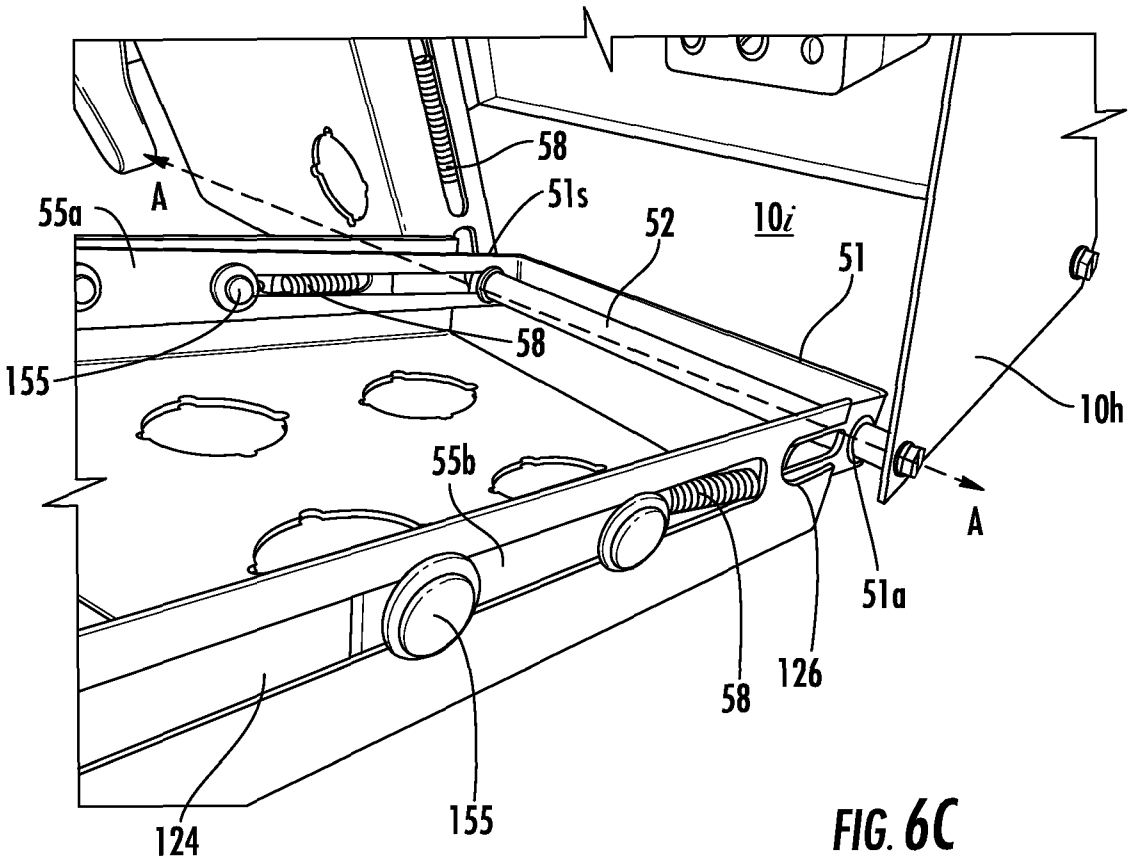
A
55a
58
51s
52
10i
51
155
58
10h
55b
A
51a
126
58
124
155

FIG. 6C

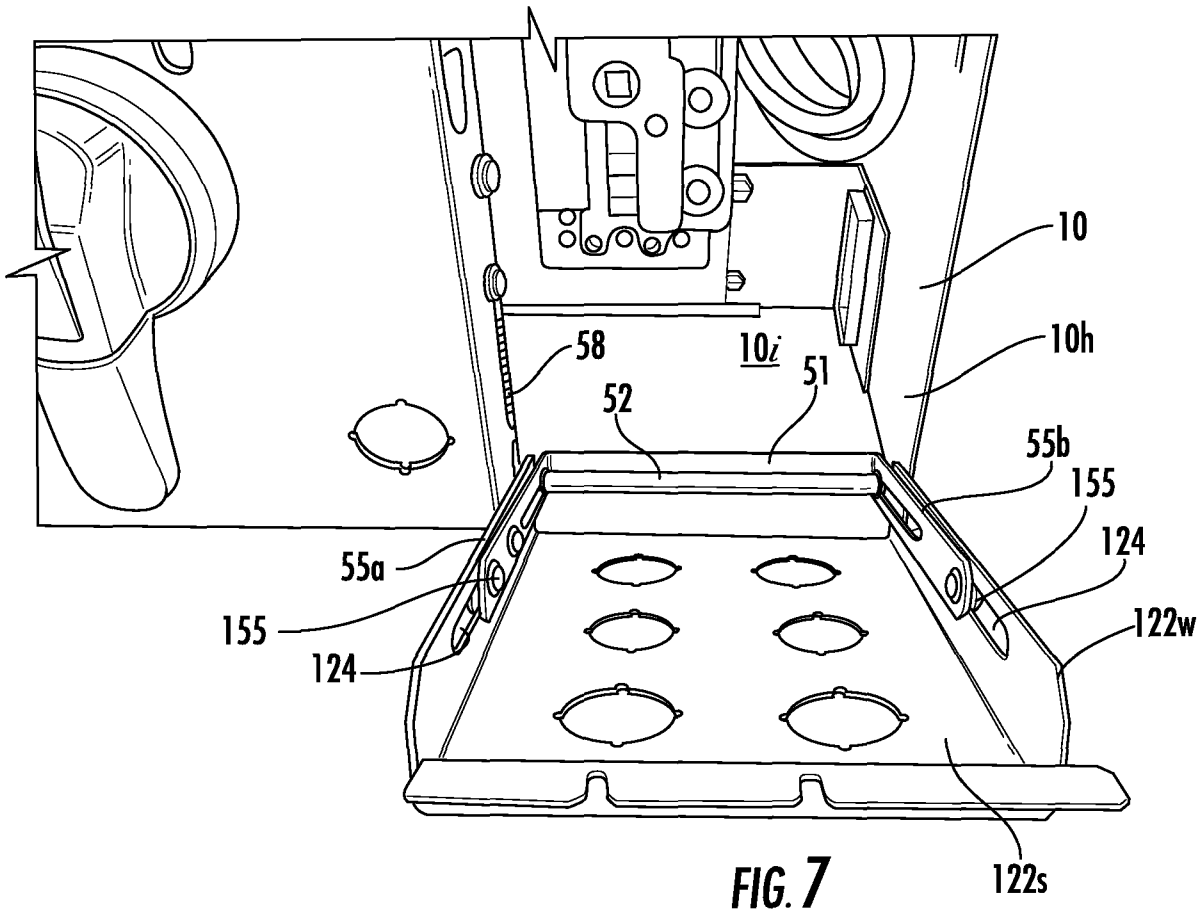
10
10h
10i
58
51
52
55b
155
124
122w
55a
155
124
122s

FIG. 7

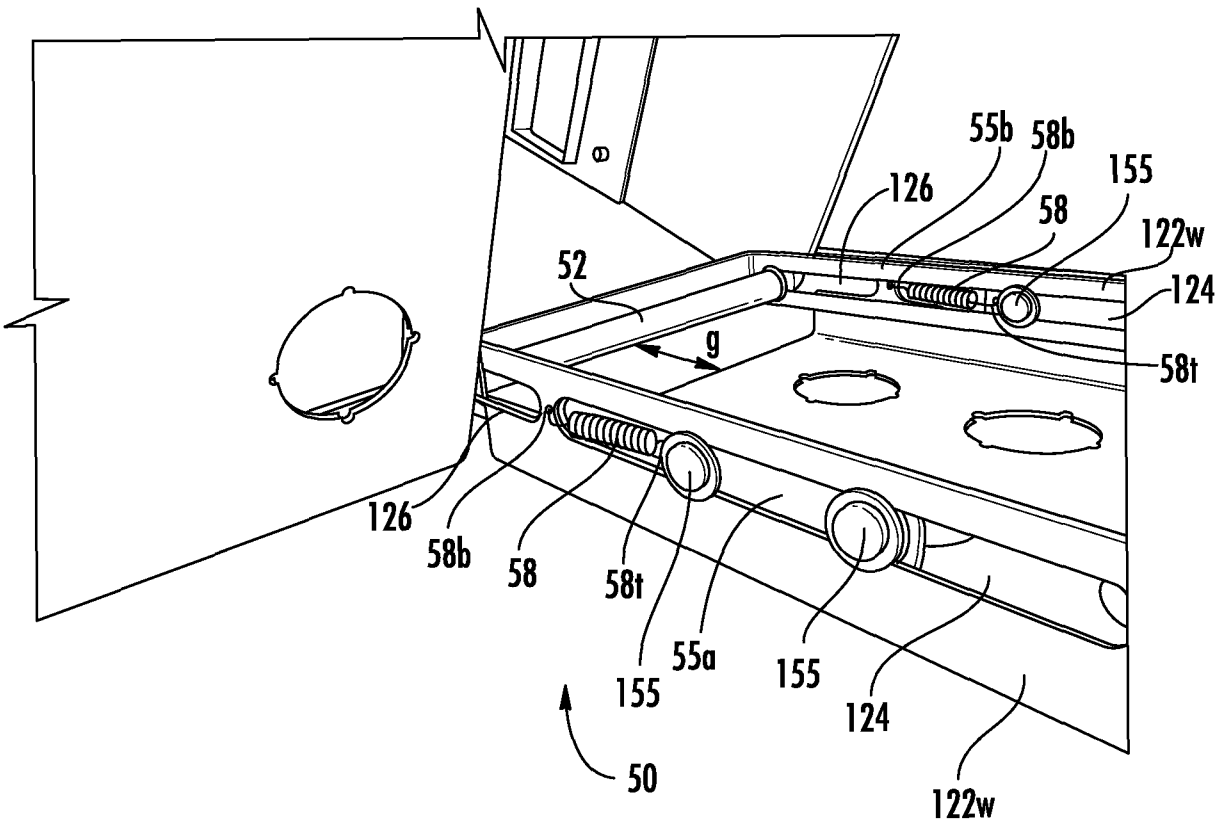
55b
58b
155
126
58
122w
52
124
g
58t
126
58b
58
58t
55a
155
155
124
50
122w

FIG. 8

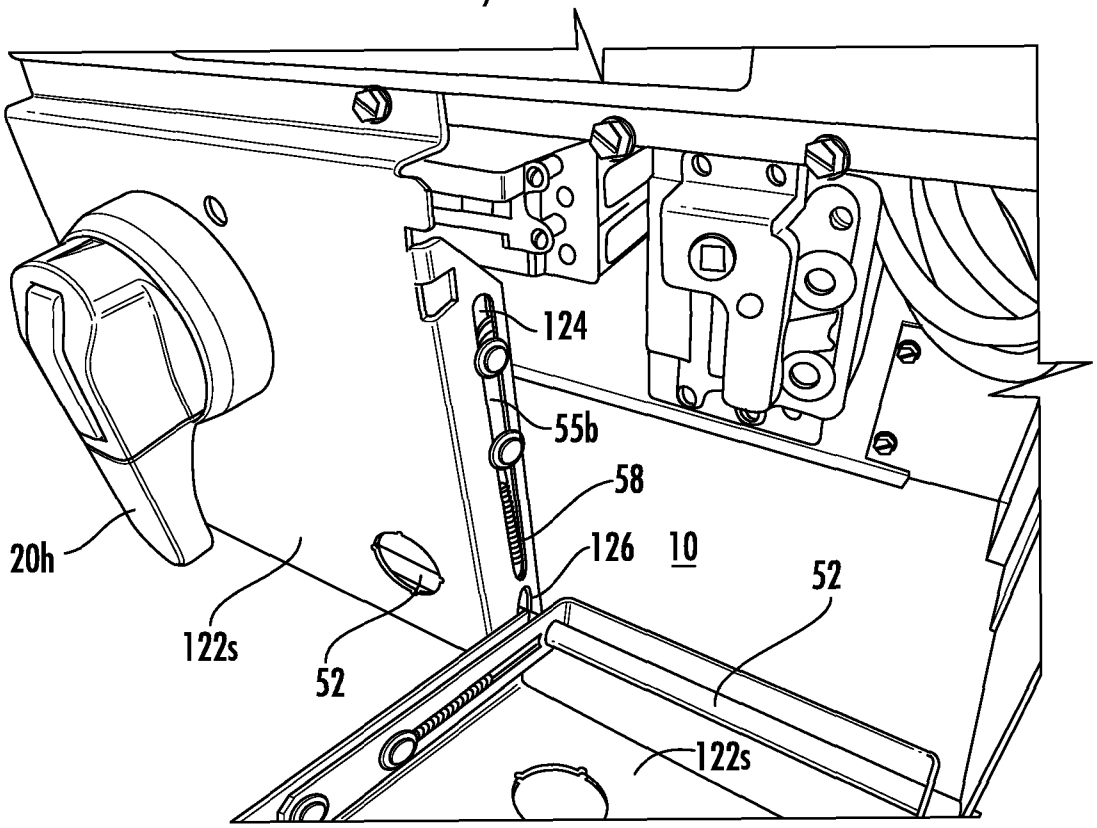
124
55b
58
20h
126
10
52
122s
52
122s

FIG. 9

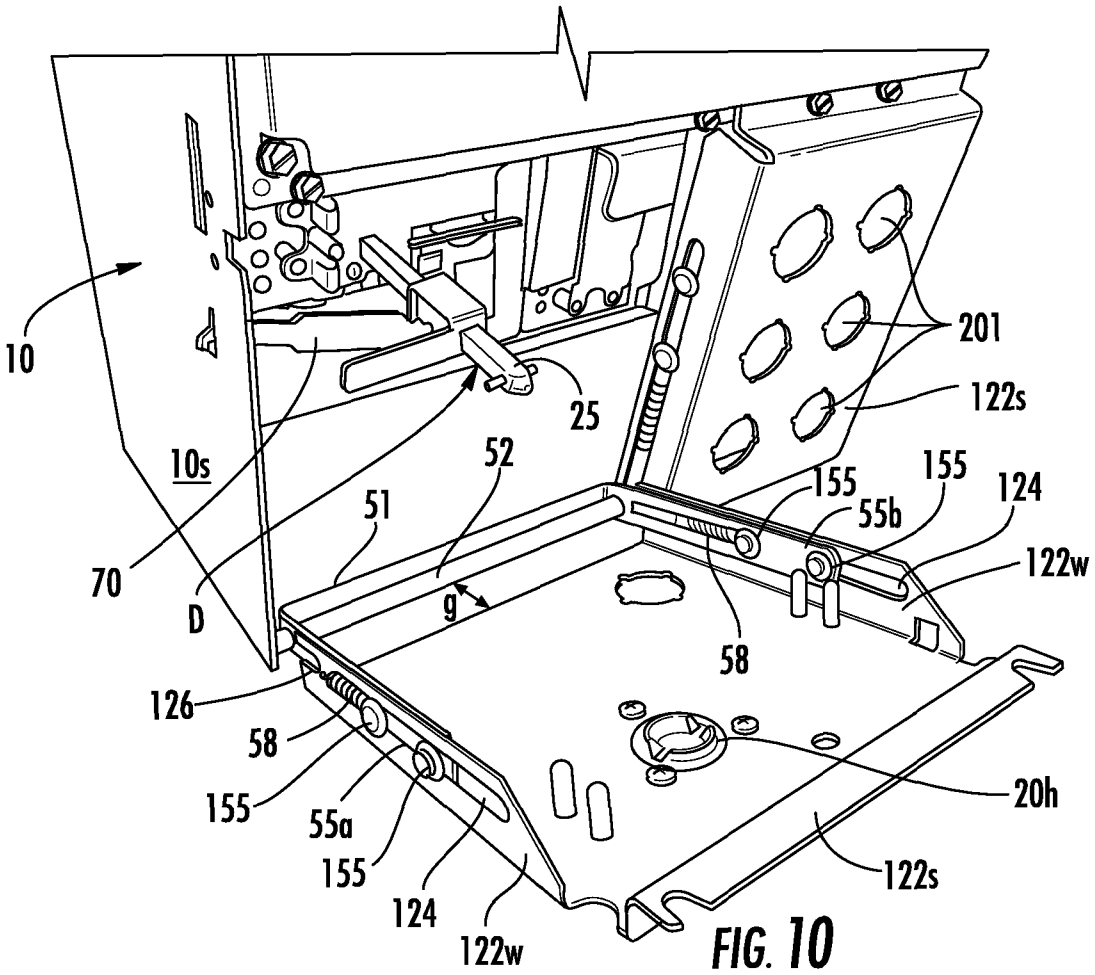
10
201
122s
25
10s
52
155
155
124
51
55b
70
122w
D
g
58
126
58
20h
155
55a
155
122s
124
122w

FIG. 10

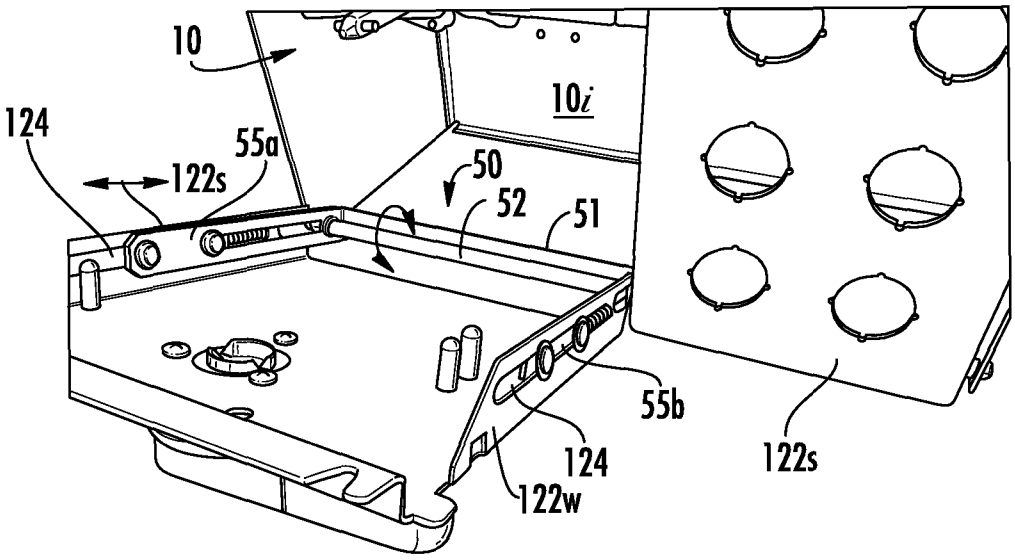

FIG. 11A

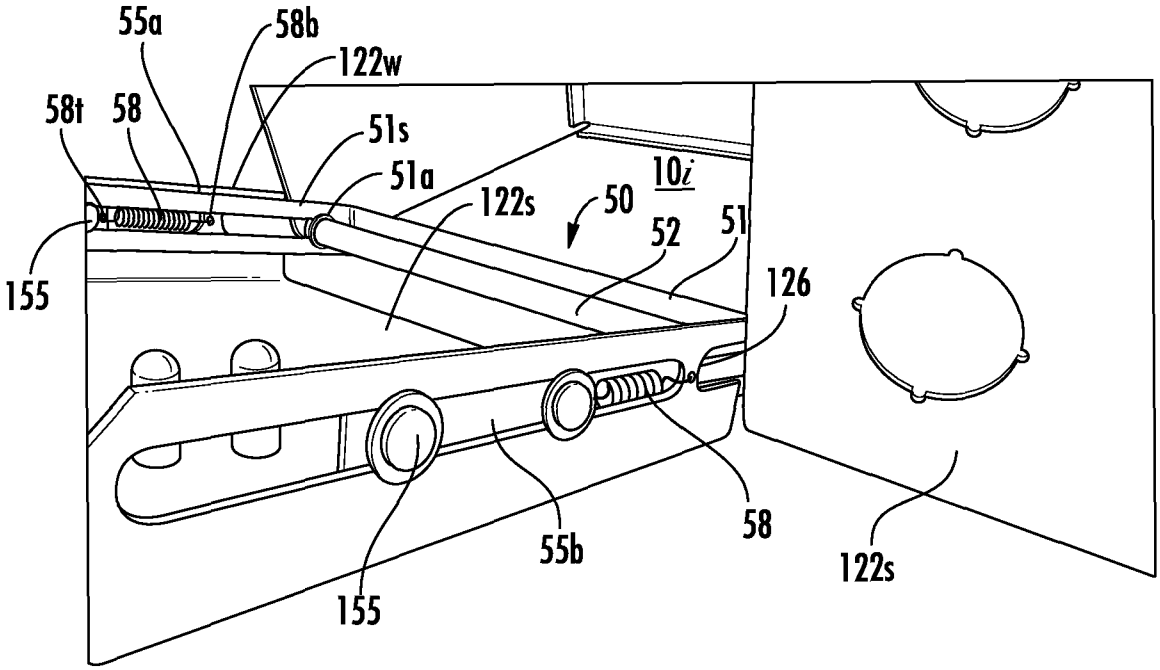

FIG. 11B

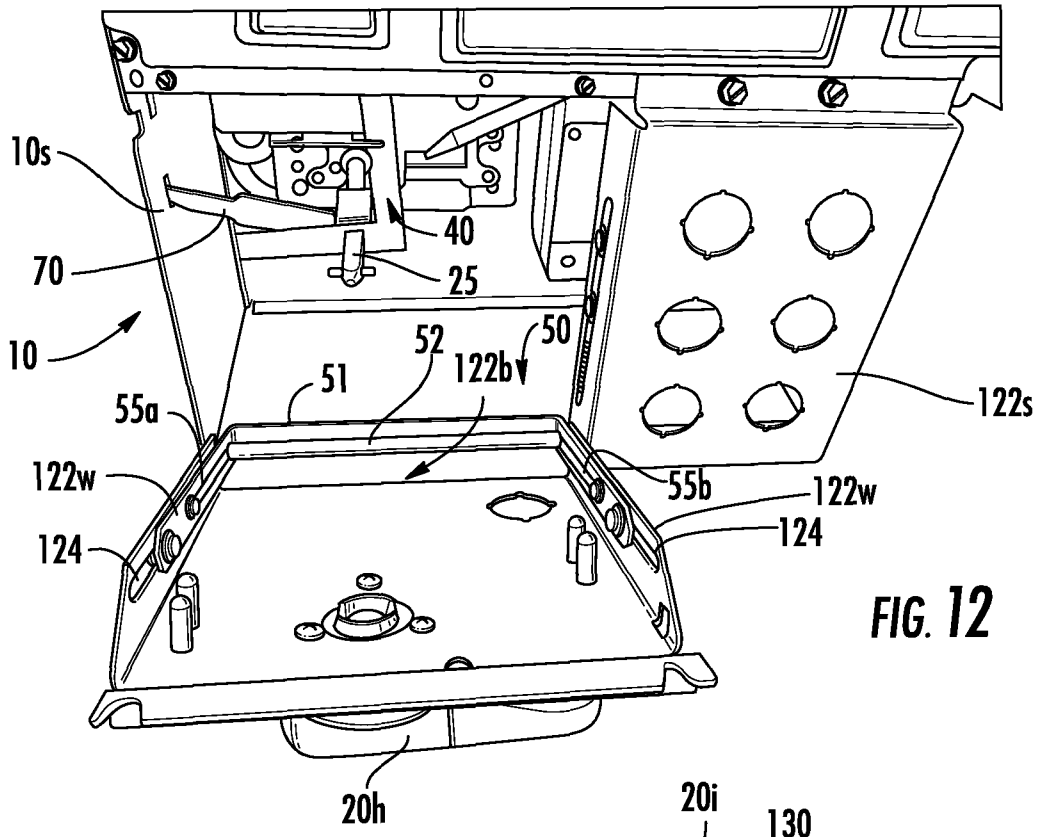
10s
70
10
40
25
52
50
51
122b
55a
122w
124
122s
55b
122w
124
20h

FIG. 12

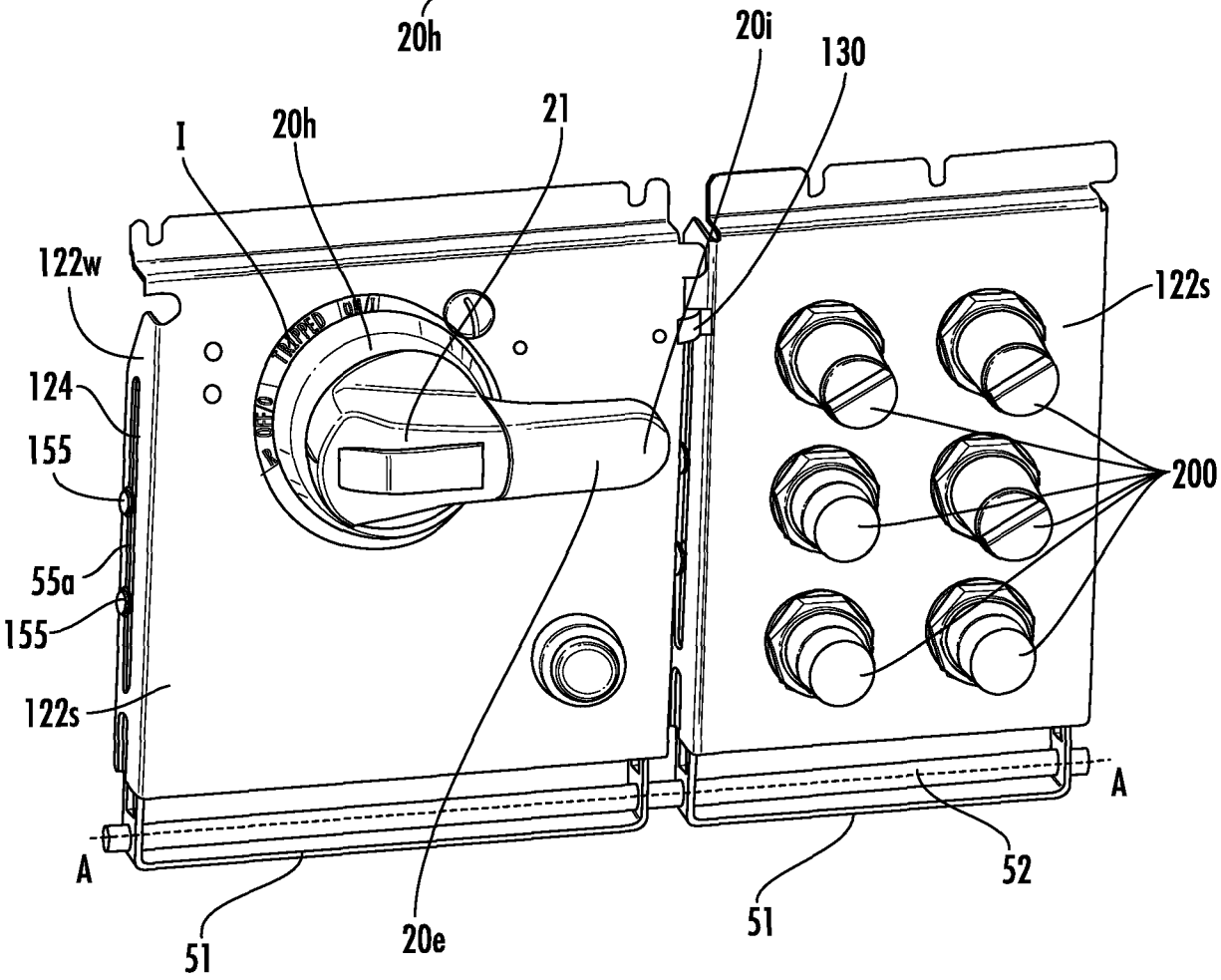
20i
130
I
20h
21
122w
124
155
55a
155
122s
122s
200
A
A
51
20e
51
52

FIG. 13

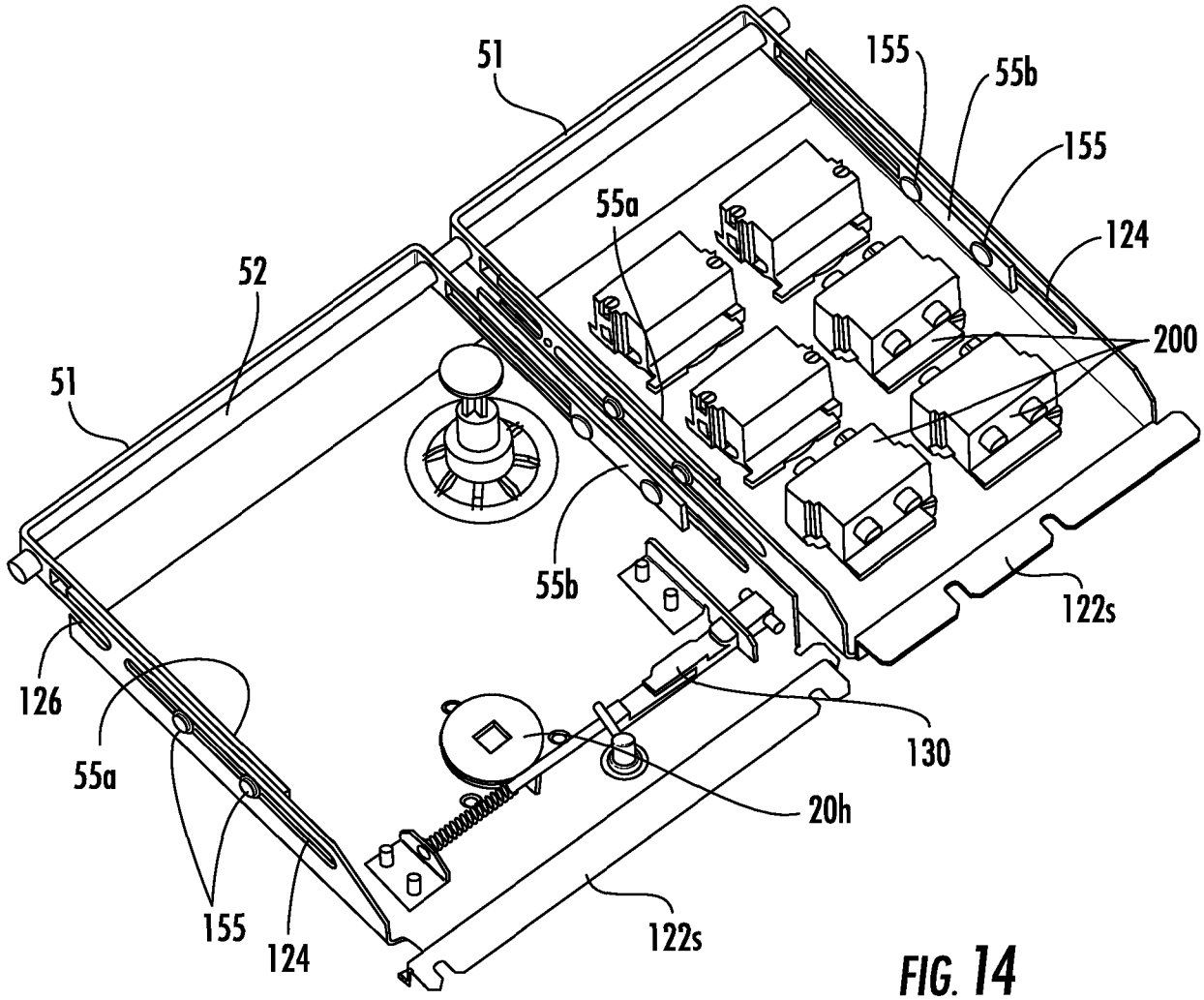
51
155
55b
155
55a
124
52
200
51
55b
122s
126
55a
130
20h
155
124
122s

FIG. 14

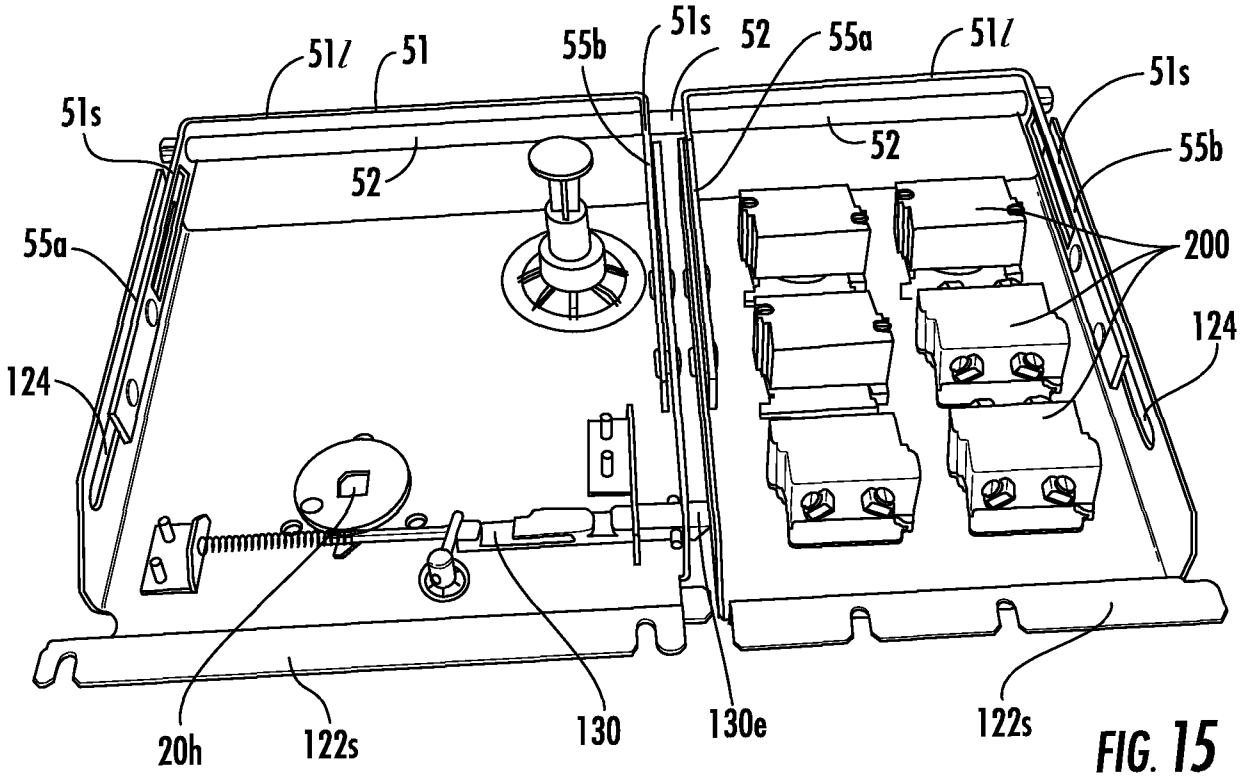
51ℓ
51
55b
51s
52
55a
51ℓ
51s
51s
52
52
55b
55a
200
124
124
20h
122s
130
130e
122s

FIG. 15

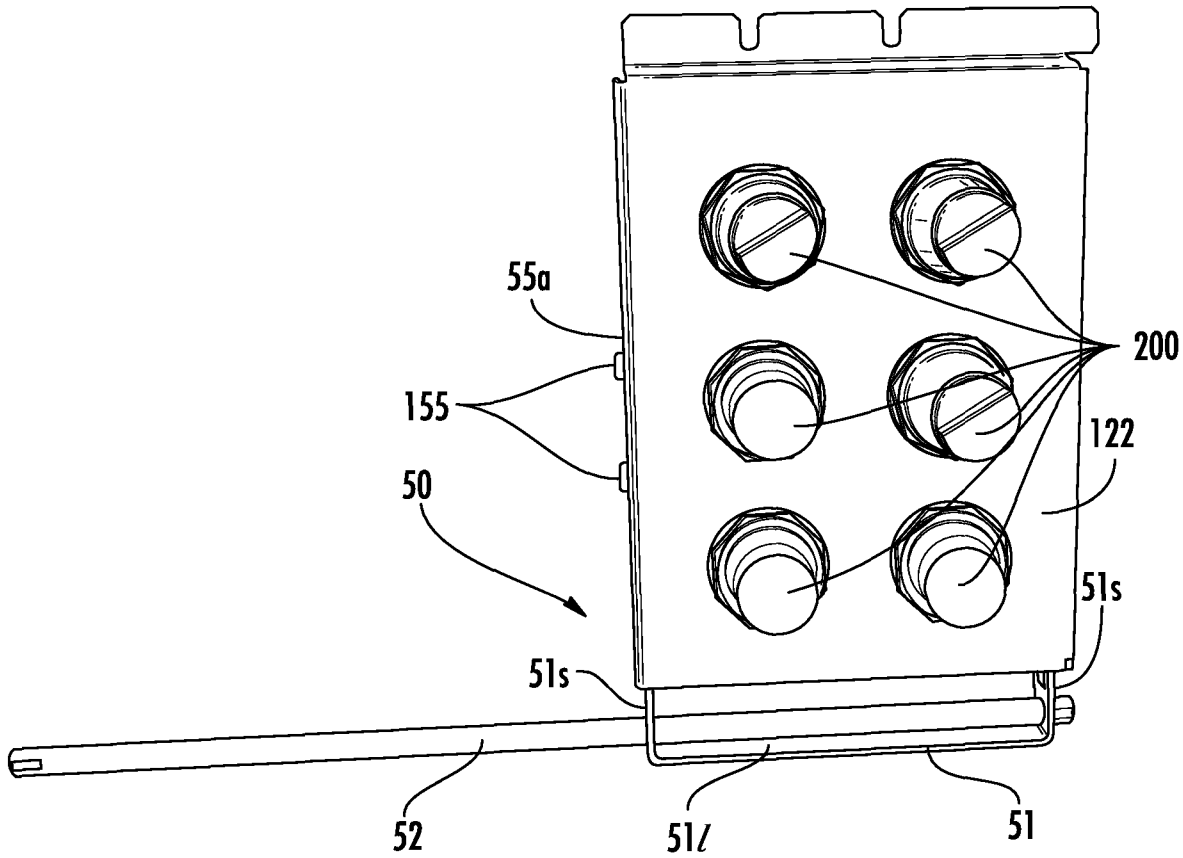

FIG. 16A

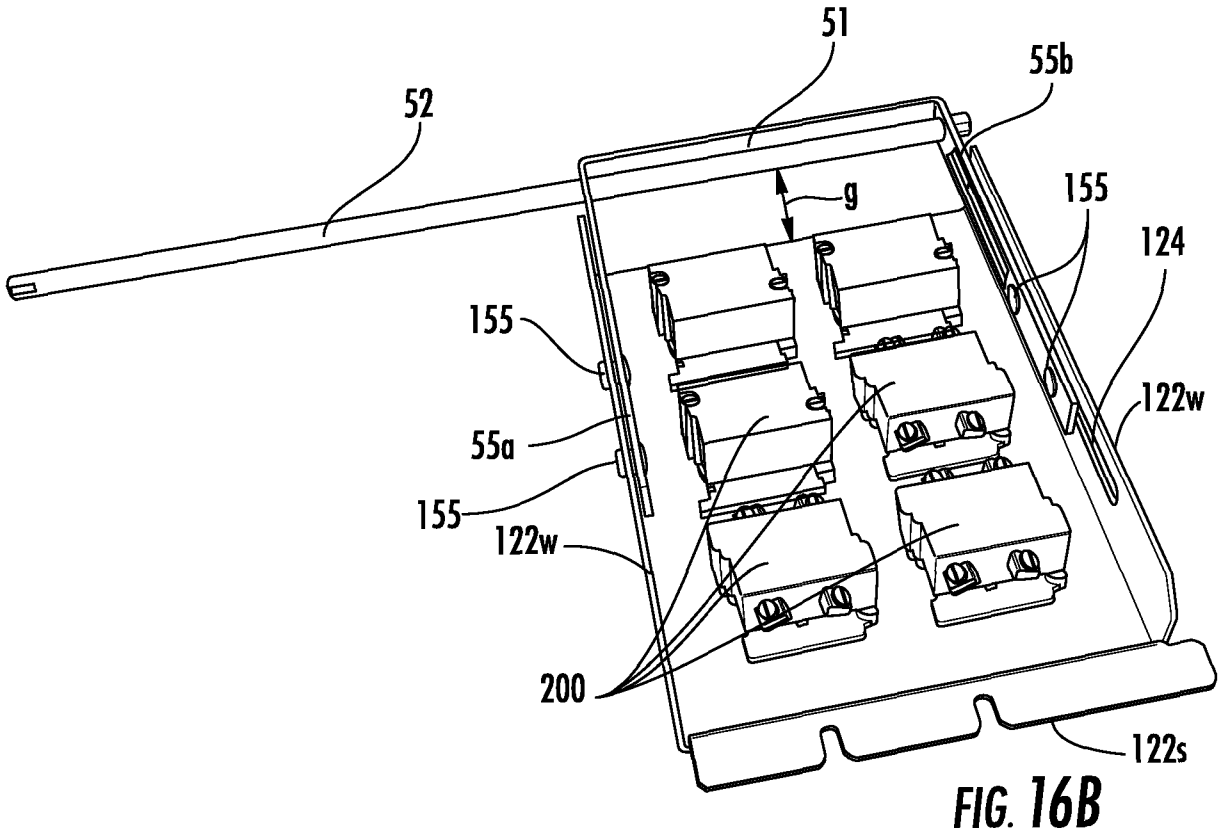

FIG. 16B

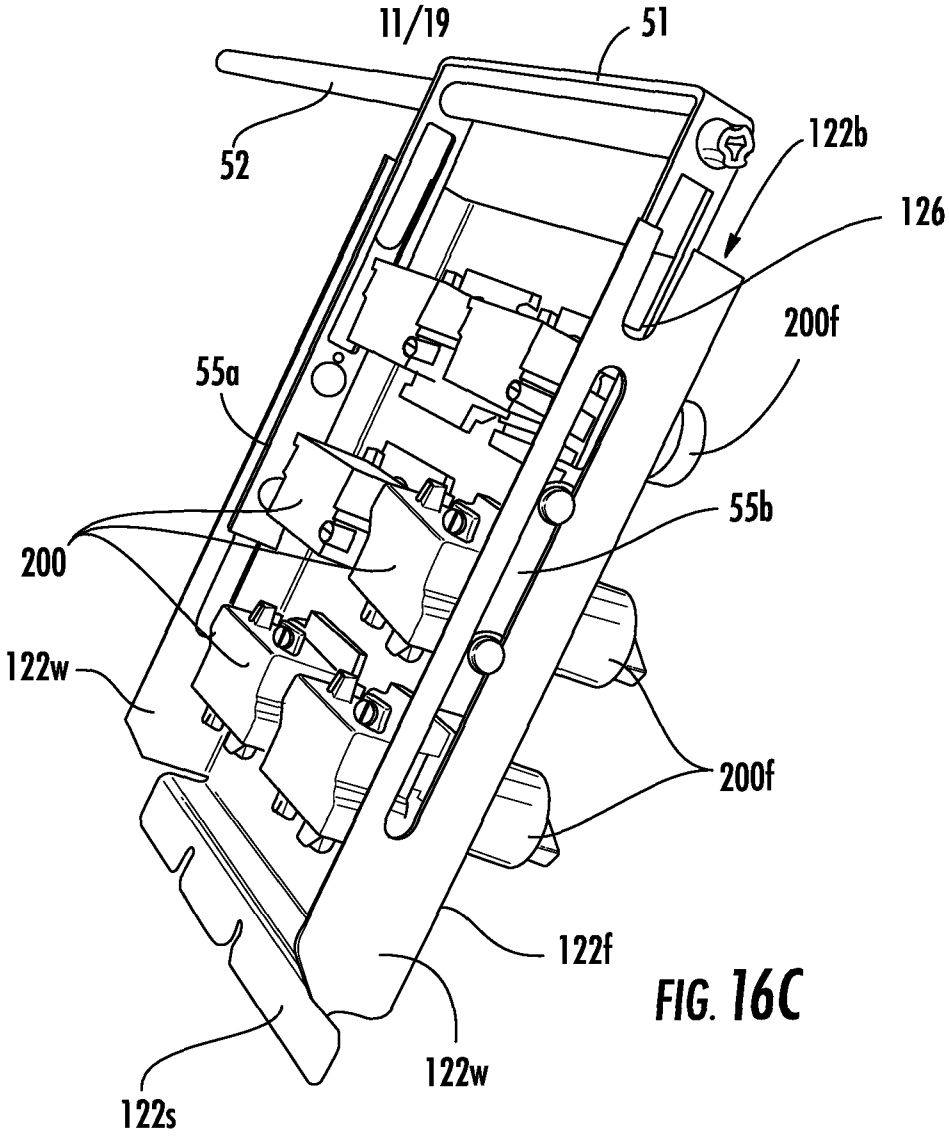

FIG. 16C

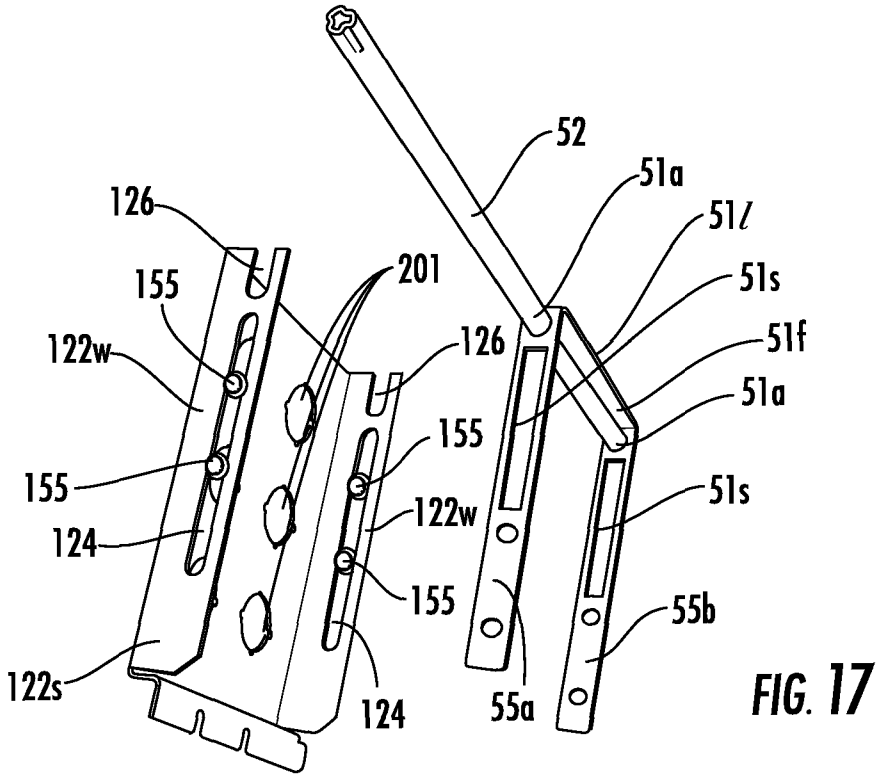

FIG. 17

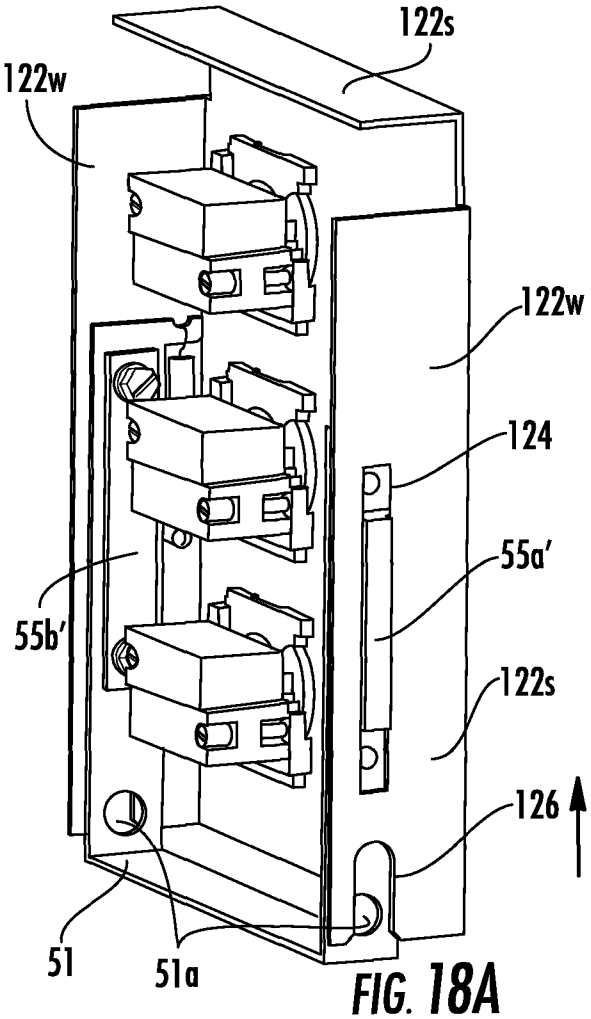

FIG. 18A

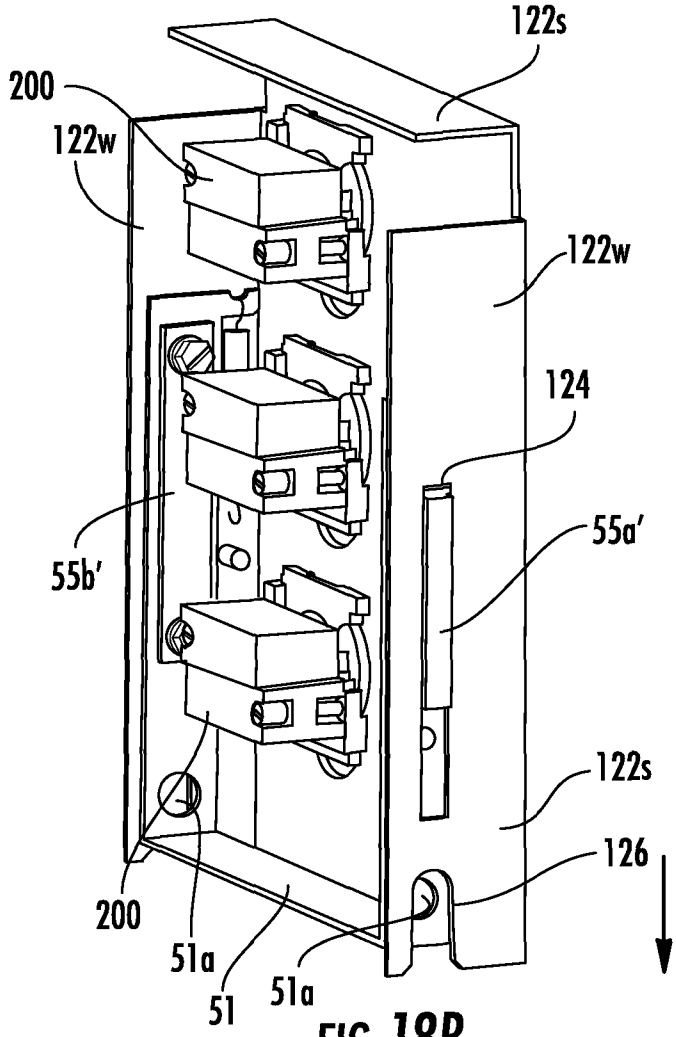

FIG. 18B

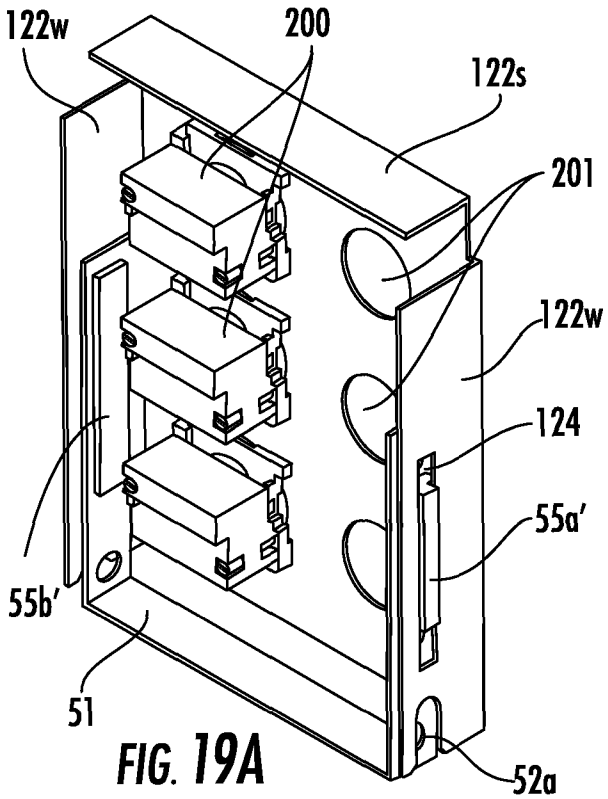

FIG. 19A

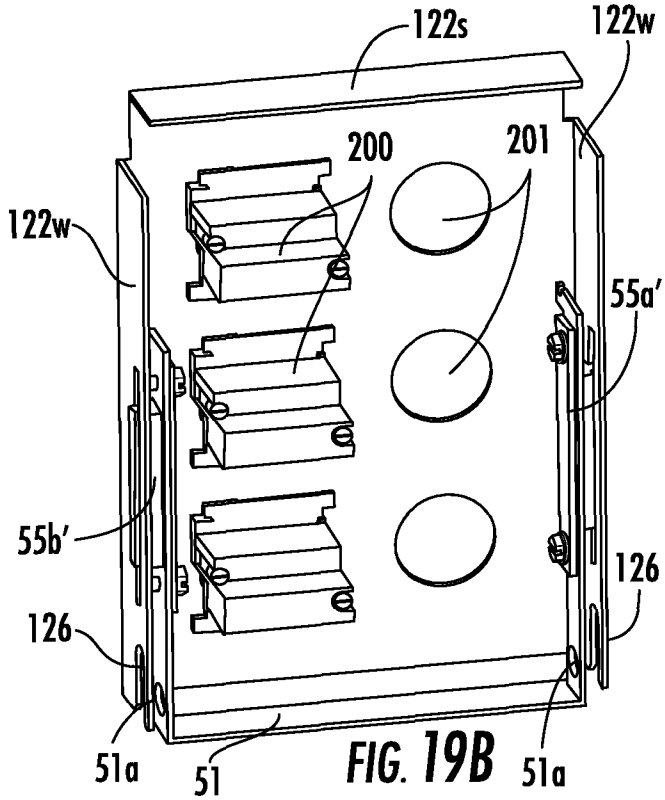

FIG. 19B

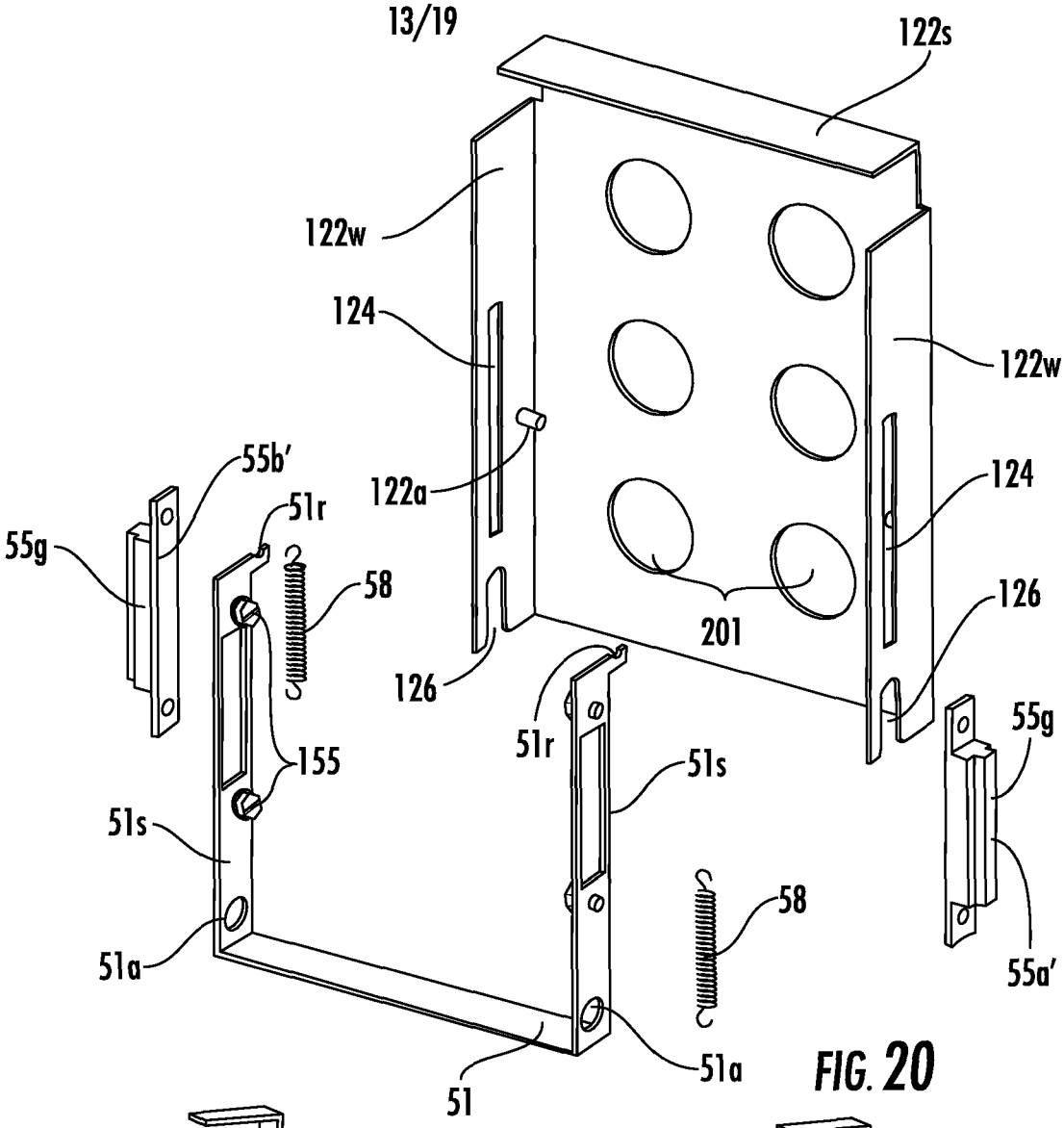

FIG. 20

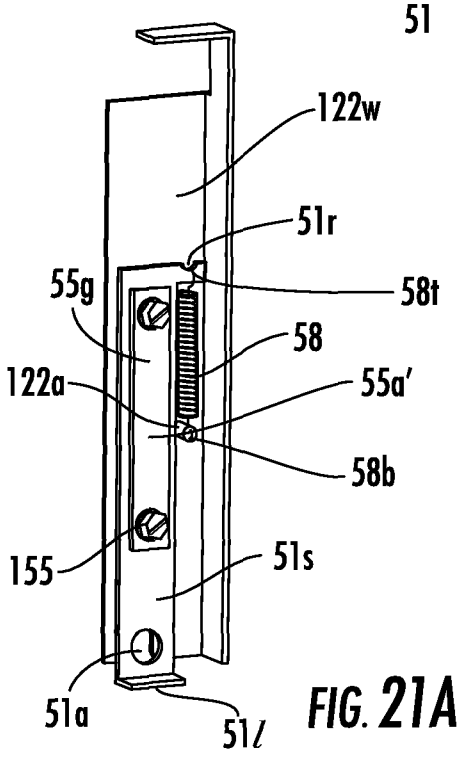

FIG. 21A

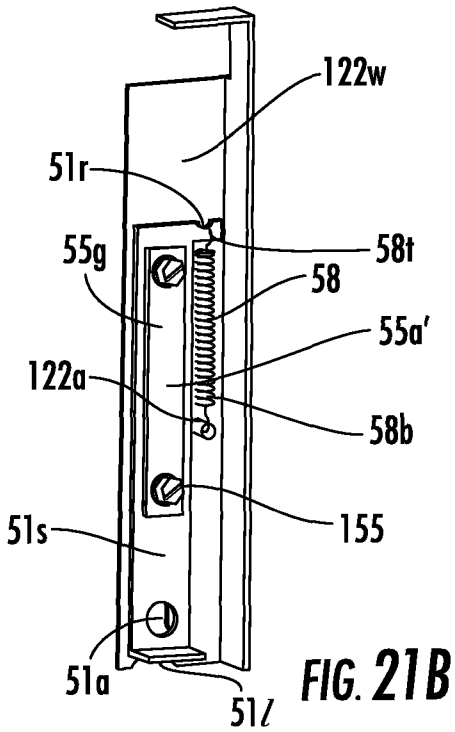

FIG. 21B

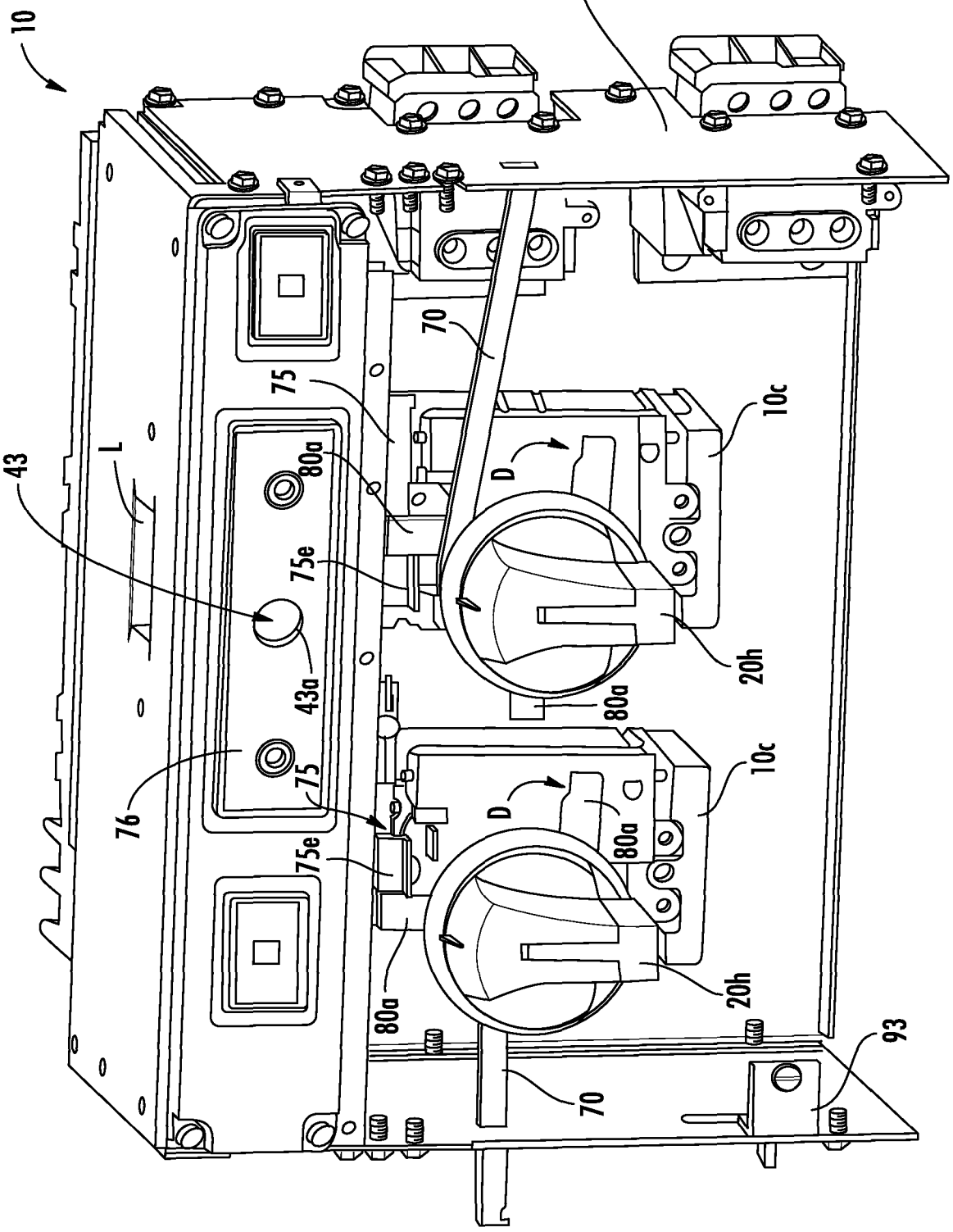

FIG. 22

FIG. 23

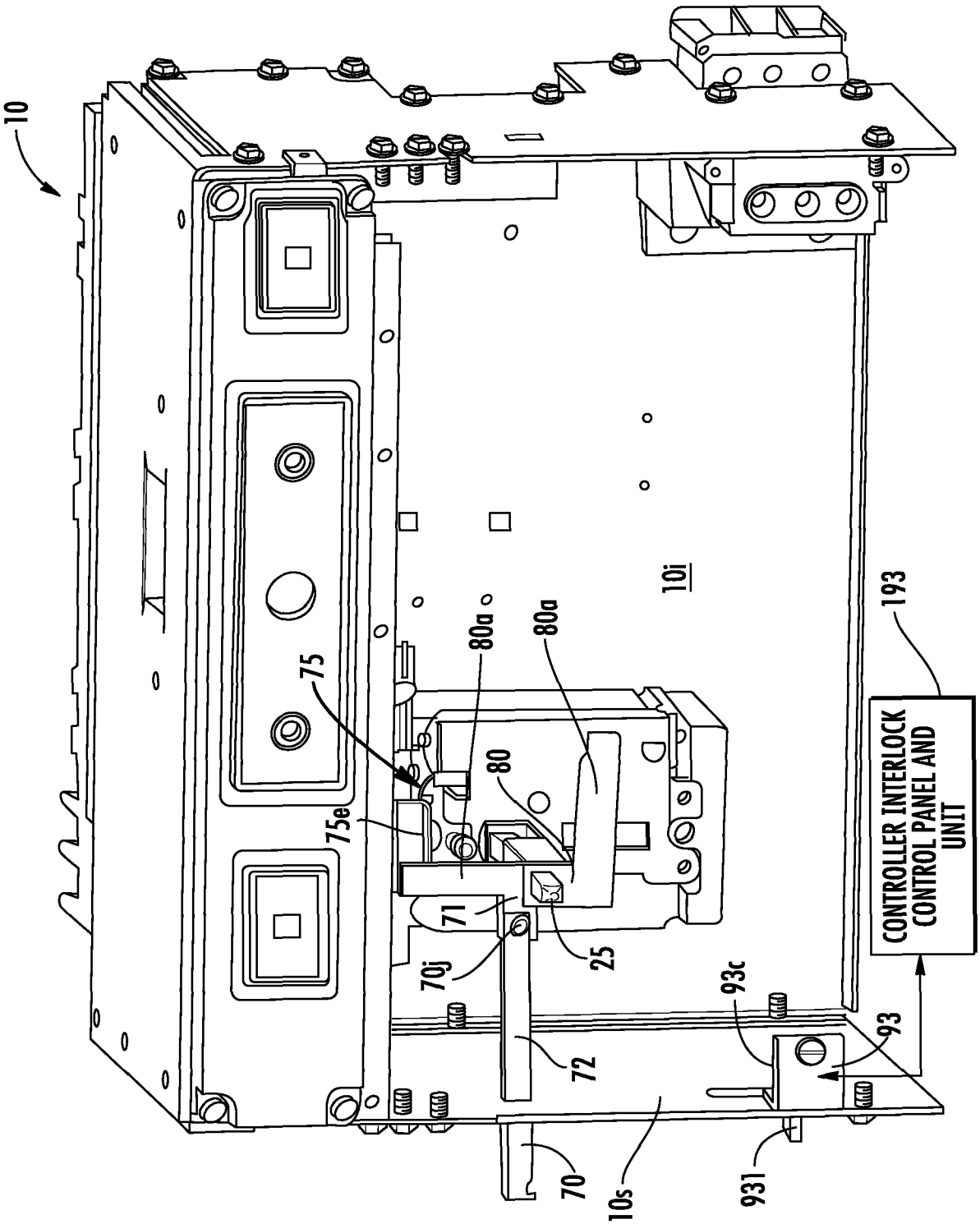
10
10i
75
75e
80a
80a
80
71
70j
25
72
70
10s
931
93c
93
193
CONTROLLER INTERLOCK CONTROL PANEL AND UNIT

FIG. 24

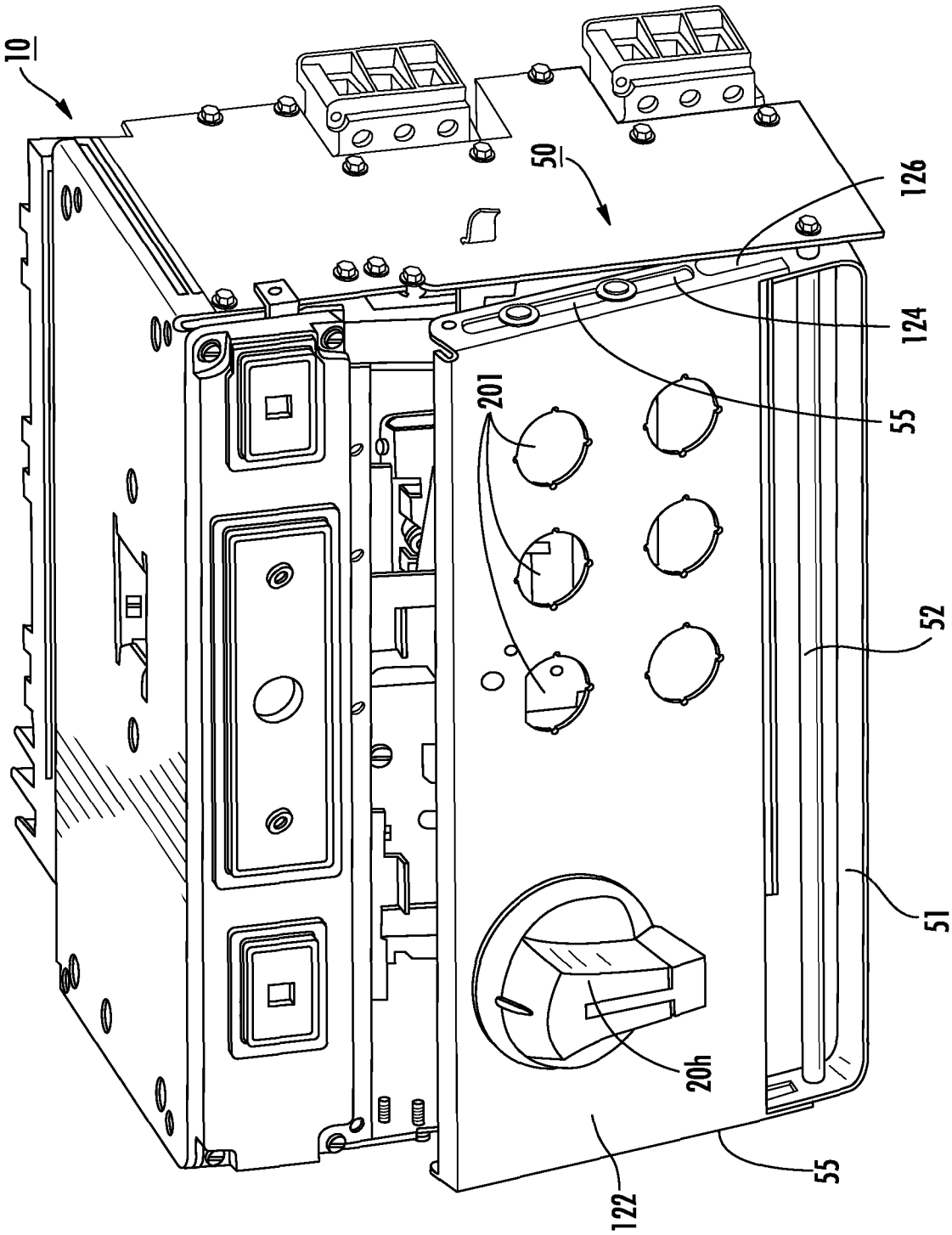

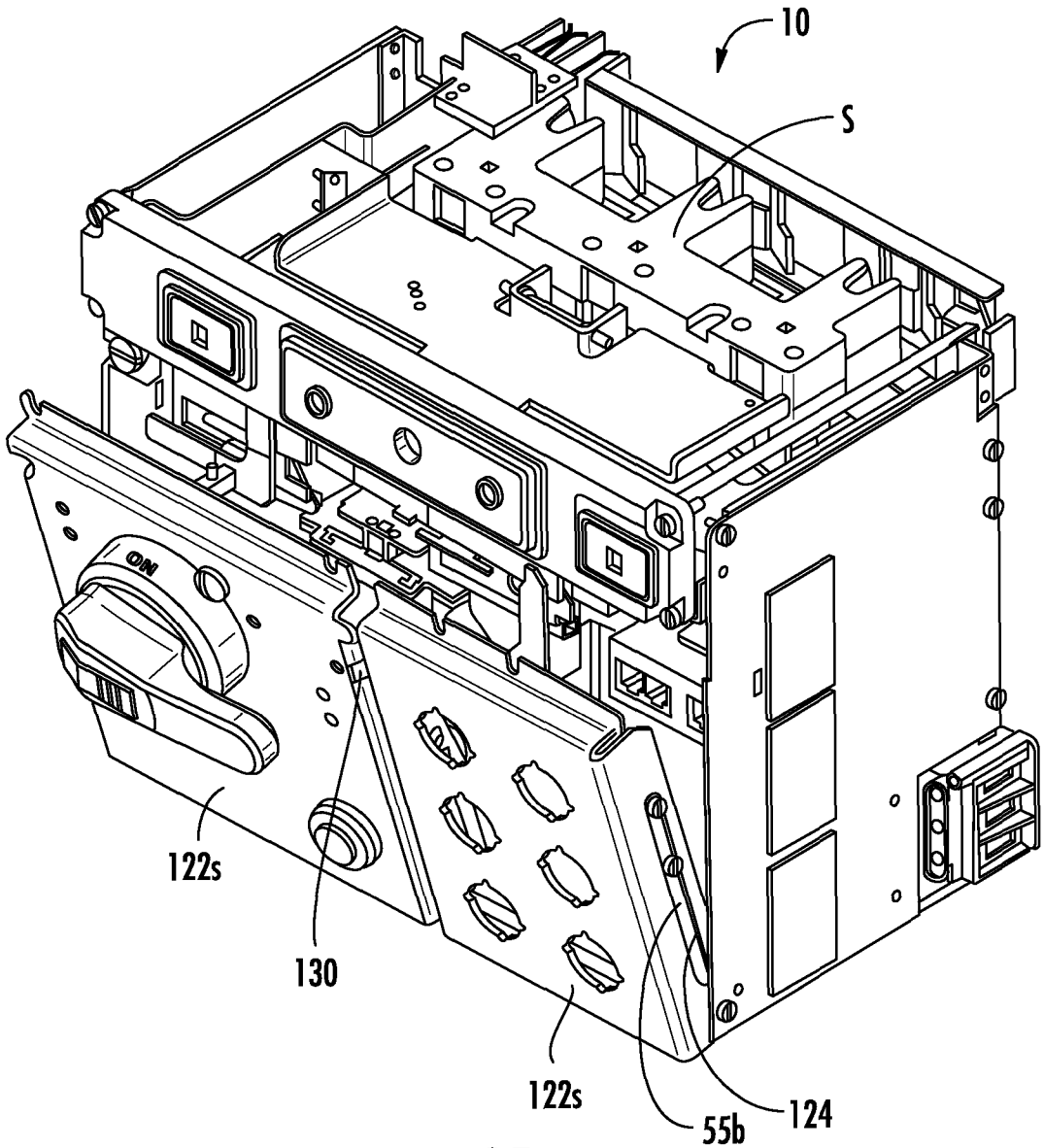

FIG. 25

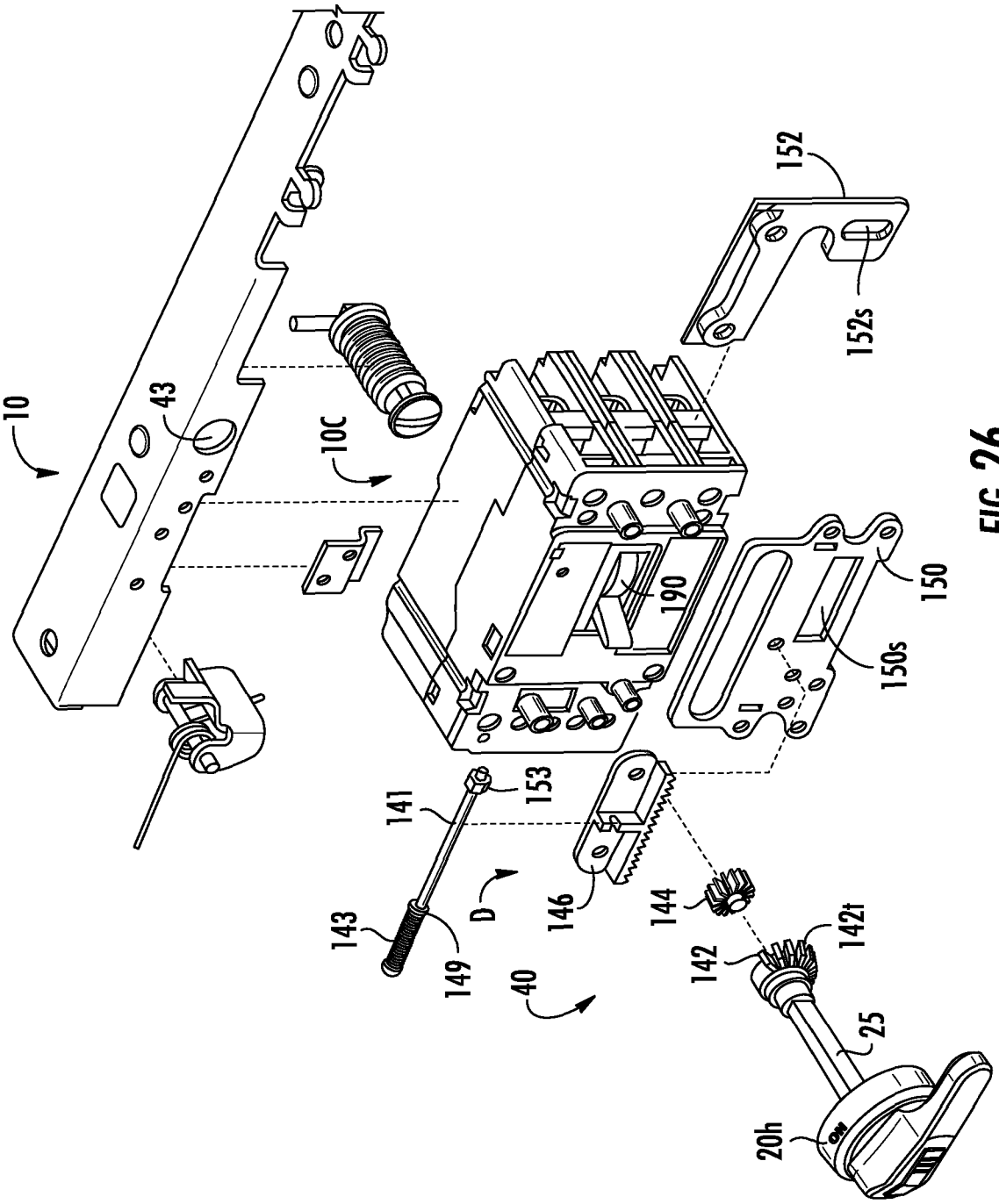
10
43
10C
152
152s
150
150s
190
141
153
143
149
D
146
144
142
142t
40
25
20h

FIG. 26

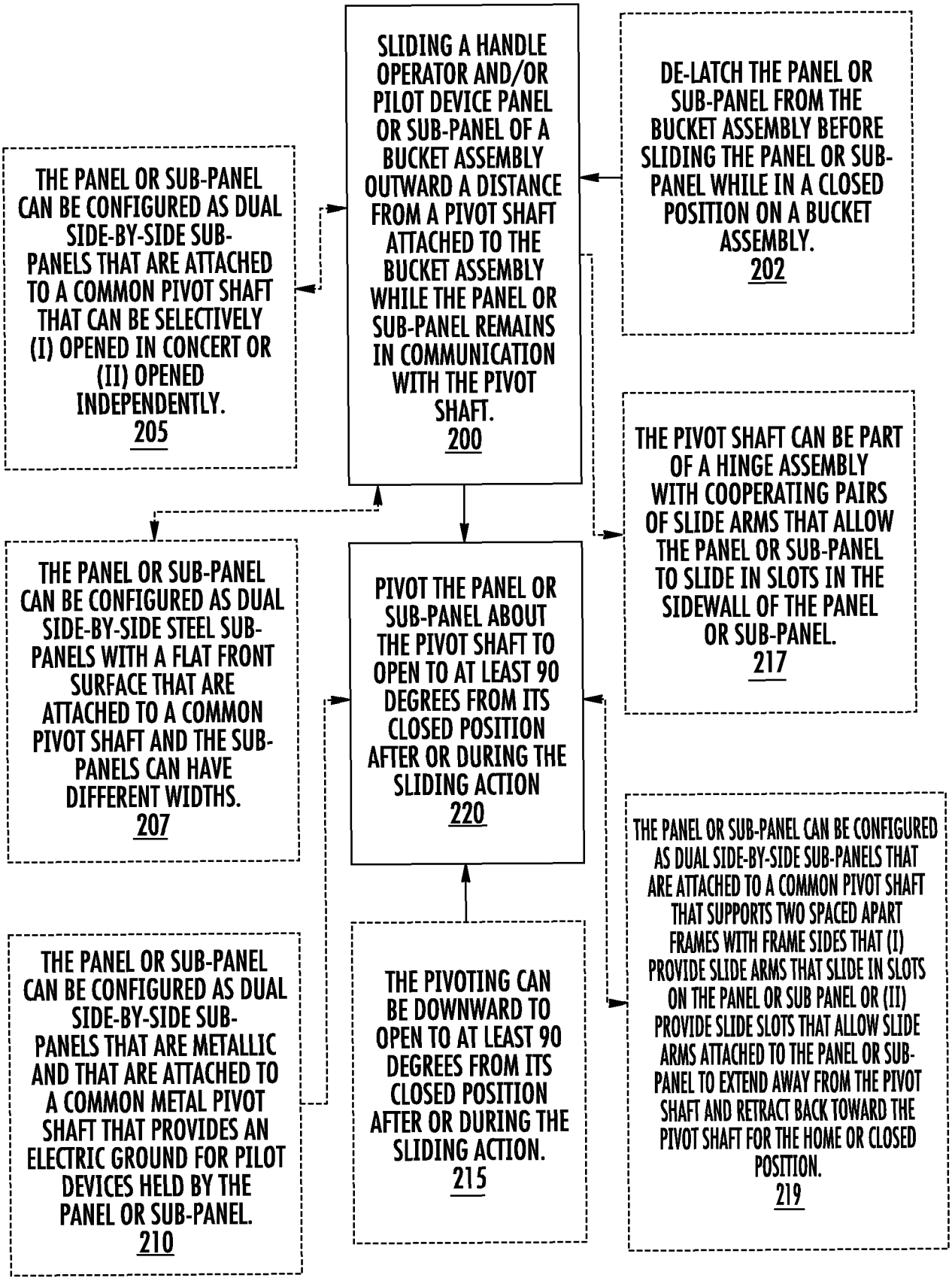
SLIDING A HANDLE OPERATOR AND/OR PILOT DEVICE PANEL OR SUB-PANEL OF A BUCKET ASSEMBLY OUTWARD A DISTANCE FROM A PIVOT SHAFT ATTACHED TO THE BUCKET ASSEMBLY WHILE THE PANEL OR SUB-PANEL REMAINS IN COMMUNICATION WITH THE PIVOT SHAFT.
200
DE-LATCH THE PANEL OR SUB-PANEL FROM THE BUCKET ASSEMBLY BEFORE SLIDING THE PANEL OR SUB-PANEL WHILE IN A CLOSED POSITION ON A BUCKET ASSEMBLY.
202
THE PANEL OR SUB-PANEL CAN BE CONFIGURED AS DUAL SIDE-BY-SIDE SUB-PANELS THAT ARE ATTACHED TO A COMMON PIVOT SHAFT THAT CAN BE SELECTIVELY (I) OPENED IN CONCERT OR (II) OPENED INDEPENDENTLY.
205
THE PIVOT SHAFT CAN BE PART OF A HINGE ASSEMBLY WITH COOPERATING PAIRS OF SLIDE ARMS THAT ALLOW THE PANEL OR SUB-PANEL TO SLIDE IN SLOTS IN THE SIDEWALL OF THE PANEL OR SUB-PANEL.
217
THE PANEL OR SUB-PANEL CAN BE CONFIGURED AS DUAL SIDE-BY-SIDE STEEL SUB-PANELS WITH A FLAT FRONT SURFACE THAT ARE ATTACHED TO A COMMON PIVOT SHAFT AND THE SUB-PANELS CAN HAVE DIFFERENT WIDTHS.
207
PIVOT THE PANEL OR SUB-PANEL ABOUT THE PIVOT SHAFT TO OPEN TO AT LEAST 90 DEGREES FROM ITS CLOSED POSITION AFTER OR DURING THE SLIDING ACTION
220
THE PANEL OR SUB-PANEL CAN BE CONFIGURED AS DUAL SIDE-BY-SIDE SUB-PANELS THAT ARE ATTACHED TO A COMMON PIVOT SHAFT THAT SUPPORTS TWO SPACED APART FRAMES WITH FRAME SIDES THAT (I) PROVIDE SLIDE ARMS THAT SLIDE IN SLOTS ON THE PANEL OR SUB PANEL OR (II) PROVIDE SLIDE SLOTS THAT ALLOW SLIDE ARMS ATTACHED TO THE PANEL OR SUB-PANEL TO EXTEND AWAY FROM THE PIVOT SHAFT AND RETRACT BACK TOWARD THE PIVOT SHAFT FOR THE HOME OR CLOSED POSITION.
219
THE PANEL OR SUB-PANEL CAN BE CONFIGURED AS DUAL SIDE-BY-SIDE SUB-PANELS THAT ARE METALLIC AND THAT ARE ATTACHED TO A COMMON METAL PIVOT SHAFT THAT PROVIDES AN ELECTRIC GROUND FOR PILOT DEVICES HELD BY THE PANEL OR SUB-PANEL.
210
THE PIVOTING CAN BE DOWNWARD TO OPEN TO AT LEAST 90 DEGREES FROM ITS CLOSED POSITION AFTER OR DURING THE SLIDING ACTION.
215

FIG. 27

INTERNATIONAL SEARCH REPORT

International application No
PCT/IB2015/054355

A. CLASSIFICATION OF SUBJECT MATTER
INV. H02B1/36
ADD. H02B1/38

According to International Patent Classification (IPC) or to both national classification and IPC

B. FIELDS SEARCHED

Minimum documentation searched (classification system followed by classification symbols)
H02B

Documentation searched other than minimum documentation to the extent that such documents are included in the fields searched

Electronic data base consulted during the international search (name of data base and, where practicable, search terms used)
EPO-Internal

C. DOCUMENTS CONSIDERED TO BE RELEVANT

Category*	Citation of document, with indication, where appropriate, of the relevant passages	Relevant to claim No.
Y	US 2009/086414 A1 (YEE EDGAR [US] ET AL) 2 April 2009 (2009-04-02) cited in the application the whole document	1-10,19, 20
Y	FR 2 747 877 A1 (FRAMATOME CONNECTORS INT [FR]) 24 October 1997 (1997-10-24) figures 1,2	1-10,19, 20
A	FR 2 814 321 A3 (BOCCHIOTTI SOC IND ELETTROTEC [IT]) 22 March 2002 (2002-03-22) figure 1	1-10,19, 20
X	US 4 090 230 A (FULLER FREDERICK B ET AL) 16 May 1978 (1978-05-16) figures 21,22	1-10,19, 20

-/--

[X] Further documents are listed in the continuation of Box C.

[X] See patent family annex.

* Special categories of cited documents :

"A" document defining the general state of the art which is not considered to be of particular relevance

"E" earlier application or patent but published on or after the international filing date

"L" document which may throw doubts on priority claim(s) or which is cited to establish the publication date of another citation or other special reason (as specified)

"O" document referring to an oral disclosure, use, exhibition or other means

"P" document published prior to the international filing date but later than the priority date claimed

"T" later document published after the international filing date or priority date and not in conflict with the application but cited to understand the principle or theory underlying the invention

"X" document of particular relevance; the claimed invention cannot be considered novel or cannot be considered to involve an inventive step when the document is taken alone

"Y" document of particular relevance; the claimed invention cannot be considered to involve an inventive step when the document is combined with one or more other such documents, such combination being obvious to a person skilled in the art

"&" document member of the same patent family

Date of the actual completion of the international search	Date of mailing of the international search report
11 August 2015	26/10/2015

Name and mailing address of the ISA/	Authorized officer
European Patent Office, P.B. 5818 Patentlaan 2 NL - 2280 HV Rijswijk Tel. (+31-70) 340-2040, Fax: (+31-70) 340-3016	Overdijk, Jaco

INTERNATIONAL SEARCH REPORT

International application No
PCT/IB2015/054355

C(Continuation). DOCUMENTS CONSIDERED TO BE RELEVANT

Category*	Citation of document, with indication, where appropriate, of the relevant passages	Relevant to claim No.
X	US 2 809 085 A (SCOTT FALL HERBERT) 8 October 1957 (1957-10-08) figure 1 -----	1-10,19, 20

INTERNATIONAL SEARCH REPORT

International application No.
PCT/IB2015/054355

Box No. II Observations where certain claims were found unsearchable (Continuation of item 2 of first sheet)

This international search report has not been established in respect of certain claims under Article 17(2)(a) for the following reasons:

1. ☐ Claims Nos.:
because they relate to subject matter not required to be searched by this Authority, namely:

2. ☐ Claims Nos.:
because they relate to parts of the international application that do not comply with the prescribed requirements to such an extent that no meaningful international search can be carried out, specifically:

3. ☐ Claims Nos.:
because they are dependent claims and are not drafted in accordance with the second and third sentences of Rule 6.4(a).

Box No. III Observations where unity of invention is lacking (Continuation of item 3 of first sheet)

This International Searching Authority found multiple inventions in this international application, as follows:

see additional sheet

1. ☐ As all required additional search fees were timely paid by the applicant, this international search report covers all searchable claims.

2. ☐ As all searchable claims could be searched without effort justifying an additional fees, this Authority did not invite payment of additional fees.

3. ☐ As only some of the required additional search fees were timely paid by the applicant, this international search report covers only those claims for which fees were paid, specifically claims Nos.:

4. ☒ No required additional search fees were timely paid by the applicant. Consequently, this international search report is restricted to the invention first mentioned in the claims; it is covered by claims Nos.:

1-10, 19, 20

Remark on Protest

☐ The additional search fees were accompanied by the applicant's protest and, where applicable, the payment of a protest fee.

☐ The additional search fees were accompanied by the applicant's protest but the applicable protest fee was not paid within the time limit specified in the invitation.

☐ No protest accompanied the payment of additional search fees.

FURTHER INFORMATION CONTINUED FROM PCT/ISA/ 210

This International Searching Authority found multiple (groups of) inventions in this international application, as follows:

1. claims: 1-10, 19, 20

   A bucket assembly having a panel connected thereto with a telescopic hinge

   ---

2. claims: 11-18

   A bucket assembly having a support member pivotable about the shaft of a hinge assembly

   ---

INTERNATIONAL SEARCH REPORT

Information on patent family members

International application No
PCT/IB2015/054355

Patent document cited in search report	Publication date	Patent family member(s)	Publication date
US 2009086414 A1	02-04-2009	CA 2698957 A1	02-04-2009
		CN 101809835 A	18-08-2010
		EP 2195896 A2	16-06-2010
		US 2009086414 A1	02-04-2009
		WO 2009040655 A2	02-04-2009
FR 2747877 A1	24-10-1997	NONE	
FR 2814321 A3	22-03-2002	ES 1049998 U	01-02-2002
		FR 2814321 A3	22-03-2002
		IT GE20000033 U1	20-03-2002
US 4090230 A	16-05-1978	CA 1089070 A	04-11-1980
		MX 144367 A	05-10-1981
		US 4090230 A	16-05-1978
US 2809085 A	08-10-1957	NONE	