(12) INTERNATIONAL APPLICATION PUBLISHED UNDER THE PATENT COOPERATION TREATY (PCT)

(19) World Intellectual Property Organization
International Bureau

(43) International Publication Date
25 June 2015 (25.06.2015)

WIPO | PCT

(10) International Publication Number
WO 2015/091027 A1

(51) International Patent Classification:
A47J 31/40 (2006.01) *A23L 1/00* (2006.01)

(21) International Application Number:
PCT/EP2014/076734

(22) International Filing Date:
5 December 2014 (05.12.2014)

(25) Filing Language: English

(26) Publication Language: English

(30) Priority Data:
13199107.7 20 December 2013 (20.12.2013) EP

(71) Applicant: **NESTEC S.A.** [CH/CH]; CT-IAM, Avenue Nestlé 55, CH-1800 Vevey (CH).

(72) Inventor: **KREUSS, Markus**; Hötschigen 572, CH-3510 Konolfingen (CH).

(74) Agent: **DUCREUX, Marie**; CT-IAM, Avenue Nestlé 55, CH-1800 Vevey (CH).

(81) Designated States *(unless otherwise indicated, for every kind of national protection available)*: AE, AG, AL, AM, AO, AT, AU, AZ, BA, BB, BG, BH, BN, BR, BW, BY, BZ, CA, CH, CL, CN, CO, CR, CU, CZ, DE, DK, DM, DO, DZ, EC, EE, EG, ES, FI, GB, GD, GE, GH, GM, GT, HN, HR, HU, ID, IL, IN, IR, IS, JP, KE, KG, KN, KP, KR, KZ, LA, LC, LK, LR, LS, LU, LY, MA, MD, ME, MG, MK, MN, MW, MX, MY, MZ, NA, NG, NI, NO, NZ, OM, PA, PE, PG, PH, PL, PT, QA, RO, RS, RU, RW, SA, SC, SD, SE, SG, SK, SL, SM, ST, SV, SY, TH, TJ, TM, TN, TR, TT, TZ, UA, UG, US, UZ, VC, VN, ZA, ZM, ZW.

(84) Designated States *(unless otherwise indicated, for every kind of regional protection available)*: ARIPO (BW, GH, GM, KE, LR, LS, MW, MZ, NA, RW, SD, SL, ST, SZ, TZ, UG, ZM, ZW), Eurasian (AM, AZ, BY, KG, KZ, RU, TJ, TM), European (AL, AT, BE, BG, CH, CY, CZ, DE, DK, EE, ES, FI, FR, GB, GR, HR, HU, IE, IS, IT, LT, LU, LV, MC, MK, MT, NL, NO, PL, PT, RO, RS, SE, SI, SK, SM, TR), OAPI (BF, BJ, CF, CG, CI, CM, GA, GN, GQ, GW, KM, ML, MR, NE, SN, TD, TG).

Declarations under Rule 4.17:

— *as to applicant's entitlement to apply for and be granted a patent (Rule 4.17(ii))*

— *as to the applicant's entitlement to claim the priority of the earlier application (Rule 4.17(iii))*

— *of inventorship (Rule 4.17(iv))*

[Continued on next page]

(54) Title: PROCESS FOR PREPARING FOAMED MILK

(57) Abstract: The invention concerns a process for producing a foamed milk, said process comprising the steps of : a) - reconstituting milk by dissolution of a milk powder or a milk concentrate with a diluent, said milk powder or milk concentrate being selected in the list of : low heat milk powder, medium heat milk powder, low heat milk concentrate and medium heat milk concentrate, b) - adjusting the pH of the milk between 6,8 and 7,5, and c) - simultaneously or subsequently to the pH adjustment of step b), whipping the milk.

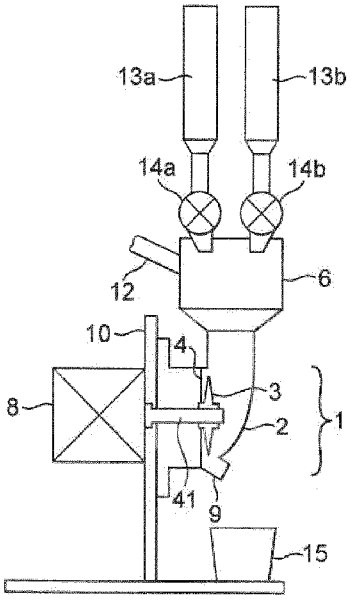

FIG. 1

WO 2015/091027 A1

Published:

— *with international search report (Art. 21(3))*

PROCESS FOR PREPARING FOAMED MILK

Field of the invention

The present invention relates to beverages comprising foamed milk and process for improving the foamability of such beverages.

Background of the invention

A trend in the field of beverages concerns beverages comprising milk and in particular foamed milk. Beverages comprising coffee and foamed like latte macchiatos, cappuccinos are more and more consumed.

Usually these beverages are prepared from fresh milk which is frothed with steam inside a frothing device. Resulting fresh milk foam is excellent in terms of taste and texture. Yet such frothing devices are often manually handled. Consequently the quality of the foam can depend on the experience of the person preparing the foam. Moreover these frothing devices are often hard to clean which can create hygiene issues. Finally fresh milk has to be refrigerated and presents short shelf life.

It is possible to prepare beverages with milk foam with more convenient and automatic beverage preparation machines. In particular it is known to prepare milk foam from soluble milk powders and milk concentrates by mechanically whipping one of said ingredient with a diluent - usually water - by means of a mixer, a whipper, an agitator or by means of water jets. The mechanical agitator is usually a whipper actuated by a motor

In order to improve the quality of the foam prepared with these machines nad these ingredients it has been proposed particular whippers like the whippers described in EP 1 476 060 or WO 2013/149942. Yet it has never been proposed to provide a milk starting ingredient which could present improved foamability properties when mechanically reconstituted and mechanically frothed.

It is known to add additives like foam boosters in milk powders. Yet these powders are dedicated to the preparation of foamy beverage in a cup by pouring water on the powder. Such additives are not desired for beverage preparation with a mechanical whipper. Moreover these additives raise costs of the milk component and can impact the taste of the foam.

In EP 1 903 885 it has been proposed to add a multivalent ion source like a calcium source in milk powder before or while it is mixed with water and whipped.

It is an object of the present invention to propose a process to improve foaming of milk when said milk is prepared in a beverage dispenser.

It is an object of the present invention to propose a process to improve foaming of milk when said milk is prepared in a beverage dispenser starting from milk powder or milk concentrate.

Summary of the invention

The invention concerns a process for producing a foamed milk, said process comprising the steps of :

a) - reconstituting milk by dissolution of a milk powder or a milk concentrate with a diluent, said milk powder or milk concentrate being selected in the list of : low heat milk powder, medium heat milk powder, low heat milk concentrate and medium heat milk concentrate,

b) - adjusting the pH of the milk between 6,8 and 7,5, and

c) - simultaneously or subsequently to the pH adjustment of step b), whipping the milk.

In the process of the present invention the raw material can be a milk powder or a milk concentrate.

If a milk powder is used as a raw material it is selected in low and medium heat milk powders. Low and medium heat milk powders are defined according to the heat treatment classification based on the whey protein nitrogen index (WPNI) of the milk powder. This whey protein nitrogen index (WPNI) refers to the amount of still denaturable serum protein left in the powder after heat treatment as described in literature, especially in "Walstra, P., J.T.M. Wouters, T.J. Geurts, Dairy Science and Technology, Second ed., Boca Raton : CRC Taylor & Francis", page 530. In the present invention the raw material can be a low heat milk powder that is a powder presenting a whey protein nitrogen index (WPNI) greater than 6,0 mg N/g or a medium heat milk powder presenting a WPIN comprised between 4,0 and 5,99 mg N/g.

Preferably the milk powder is agglomerated.

If a milk concentrate is used as a raw material it is selected between low and medium heat milk concentrates. Low and medium heat milk concentrates are defined according to the same above heat treatment classification based on the whey protein nitrogen index (WPNI) of the milk powder derived from the concentrate.

Milk powders and milk concentrates cover powders and concentrates with any fat level such as full fat milk, skimmed milk, semi skimmed milk for example.

In step a) milk can be reconstituted by dissolving the milk powder or the milk concentrate in a diluent, generally water. Dissolution is usually achieved by mixing the powder or the concentrate with the diluent. The temperature of the diluent can depend on the nature of the final prepared beverage which can be either hot or cold. Preferably the diluent is hot water

presenting a temperature comprised between 75 and 85°C.

In step b) pH of milk is adjusted in order to reach a pH comprised between 6,8 and 7,5, in another aspect between about 6,9 and about 7,4, in another aspect between about 7,0 and about 7,3, in another aspect between 7,0 and 7,2. Since the pH of milk is usually of about 6,7 pH of milk is raised by adding a component able to raise said pH. Such a component can be selected in the list of the following components : phosphate salts, citrate salts, hydroxides, carbonates and combinations thereof.

When the process starts from milk powder as a raw material, the process can be implemented according to two different modes.

According to a first mode step a) occurs before step b).

According to a second mode steps a) and b) can occur simultaneously, preferably inside a dissolution chamber in which milk powder is dissolved. The at least one component able to raise the pH of milk is introduced with the milk powder and the diluent. According to said second mode, when a milk powder is used as a raw material, said powder can comprise an additive for adjusting the pH of the reconstituted milk when said powder is dissolved with water. Consequently the mere fact of dissolving the powder with a diluent, preferably water, enables the implementation of step b) simultaneously to step a). Said additive can be comprised in the list of the following components : phosphate salts, citrate salts, hydroxides, carbonates and combinations thereof.

Step c) aims at whipping the milk of which pH has been adjusted in order to get whipped milk. Whipping can occur according to any known methods.

Preferably the step of whipping is done mechanically, more preferably this step is implemented with a mechanical whipper inside a whipping chamber. Generally the whipper is actuated by a motor.

Alternatively the whipping can be implemented with at least one water jet, said at least one water jet hitting the milk and frothing it. Simultaneously said at least one water jet can provide water to dissolve milk powder or milk concentrate in order to foam the milk. Such a type of whipping is described in WO 2010/034722 for example.

Step c) can occur after step b) or simultaneously to step b). In practice a component able to raise pH of milk can be added to milk while it is whipped. The whipping enables the mixing of said component with milk.

According to the preferred embodiment the process of the present invention is implemented in a beverage dispenser comprising a container for storing milk, a milk powder or a milk concentrate, a device for dosing milk, the powder or the milk concentrate and a whipping

chamber for mixing a dose of milk, milk powder or milk concentrate and optionally a diluent.

According to an embodiment of the process of the present invention the foamed milk resulting from step c) can be mixed with a non-milk beverage component. Non-milk beverage component relates to a beverage that does not comprise milk. Such a component can be coffee, tea or a beverage component in which milk is not the major component like chocolate reconstituted from chocolate powder.

The present invention presents the advantage of enabling the improvement of the foaming properties of a milk powder or a milk concentrate when it is used in a beverage dispenser. The present invention presents a significant advantage because current milk powders or milk concentrates can be used in beverage dispensers, yet their foaming properties can be improved inside the dispenser itself.

Brief description of the drawings

The characteristics and advantages of the invention will be better understood in relation to the following figures.

Figure 1 is a schematic diagram a beverage dispenser configured for preparing foamed milk beverages.

Detailed description of the Figure

With reference to **Figure 1** the beverage dispenser comprises at least one beverage ingredient container 13a, 13b connected to a dosing unit 14 able to provide beverage ingredient doses to a dissolution chamber 6. The containers 13a, 13b can be disposable tanks like a cartridge, a can or tin, a pouch, ... or it can be non-disposable containers that are refilled with beverage ingredients. The beverage ingredient can be any ingredient that forms a beverage when mixed with a liquid diluent, preferably water. It can be a soluble powder or a soluble liquid concentrate. According to the invention it is preferably milk powder or milk concentrate. When several ingredient containers 13a, 13b are present, they preferably contain different beverage ingredients. For example one can store a semi skimmed milk powder and the other one can store skimmed milk powder.

The dosing unit comprises means for dosing the beverage ingredient. This means can be a dosing screw, a dosing auger, perforated discs for a milk powder or a peristaltic pump for a milk concentrate. The dosing unit is placed at the bottom of the container to receive the beverage ingredient therefrom by gravity.

The dose of beverage ingredient issued from the dosing unit is delivered to the dissolution chamber 6 where it is mixed with a diluent, usually water, introduced from a diluent inlet 12. The shape of the chamber 6 and the orientation of the diluent inlet 12 are such that the diluent creates a sufficiently turbulent stream that helps the dissolution of the beverage ingredient in the diluent in the chamber. The mixture of the dissolved beverage ingredient is then introduced in a mixing device 1 comprising a whipper housing 2 and a back wall 4. The assembly of the whipper housing 2 and the back wall 4 forms a chamber in which is lodged a rotor 3 such as an impeller. The rotor is connected to a drive shaft 41 fixed to the frame 10 of the dispenser. The drive shaft is actuated by a motor 8. The whipped beverage leaves the mixing device 1 through an outlet 7 that can be connected to an outlet tube 9 and is delivered in a cup 15.

Examples

Comparative Example 1 : preparation of foamed milk from milk powder according to prior art

Milk was reconstituted from an agglomerated low heat milk powder presenting a WPNI of 6,93 mg N/g : powder was dissolved in water in a weight ratio of 9,3 g of powder for 90,7 of water at ambient temperature by gentle stirring in order to reconstitute milk. The pH of said reconstituted milk was 6,7. Then 100 ml of said reconstituted milk was heated at 80°C and introduced through the opened top of the mixing bowl of a beverage dispenser referenced as Milano and commercialised by Nestlé Professional. This dispenser is configured according to the general principle illustrated to Figure 1 except that it comprises several containers 13 and several corresponding mixing bowls 6 in order to prepare different beverages. In the present example, since milk was not reconstituted inside the mixing bowl of the dispenser, the dosing unit was not activated and no diluent was introduced through the diluent inlet 12 during the beverage preparation. The whipper was actuated during 13,5 seconds once heated reconstituted milk was introduced in the mixing bowl. After starting the whipper the valve closing the outlet 9 was opened to deliver foamed milk in a graduated transparent beaker at the dispensing area of the dispenser.

Example 2 : preparation of foamed milk from fresh milk according to the invention

A foamed milk was prepared from the same fresh milk and in the same conditions as in Example 1 except that the pH of the reconstituted milk was raised from 6,7 to 7,1 by adding Na_2CO_3 before its introduction in the mixing bowl of the beverage dispenser.

Comparative Example 3 : preparation of foamed milk according to prior art

Example 1 was reproduced except that the milk powder was introduced in the powder container of the dispenser and foamed milk was ordered from the dispenser. Consequently the reconstitution and the whipping of the milk were implemented simultaneously in the mixing bowl of the dispenser.

The foamed milk was dispensed in a graduated transparent beaker at the dispensing area of the dispenser.

Example 4 : preparation of foamed milk according to the invention

Example 3 was reproduced except that milk powder was mixed with powder of Na_2CO_3 inside the dispenser powder container. The ratio of the powders mixture was defined so that milk reconstituted from the mixed powders presents a pH of 7,1.

Results

The foamability and the texture of the foamed milks of Examples 1, 2, 3 and 4 were measured as follows.

Foamability relates to the foam volume and was deduced from the height of foam in the graduated transparent beaker

Texture relates to foam stiffness and was determined with a Texture analyser TA-HDi Penetration tests were performed with the following parameters :

- 50 mm diameter cylindrical probe or 35 mm cylindrical aluminium probe,
- 1 mm/s penetration speed,
- 20 mmm deep in the foam.

The value of the maximal force was selected to express foam stiffness. Table 1 summarises the results for powders of examples 1, 2 and 3

Table 1

	Foamed milk of Example 1	Foamed milk of Example 2	Foamed milk of Example 3	Foamed milk of Example 4
Foamability (ml)	115,70	132,43	34,02	36,53
Texture/max force (g)	8,02	8,26	3,17	3,64

The results illustrate how foamed milks prepared with the process of the present invention presented increased foaming qualities in term of quantity and texture.

Results also illustrate the difference in foaming between :

- a milk pre-reconstituted from a milk power and water and subsequently foamed in a machine and
- a milk simultaneously reconstituted from a milk powder and foamed in a machine.

Yet whatever the process used for preparing the foamed milk the present invention improves the foaming qualities of the raw material.

CLAIMS

1. Process for producing a foamed milk, said process comprising the steps of :
a) - reconstituting milk by dissolution of a milk powder or a milk concentrate with a diluent, said milk powder or milk concentrate being selected in the list of : low heat milk powder, medium heat milk powder, low heat milk concentrate and medium heat milk concentrate,
b) - adjusting the pH of the milk between 6,8 and 7,5, and
c) - simultaneously or subsequently to the pH adjustment of step b), whipping the milk.

2. Process according to Claim 1 wherein pH of milk is raised by adding a component able to raise said pH.

3. Process according to Claim 2 wherein the component added in order to raise the pH is comprised in the list of the following products : phosphate salts, citrate salts, hydroxides, carbonates and combinations thereof.

4. Process according to any one of the precedent claims, wherein milk is reconstituted from milk powder and step a) occurs before step b).

5. Process according to any one of Claims 1 to 3, wherein milk is reconstituted from milk powder and steps a) and b) occur simultaneously.

6. Process according to the precedent claim, wherein milk powder comprises an additive for adjusting the pH of the reconstituted milk when said powder is dissolved with water.

7. Process according to the precedent claim wherein said additive is comprised in the list of the following components : phosphate salts, citrate salts, hydroxides, carbonates and combinations thereof.

8. Process according to any one of the precedent claims, wherein in step c) whipping is implemented with a mechanical whipper inside a whipping chamber.

9. Process according to any one of Claims 1 to 7, wherein in step c) whipping is implemented with at least one water jet, said at least one water jet hitting milk and frothing it.

10. Process according to any one of the precedent claims wherein the whipped milk resulting from step c) is mixed with a non-milk beverage component.

11. Process according to any one of the precedent claims the process is implemented inside a beverage dispenser.

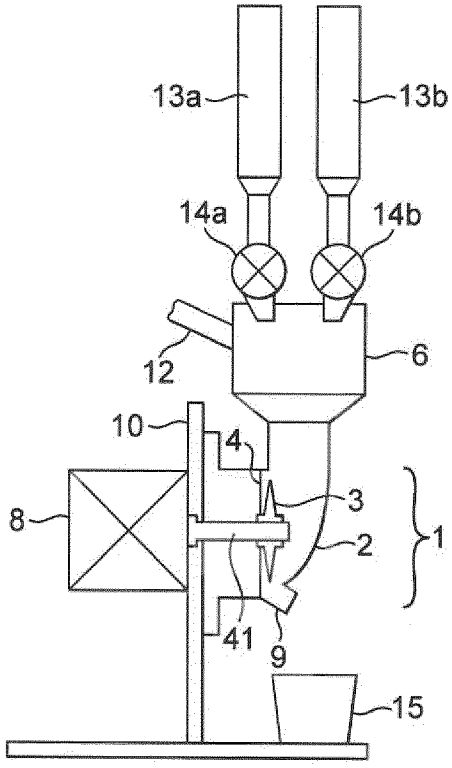

FIG. 1

INTERNATIONAL SEARCH REPORT

International application No
PCT/EP2014/076734

A. CLASSIFICATION OF SUBJECT MATTER
INV. A47J31/40 A23L1/00
ADD.

According to International Patent Classification (IPC) or to both national classification and IPC

B. FIELDS SEARCHED

Minimum documentation searched (classification system followed by classification symbols)
A47J A23L

Documentation searched other than minimum documentation to the extent that such documents are included in the fields searched

Electronic data base consulted during the international search (name of data base and, where practicable, search terms used)
EPO-Internal

C. DOCUMENTS CONSIDERED TO BE RELEVANT

Category*	Citation of document, with indication, where appropriate, of the relevant passages	Relevant to claim No.
A	WO 2013/149942 A1 (NESTEC SA) 10 October 2013 (2013-10-10) cited in the application figure 1	1,8,10, 11
A	US 2005/079265 A1 (UFHEIL GERHARD ET AL) 14 April 2005 (2005-04-14) cited in the application paragraph [0039]	1,8,10, 11
A	WO 2010/034722 A1 (NESTEC SA) 1 April 2010 (2010-04-01) cited in the application figures 1,2	1,9-11
A	US 2007/009636 A1 (SHER ALEXANDER A ET AL) 11 January 2007 (2007-01-11) cited in the application claim 21	1

☐ Further documents are listed in the continuation of Box C.

☒ See patent family annex.

* Special categories of cited documents :

"A" document defining the general state of the art which is not considered to be of particular relevance

"E" earlier application or patent but published on or after the international filing date

"L" document which may throw doubts on priority claim(s) or which is cited to establish the publication date of another citation or other special reason (as specified)

"O" document referring to an oral disclosure, use, exhibition or other means

"P" document published prior to the international filing date but later than the priority date claimed

"T" later document published after the international filing date or priority date and not in conflict with the application but cited to understand the principle or theory underlying the invention

"X" document of particular relevance; the claimed invention cannot be considered novel or cannot be considered to involve an inventive step when the document is taken alone

"Y" document of particular relevance; the claimed invention cannot be considered to involve an inventive step when the document is combined with one or more other such documents, such combination being obvious to a person skilled in the art

"&" document member of the same patent family

Date of the actual completion of the international search	Date of mailing of the international search report
8 January 2015	26/01/2015

Name and mailing address of the ISA/	Authorized officer
European Patent Office, P.B. 5818 Patentlaan 2 NL - 2280 HV Rijswijk Tel. (+31-70) 340-2040, Fax: (+31-70) 340-3016	Reichhardt, Otto

INTERNATIONAL SEARCH REPORT

Information on patent family members

International application No
PCT/EP2014/076734

Patent document cited in search report	Publication date	Patent family member(s)	Publication date
WO 2013149942 A1	10-10-2013	AU 2013245068 A1	23-10-2014
		CA 2869509 A1	10-10-2013
		WO 2013149942 A1	10-10-2013
US 2005079265 A1	14-04-2005	AT 355781 T	15-03-2007
		AU 2003245520 A1	04-09-2003
		BR 0307526 A	21-12-2004
		DE 60312306 T2	22-11-2007
		DK 1476060 T3	04-06-2007
		EP 1476060 A2	17-11-2004
		ES 2281650 T3	01-10-2007
		JP 4051033 B2	20-02-2008
		JP 2005516710 A	09-06-2005
		MX PA04007829 A	15-10-2004
		NZ 535021 A	31-03-2006
		PT 1476060 E	30-04-2007
		US 2003150879 A1	14-08-2003
		US 2005079265 A1	14-04-2005
		WO 03068039 A2	21-08-2003
		ZA 200407239 A	27-09-2005
WO 2010034722 A1	01-04-2010	AT 504230 T	15-04-2011
		AU 2009295921 A1	01-04-2010
		CA 2738020 A1	01-04-2010
		CN 102223828 A	19-10-2011
		CN 103815788 A	28-05-2014
		EP 2168468 A1	31-03-2010
		EP 2348931 A1	03-08-2011
		ES 2362955 T3	15-07-2011
		ES 2391615 T3	28-11-2012
		HK 1142251 A1	15-07-2011
		JP 5474071 B2	16-04-2014
		JP 2012503495 A	09-02-2012
		JP 2014094299 A	22-05-2014
		NZ 591887 A	31-08-2012
		NZ 601707 A	30-08-2013
		RU 2011116214 A	27-10-2012
		TW 201029611 A	16-08-2010
		US 2011177220 A1	21-07-2011
		WO 2010034722 A1	01-04-2010
US 2007009636 A1	11-01-2007	AT 500740 T	15-03-2011
		AU 2006268988 A1	18-01-2007
		BR PI0613512 A2	11-01-2011
		CA 2614798 A1	18-01-2007
		CN 101262777 A	10-09-2008
		EP 1903885 A1	02-04-2008
		ES 2360301 T3	02-06-2011
		HK 1118670 A1	08-07-2011
		JP 4714773 B2	29-06-2011
		JP 2009500046 A	08-01-2009
		NZ 565697 A	31-03-2011
		US 2007009636 A1	11-01-2007
		WO 2007006432 A1	18-01-2007