Office de la Propriété Intellectuelle du Canada
Un organisme d'Industrie Canada

Canadian Intellectual Property Office
An agency of Industry Canada

CA 2481486 C 2012/06/12

(11)(21) **2 481 486**

(12) **BREVET CANADIEN**
CANADIAN PATENT

(13) **C**

(86) Date de dépôt PCT/PCT Filing Date: 2003/04/09
(87) Date publication PCT/PCT Publication Date: 2003/10/23
(45) Date de délivrance/Issue Date: 2012/06/12
(85) Entrée phase nationale/National Entry: 2004/10/07
(86) N° demande PCT/PCT Application No.: US 2003/010816
(87) N° publication PCT/PCT Publication No.: 2003/086267
(30) Priorités/Priorities: 2002/04/10 (US60/371,448); 2003/02/18 (US10/369,247); 2003/02/18 (US10/369,244); 2003/02/18 (US10/368,951); 2003/02/18 (US10/369,427)

(51) Cl.Int./Int.Cl. *A61K 9/48* (2006.01), *A61J 3/07* (2006.01), *A61K 45/06* (2006.01), *A61K 9/52* (2006.01), *A61K 9/64* (2006.01), *B29C 39/10* (2006.01)

(72) Inventeur/Inventor:
MILLER, FRED H., US

(73) Propriétaire/Owner:
MILLER, FRED H., US

(74) Agent: BERESKIN & PARR LLP/S.E.N.C.R.L.,S.R.L.

(54) Titre : SYSTEME CAPSULAIRE A PLUSIEURS COMPARTIMENTS ET PLUSIEURS PHASES
(54) Title: MULTI-PHASE, MULTI-COMPARTMENT CAPSULAR SYSTEM

(57) Abrégé/Abstract:
A multi-compartment capsule, comprising, a first receiving chamber comprising at least one ingredient having a first physical state, wherein said ingredient is selected from the group consisting of a nutraceutical, a vitamin, a dietary supplement and a mineral; and a second receiving chamber comprising at least one ingredient having a second physical state, wherein said ingredient is selected from the group consisting of a nutraceutical, a vitamin, a dietary supplement and a mineral; wherein said first physical state of said ingredient of said first receiving chamber being different from said second physical state of said ingredient of said second receiving chamber; and said ingredient of said first receiving chamber being different from said ingredient of said second receiving chamber.

(12) INTERNATIONAL APPLICATION PUBLISHED UNDER THE PATENT COOPERATION TREATY (PCT)

(19) World Intellectual Property Organization
International Bureau

(43) International Publication Date
23 October 2003 (23.10.2003)

PCT

(10) International Publication Number
WO 2003/086267 A3

(51) International Patent Classification[7]: A61K 9/48, 9/52, 9/64

(21) International Application Number: PCT/US2003/010816

(22) International Filing Date: 9 April 2003 (09.04.2003)

(25) Filing Language: English

(26) Publication Language: English

(30) Priority Data:

60/371,448	10 April 2002 (10.04.2002)	US
10/369,427	18 February 2003 (18.02.2003)	US
10/368,951	18 February 2003 (18.02.2003)	US
10/369,244	18 February 2003 (18.02.2003)	US
10/369,247	18 February 2003 (18.02.2003)	US

(71) Applicant and
(72) Inventor: **MILLER, Fred, H.** [US/US]; 2609 West Tyson Avenue, Tampa, FL 33611 (US).

(72) Inventor; and
(75) Inventor/Applicant *(for US only)*: **AUSEC, Lance, R.** [US/US]; 231 21st Avenue, St. Petersburg, FL 33706 (US).

(74) Agents: **BENT, Stephen, A.** et al.; Foley & Lardner, Washington Harbour, Suite 500, 3000 K Street, N.W., Washington, DC 20007-5101 (US).

(81) Designated States *(national)*: AE, AG, AL, AM, AT, AU, AZ, BA, BB, BG, BR, BY, BZ, CA, CH, CN, CO, CR, CU, CZ, DE, DK, DM, DZ, EC, EE, ES, FI, GB, GD, GE, GH, GM, HR, HU, ID, IL, IN, IS, JP, KE, KG, KP, KR, KZ, LC, LK, LR, LS, LT, LU, LV, MA, MD, MG, MK, MN, MW, MX, MZ, NI, NO, NZ, OM, PH, PL, PT, RO, RU, SC, SD, SE, SG, SK, SL, TJ, TM, TN, TR, TT, TZ, UA, UG, US, UZ, VC, VN, YU, ZA, ZM, ZW.

(84) Designated States *(regional)*: ARIPO patent (GH, GM, KE, LS, MW, MZ, SD, SL, SZ, TZ, UG, ZM, ZW), Eurasian patent (AM, AZ, BY, KG, KZ, MD, RU, TJ, TM), European patent (AT, BE, BG, CH, CY, CZ, DE, DK, EE, ES, FI, FR, GB, GR, HU, IE, IT, LU, MC, NL, PT, RO, SE, SI, SK, TR), OAPI patent (BF, BJ, CF, CG, CI, CM, GA, GN, GQ, GW, ML, MR, NE, SN, TD, TG).

Published:
— *with international search report*
— *with amended claims*

(88) Date of publication of the international search report:
18 December 2003

Date of publication of the amended claims: 29 April 2004

For two-letter codes and other abbreviations, refer to the "Guidance Notes on Codes and Abbreviations" appearing at the beginning of each regular issue of the PCT Gazette.

WO 2003/086267 A3

(54) Title: MULTI-PHASE, MULTI-COMPARTMENT CAPSULAR SYSTEM

(57) Abstract: A multi-compartment capsule, comprising, a first receiving chamber comprising at least one ingredient having a first physical state, wherein said ingredient is selected from the group consisting of a nutraceutical, a vitamin, a dietary supplement and a mineral; and a second receiving chamber comprising at least one ingredient having a second physical state, wherein said ingredient is selected from the group consisting of a nutraceutical, a vitamin, a dietary supplement and a mineral; wherein said first physical state of said ingredient of said first receiving chamber being different from said second physical state of said ingredient of said second receiving chamber; and said ingredient of said first receiving chamber being different from said ingredient of said second receiving chamber.

MULTI-PHASE, MULTI-COMPARTMENT CAPSULAR SYSTEM

BACKGROUND

2. The Field of the Invention

The present invention relates to delivery of active ingredients or medicaments and, more particularly, to novel capsular delivery apparatus and methods for delivering one or more active ingredients or medicaments having diverse physical states (*e.g.*, solid, liquid, gas or dispersion) into a single dosage, multi-compartment capsule.

The present invention further relates to methods for the administration of a plurality of heterogenous chemical and biological compounds to animals and humans using a

multicompartment delivery system for treatment of different conditions or the same condition or diseases (different or same) in one or more organ systems.

3. Background of the Invention

As appreciated by those skilled in the art, the contemplation, design, testing and manufacture of chemicals and biomolecules for administration to humans and animals, as nutritional or therapeutic agents, requires a thorough integration of clinically contemplated delivery principles and modalities. Chemicals and biomolecules that may be administered to humans and animals are often referred to herein as "actives," "active ingredients" or "medicaments."

Oral administration has become one of the most frequent routes for delivering one or more active ingredients or medicaments to the body. Active ingredients or medicaments, such as nutritional or therapeutic agents, may be orally administered in a variety of physical states (*i.e.*, solid, liquid or gas). Tablets and capsules are generally the most common vehicle for the oral delivery of medicaments. As appreciated, a tablet may be broadly characterized as a compressed powder or granular solid. Prior to compression of the granular powder comprising the medicament into tablet form, the presence of one or more excipients may be required. An excipient includes any inert substance (*i.e.*, gum arabic, starch or the like) combined with a principal ingredient to facilitate the preparation of an agreeable or convenient dosage form of the active or medicament. Functional characteristics of excipients may include, for example, disintegration, lubrication, appearance, palatability, shelf-stability or the like.

Those skilled in the art also developed capsules as a contrivance for containing a solid or liquid dosage form of a medicament. Traditional capsular embodiments include a first containment section referred to as a base, and a second containment section referred to as a cap. The two pieces of the capsule are usually formulated and designed in a manner such that the material to be encapsulated may be introduced into the base section, whereas the open end

of the cap section may be correspondingly positioned over the open end of the base. The walls of the cap and base are generally in physical contact with one another to form a single internal cavity. A means for structurally sealing the cap in relation to the base may also be incorporated during manufacture to insure non-tampering of the capsule. In this regard, those skilled in the art developed sealing technology which contemplates banding, heat fusion (spot-welding) and snap seals which utilize a "tongue and groove" scheme.

The outer walls of a capsule are preferably formed of a soluble ingredient, such as, for example, gelatin (animal-based product), starch, hydrophillic polymer or hydroxypropyl methyl-cellulose (HPMC), which provides a barrier for containing the active ingredient or medicament, in powder or liquid form, within the internal periphery of the capsule walls. Traditionally, hard gelatin capsules may be manufactured by dipping plates of stainless steel pins into a pool of gelatin solution. The pins are then removed from the gelatin and rotated while the gelatin is dried in a kiln with forced, humidity-controlled air. Once dried, the gelatin capsules are typically stripped from the pins, trimmed to a suitable length and then joined together (*e.g.*, base and cap) and packaged for production use.

With the advent of automated encapsulation machinery, the responsibility to produce encapsulated products shifted mainly to industrial manufacturers. Contemporaneous with the development of the encapsulation industry, those skilled in the art have advanced the state of the encapsulation art. For example, several significant improvements in encapsulation technology have been seen over the last forty years. These technological improvements have included, for example, the development of soft elastic capsules, film-coating techniques, micro-encapsulation and multiple-compartment technology.

Soft elastic capsules, often referred to as soft gelatin capsules, were developed in an effort to provide means for encapsulating liquids and other medicaments which are typically poorly soluble in water. In preferred design, soft elastic capsules are made from a thicker and more plastic gelatin having an increased flexibility due to the addition of a polyol, such as glycerin or sorbitol. The addition of such plasticizers has been found, however, to have the potential disadvantage of increasing the risk for microbial growth. Thus an antimicrobial,

such as a paraben or sorbic acid, may be added to the soft elastic capsule shell in order to address any microbial concern.

Prior art film-coating techniques generally involve a plating process, whereby a thin, uniform film may be deposited onto the outer surface of the delivery vehicle (*e.g.*, tablet or capsule). Several successive layers may be deposited onto the outer surface of the vehicle, if desired, in an effort to facilitate various desirable properties. For example, sugar-coating, a precursor to film-coating, has been used by those skilled in the art for more than one hundred years to make tablets more palatable. Other advantages or properties of film-coating may include for example, but not by way of limitation, protection from moisture, oxidation, controlling microbial contamination and inhibiting modification of the chemical properties of the active ingredient. As further appreciated by those skilled in the art, prior art film-coating may form an interfacial barrier between two chemicals or chemical compounds that might otherwise react when they come into contact.

Enteric coatings and sustained-release formulations are contemplated as variations on prior art film-coating techniques. In particular, enteric coating describes a process where the delivery vehicle (*e.g.*, tablet or capsule) is coated with one or more layers of chemicals that are somewhat resistant to extreme pH conditions. For example, conditions of extremely low pH are commonly encounter in the stomach. Many active ingredients or medicaments are in the form of a pharmaeceutical salt and thus highly susceptible to ionization in the presence of hydrogen ions. Thus, the presence of an enteric coating generally provides a level of protection as to degradation of the active ingredient or medicament until transit from the stomach into the small intestine is accomplished.

Film coatings have also led to the development of delivery vehicles (*e.g.*, tablets and capsules) having sustained-release properties. Mixtures of waxes, cellulose, silicone and similar resins have been found useful by those skilled in the art for creating-sustained release coatings. In principle, these prior art coatings function to delay the release of the active ingredient or medicament to the targeted body system, thereby facilitating a timed, absorption rate in the body. Furthermore, the entire daily dosage of an active or medicament may be

contained in a single, sustained-release delivery vehicle (*e.g.*, tablet or capsule), whereas the immediate absorption of the entire dosage could possibly lead to an overdosage of the medicament. Thus, by layering quanta of medicament with differential coatings, the dosage undergoes a controlled release over specified time period. The application of sustained-release film coating technology therefore may inherently facilitate the delivery of a total daily dosage amount of an active or medicament to be released to the body in controlled increments.

Over the last several years, a considerable amount of attention has been focused on the further development of multi-compartment capsule technology for the delivery of therapeutic and diagnostic agents. Series formulations teach the use of membranes or other types of barriers to cordon a line of separate chambers within a single encapsulating shell. As appreciated, the purpose of such multi-compartment delivery devices is the administration of multiple dosages. Moreover, multiple-compartment delivery mechanisms of the prior art were developed to circumvent or diminish the effects of harsh pH environments within humans. For example, the prior art contemplates a hard capsule formulation which contains three different compartments of active medicaments for administration to the vaginal and rectal areas. In preferred structure, the formulation outer, rapid-release layer may contain an active medicament and excipient; the middle, intermediate-release layer may include a powder form of active medicament; and the inner, slow-release layer may contain pellets or granules of active medicament.

Also taught in the prior art are multi-compartment capsules having groups of spheroids with pH-dependent coatings which are encapsulated within a hard gelatin shell and provided for treating female yeast infection. The first spheroid is preferably uncoated and may be in a powder form; the second spheroid may contain a pH sensitive coat; and the inner spheroid may include a pH insensitive coat.

In addition to pH-sensitive coatings, hydrogels and other gastric retention technologies have been developed by those skilled in the art in an effort to retard the progression of the delivery vehicle during enteric transit. This retarding action, presumably,

allows the full amount of active medicament to be released and/or targeted to a specific area of the gastrointestinal tract. Hydrogel and related gastric retention devices of the prior art generally rely upon the imbibing of water into a center core which is filled with cellulose or similar water absorbent material. In preferred operation, the material swells and releases multiple compartments of active medicament. The concept of using bulk size to slow transit of single active medicament in a single physical state is thus appreciated.

In an effort to administer active ingredients or medicaments to a specific location in the body to treat a specific disorder caused by a specific pathogen, those skilled in the art have used targeted-release systems using multi-compartment capsular technology. For example, a method for carrying out a triple therapy against the microorganisms *Helicobacter pylori*, a known infectious agent which is believed largely responsible for the development of gastric ulcer disease, was developed which comprises the steps of oral administration of a pharmaeceutical dosage form comprising an internal capsule placed inside an external capsule, wherein the external capsule comprises a soluble salt of bismuth and a first antibiotic, and the internal capsule comprises a second antibiotic. In addition, multi-compartmental capsules were developed which combine a nutrient supplement with a viable direct-fed microbial (*i.e.*, gastrointestinal microorganisms, including bacteria, live cell yeasts, fungi or a combination thereof) for the purpose of treating livestock for feeding disorders and improving feed efficiency.

A disadvantage with prior art encapsulation technology is when the base and corresponding cap of a capsule are joined, dead space volume is typically created within the internal periphery of the capsule. Internal capsular dead space may be filed with an air bubble which may ultimately react with one or more of the active ingredients or medicaments introduced within the capsule, thereby potentially degrading the quality and effectiveness of the active ingredients.

Although the prior art discloses multiple compartment, capsular delivery technology, these manifestations generally includes one of two approaches. For example, one approach contemplates the introduction of a single active or medicament into multiple capsular

compartments to vary the temporal release of the medicament and ultimately the absorption rate into the body. Another approach contemplates the introduction of a plurality of active ingredients or medicaments into different compartments of a single capsule for delivery to a specific area of the body to treat a targeted illness or condition.

The use or contemplation of multiple-compartment capsular delivery apparatus or methods which deliver different physical forms of the same active or medicament, or a variation in physical forms of different actives or medicaments in a single dosage, however, has not heretofore been contemplated in the art. As appreciated by those skilled in the art, active ingredients or medicaments may take the physical form of a solid (*e.g.*, pill, tablet, capsule (both hard and soft elastic), powder, granulation, flakes, troches (lozenges and pastilles), suppositories and semi-solid ointments, pastes, emulsions and creams), a liquid (*e.g.*, solution, spirits, elixir, syrups, sprays and fluid extracts), a gas or a dispersion. A dispersion is a system in which a dispersed phase is distributed through a continuous phase (*e.g.*, aerosols (liquid or solid in gas), suspensions (solid in liquid), emulsion (liquid in liquid), foam (gas in liquid), solid foam (solid in gas) or gel (liquid or solid in solid)). Dispersions can be classified as molecular, colloidal and coarse, depending on size. In many circumstances, however, the different physical forms or phases of more than one active ingredient or medicament may not be suitably combined or mixed together without altering the individual desirable properties of the active ingredient or medicament. For example, although it would be possible and desirable to formulate a dispersion by combining a first active ingredient in the solid state with a second active ingredient that exists as a liquid, adverse chemical interactions between the active ingredients may adversely affect various characteristics of the ingredients, including but not limited to, their shelf lives. The resulting chemical decomposition – and the potential formation of any unwanted side products – could result in diminished drug potency or even toxicity to a patient.

Additionally, the physical properties of crystalline active ingredients could be drastically altered in scenarios where it is desirable to co-administer a crystalline active ingredient with a liquid or semi-liquid different active ingredient. In this context, the control of physical properties such as active ingredient dissolution rate and solubility is often a critical factor in determining the overall bioavailability of the active ingredient. It is well established in the art that different polymorphs or solvates of the same crystalline active

ingredient exhibit dramatically different solubility and dissolution rates. Thus, combining a crystalline active agent with a liquid or semi-liquid active agent could give rise to an equilibrium between concentrations of different polymorphs and/or solvates of the crystalline active ingredient, and thereby frustrate efforts at tailoring an active ingredient mixture to its intended purpose as a medicament.

Another shortcoming with co-administering plural active ingredients in different physical forms in an intimate mixture is the potential for adverse *in vivo* drug-drug interactions upon administration. The desire to co-administer these active ingredients would be offset by the one active ingredient, for example as in a liquid or semi-liquid (e.g., a paste, solution, or syrup) form, becoming rapidly available. In this context, the active ingredient may adversely react with a co-administered drug, for example a less bioavailable solid or semi-solid, in a physiological environment. Thus, the true therapeutic benefit resulting from the pharmacological effects of the individual active agents may never be realized. It would be desirable to co-administer plural active ingredients while insuring against the potential of such harmful drug-drug interactions.

Providing active ingredients or medicaments in separate capsules may also be undesirable in the context of patient compliance. Geriatric and pediatric populations in particular disfavor the handling and consumption of multiple capsules of active ingredients. Patient compliance is essential in maintaining patient health in many dosage regimens. For example, deviations from accurate dosing and consistent consumption of immunosuppressant therapies can result in severe or even lethal consequences for a patient. Providing combined dosages of active ingredients would result in fewer capsules a patient or consumer would have to take, and thereby contribute to an overall increase in compliance.

Therefore, it would be desirable to provide a multi-compartment capsular delivery apparatus and methods that provide active ingredients or medicaments having diverse physical properties (e.g., solid, liquid, gas or dispersion), which may or may not be properly combined or stored together into a unitary structure (i.e., multi-compartment capsule) for usage in a single dosage form. The present invention, in overcoming the shortcomings of the prior art, satisfies these and other objectives.

* * * * *

The art and practice of pharmacy can be divided into four distinct divisions. Pharmacology is the study of interactions occurring between the pharmacologic agent, or medicament and specific targeted cells in the body. More specifically, the interaction between an active agent and a cellular receptor along with the resulting change in cell physiology is examined. Medicinal chemistry is largely concerned with the identification of naturally occurring and synthetic compounds which possess medicinal characteristics.

Pharmacotherapeutics is the holistic application of pharmacy practice to specific pathologies, illnesses, and other body functions. Finally, Pharmaceutical science ascertains or regulates the composition of medicinal substances, and is largely directed to the development of new mechanisms for delivering chemicals and biomolecules into animals and humans. A subcategory of pharmaceutical science is called pharmacokinetics and sometimes generally referred to as biopharmaceutics.

A.D.M.E. is an acronym often used to describe the four essential components to pharmaceutical science: absorption, distribution, metabolism, and elimination, respectively. One way to differentiate between pharmacology and pharmaceutical science is that the former is primarily concerned with the effect of the medicament on the body, whereas, the latter is primarily concerned with the delivery and time-course of the medicament on its journey through the body.

In clinical applications, chemicals and biomolecules are often referred to as active ingredients or medicaments. Medicaments may include "pharmaceuticals, nutraceuticals, biotechnicals, vitamins, minerals and dietary supplements." Oral administration is the most frequent route for delivery of medicaments. Medicaments may be orally administered in a variety of physical states, including, solid, liquid, dispersion, and gaseous forms. As appreciated, tablets and capsules are the most common vehicle for oral delivery of medicaments.

Frequently, a medical or surgical patient may receive a plurality of concurrent medicaments. Data has been accumulated to demonstrate that patients undergoing a surgical procedure may receive ten (10) or more medicaments during the surgery and the resulting surgical recovery period. Some patients who have undergone organ transplantation or who have contracted human immunodeficiency virus (HIV) may receive

three (3) or more medicaments which require multiple administrations per day. HIV patients often receive many more than three (3) medicaments. These medicaments may be necessary for the treatment of several conditions occurring in a plurality of organ systems or they may be necessary to treat a single condition or some combination thereof.

In some cases, it may be desirous to combine a plurality of medicaments because of a synergistic interaction between a plurality of medicaments. This synergy may enhance the efficacy of one or more of the medicaments. Medicaments may be combined to increase the intensity of response or efficacy. A plurality of medicaments, in combination, may be homergic (*i.e.*, ellicit the same quality of effect). In many cases, a plurality of homergic medicaments may also be homodynamic (i.e., interact with the same receptor). A plurality of homergic medicaments may be additive, supra-additive and infra-additive. A plurality of combined medicaments which do not produce the same quality of response may be called, heterergic. When heterergy is found to be a positive effect (i.e., at least one medicament enhances the response to another medicament), this may be called synergism and is sometimes called synergy.

In further cases, it maybe desirous to combine a plurality of medicaments to decrease their individual dosages and possibility for toxicity. It may also be desirous to combine a plurality of medicaments to target the treatment of a disease, illness or condition from divergent angles. It may be desirous to combine a plurality of medicaments to minimize the side effects and adverse effects of one or more medicaments. It may be still further desirous to combine a plurality of medicaments to alter the pharmacokinetic characteristics of one or more medicaments. For example, alterations in the absorption, distribution, metabolism or elimination of one or more medicaments.

Fixed combinations of a plurality of medicaments have been generally disfavored due to any number of perceived disadvantages. These disadvantages may include, for example: (1) complicating the interpretation of safety and efficacy in therapeutic regimens, (2) there may be inter-patient differences to fixed combinations, (3) there may be difficulties in dosage titration, and (4) the delivery platforms for fixed combinations have generally been found to be uneconomical to produce.

On the other hand, fixed combinations of a plurality of medicaments may lead to several therapeutic advantages, including, for example, but not by way of limitation: (1) increasing patient compliance with therapy, (2) increasing efficacy by optimizing timing of medicaments, (3) minimization of side effects and adverse effects, (4) enhancement of pharmacokinetic characteristics of one or more medicaments in a fixed combination, (5) increased patient quality of life, (6) optimization of institutional resources by minimizing the amount of medicament administrations, and (7) minimizing patient length of stay in institutional facilities by optimizing therapy.

Prior art therapeutic technologies contain isolated examples of pharmaceutical formulations containing fixed combinations of medicaments. However, therapeutic technologies of the prior art teach a fixed combination, wherein a plurality of medicaments are placed into a single receiving chamber in the delivery formulation (i.e., no separation between the plurality of medicaments).

In view of the state of the technology as it exists today, generally, therapeutic apparatus and methods are needed to provide a plurality of medicaments for medical and surgical conditions, as well as maintenance of normal health function for delivery to animals and humans using a multi-chambered delivery apparatus. Such apparatus and methods for delivering a plurality of medicaments to animals and humans using a multi-chambered delivery apparatus are contemplated herein.

BRIEF SUMMARY AND OBJECTS OF THE INVENTION

In view of the foregoing, it is a primary object of the present invention to provide novel integrated capsule delivery apparatus and methods for delivering diverse physical states (*e.g.*, solid, liquid, gas or dispersion) of a single active ingredient or medicament, or a plurality of active ingredients or medicaments, in a single dosage form, wherein at least two of the active ingredients or medicaments have physical states that differ.

It is also an object of the present invention to provide novel integrated capsule delivery apparatus and methods which facilitate various desirable properties including, for

example, controlling time-release of key active ingredients or medicaments, prolonging shelf-life of the active ingredients or medicaments, improving palatability, reducing overall production costs and, accordingly, reducing the number of capsules consumed by a patient or consumer as nutritional or therapeutic agents.

Further, it is an object of the present invention to provide novel integrated capsule delivery apparatus and methods for delivering one or more active ingredients or medicaments (*e.g.*, pharmaeceutical, biotechical, nutraceutical, vitamin, dietary supplement, mineral or combination thereof) in the form of a single dosage, multi-compartment capsule having one or more active ingredients in a primary capsule, and one or more active ingredients introduced into a secondary smaller capsule having a size sufficient for being selectively positionable within the primary capsule, wherein the active ingredient(s) within the primary capsule comprises a physical state (*e.g.*, solid, liquid, gas or dispersion) that is different from the physical state of the active ingredient(s) in the secondary capsule.

It is an additional object of the present invention to provide novel integrated capsule delivery apparatus and methods for delivering one or more active ingredients or medicaments (*e.g.*, pharmaeceutical, biotechnical, nutraceutical, vitamin, dietary supplement, mineral or combination thereof) in the form of a single dosage, multi-compartment capsule having one or more active ingredients in a primary capsule and the same active ingredient(s) introduced into a smaller secondary capsule having a size sufficient for being positionable within the primary capsule, wherein the active ingredient(s) in the primary capsule comprises a physical state (*e.g.*, solid, liquid, gas or dispersion) different from the active ingredient(s) in the secondary capsule.

It is a further object of the present invention to provide novel integrated capsule delivery apparatus and methods for delivering one or more active ingredients or medicaments (*e.g.*, pharmaeceutical, biotechnical, nutraceutical, vitamin, dietary supplement, mineral or combination thereof) in the form of a single dosage, multi-compartment capsule wherein at least one of the primary and secondary capsules include a time-release coating for controlling the release of the active ingredient(s) contained therein.

It is also another object of the present invention to provide novel integrated capsule delivery apparatus and methods for delivering one or more active ingredients or medicaments (*e.g.*, pharmaeceutical, biotechnical, nutraceutical, vitamin, dietary supplement, mineral or combination thereof) in the form of a single dosage, multi-compartment capsule having one or more active ingredients in the capsular body, wherein the capsule includes a longitudinally extending body and at least one dividing wall formed along a length of the extending body to form a first chamber and an opposing second chamber within the capsular body and introducing at least one active ingredient or medicament having a first physical state into the first chamber and at least one active ingredient or medicament having a second physical state into a second chamber, whereas the physical state (*e.g.*, solid, liquid, gas or dispersion) of the ingredient(s) in the first chamber is different from the physical state of the ingredient(s) in the second chamber.

It is an additional object of the present invention to provide novel integrated capsule delivery apparatus and methods for delivering one or more active ingredients or medicaments (*e.g.*, pharmaeceutical, biotechnical, nutraceutical, vitamin, dietary supplement, mineral or combination thereof) in the form of a single dosage, multi-compartment capsule having a longitudinally extending body and one or more dividing walls disposed along the length of the longitudinally extending body of the capsule, wherein the capsule and one or more of the dividing walls contained therein may include time-release coatings for controlling the release of the active ingredients or medicaments contained therein, respectively.

It is a further object of the present invention to provide novel integrated capsule delivery apparatus and methods for delivering one or more active ingredients or medicaments (*e.g.*, pharmaeceutical, biotechnical, nutraceutical, vitamin, dietary supplement, mineral or combination thereof) in the form of a single dosage, multi-compartment capsule having a plurality of active ingredients or medicaments having the physical form of a solid (*e.g.*, pill, tablet, capsule (both hard and soft elastic), powder, granulation, flakes, troches (lozenges and pastilles), suppositories and semi-solid ointments, pastes, emulsions and creams), a liquid (*e.g.*, solution, spirits, elixir and fluid extracts), a gas or a dispersion (*e.g.*, aerosols (liquid or

solid in gas), suspensions (solid in liquid), emulsion (liquid in liquid), foam (gas in liquid), solid foam (solid in gas) or gel (liquid or solid in solid), wherein the physical form of the active ingredients differ between a primary and secondary capsule, and between one or more dividing walls disposed in spaced-apart relationship along the length of a longitudinally extending capsular body.

It is a still further object of the present invention to provide novel integrated capsule delivery apparatus and methods for delivering one or more active ingredients or medicaments (*e.g.*, pharmaeceutical, biotechnical, nutraceutical, vitamin, dietary supplement, mineral or combination thereof) in the form of a single dosage, multi-compartment capsule, wherein an encapsulation process comprises the steps of: (1) providing a capsule comprising a first end, a second end, a longitudinally extending body having a length disposed between the first and second ends, and a plurality of dividing walls spaced apart along the length of the extending body, wherein the dividing walls form a plurality of receiving chambers; (2) introducing at least one active ingredient having a first physical state into a first receiving chamber; (3) introducing at least one active ingredient having a second physical state into a second receiving chamber; (4) introducing at least one active ingredient having a third physical state into a third receiving chamber, wherein the physical states of at least two of the active ingredients introduced into the first, second or third receiving chambers differ; and (5) sealing the first and second ends of said capsule.

Additionally, it is an object of the present invention to provide novel integrated capsule delivery apparatus and methods for delivering a single dosage, multi-compartment capsule comprising a capsular base and cap configuration, wherein the size and shape of the cap, relative to its sealing relationship with the base, generally eliminates or substantially reduces any potential dead space volume within the internal periphery of the capsule, thereby functionally negating the opportunity for reaction between an air bubble and one or more active ingredients introduced into the capsule and, accordingly, improving stability of the capsular ingredient(s).

Consistent with the foregoing objects, and in accordance with the invention as embodied and broadly described herein, one presently preferred embodiment of the novel integrated capsule delivery apparatus and methods of the present invention comprises a multi-compartment capsule including a primary capsule and a secondary capsule selectively positionable within an internal periphery of the primary capsule. The secondary capsule may include a base, a corresponding cap and one or more receiving chambers. Each of the receiving chambers of the secondary capsule may be formed having an internal periphery sufficient for receiving at least one active ingredient or medicament (*e.g.*, pharmaeceutical, biotechnical, nutraceutical, vitamin, dietary supplement, mineral or combination thereof) therein. Similarly, the primary capsule may be formed having a base, a corresponding cap and one or more receiving chambers. The receiving chambers of the primary capsule may be formed having an internal periphery sufficient for receiving the secondary capsule and one or more active ingredients or medicaments (*e.g.*, pharmaeceutical, biotechnical, nutraceutical, vitamin, dietary supplement, mineral or combination thereof) having a physical state (*i.e.*, solid, liquid, gas or dispersion) different from the physical state of the active ingredient(s) housed within the receiving chamber of the secondary capsule.

As further contemplated herein, a multi-compartment capsule is provided comprising a base, a corresponding cap and one or more dividing walls positionable between the base and the cap. Structurally, the size, shape and positioning of the dividing walls relative to the base and corresponding cap facilitates the formation of at least two, independent and separate receiving chambers. Each of the receiving chambers having an internal periphery sufficient for receiving one or more active ingredients or medicaments (*e.g.*, pharmaeceutical, biotechnical, nutraceutical, vitamin, dietary supplement, mineral or combination thereof) therein. In preferred design, the physical state (*e.g.*, solid, liquid, gas or dispersion) of the active ingredient(s) in the first receiving chamber is different from the physical state of the active ingredient(s) in the second receiving chamber. After introducing one or more active ingredients or medicaments into each receiving chamber, the cap may be selectively

positioned in sealing relationship with the base to form one presently preferred embodiment of the single, dosage multi-compartment capsule.

One presently preferred embodiment of an encapsulation process for forming a multi-compartment capsule may comprise the steps of: (1) providing a primary capsule having a base, a corresponding cap and a receiving chamber; (2) providing a secondary capsule having a base, a corresponding cap and a receiving chamber; (3) introducing at least one ingredient or medicament (*e.g.*, pharmaeceutical, biotechnical, nutraceutical, vitamin, dietary supplement, mineral or combination thereof) having a first physical state (*e.g.*, solid, liquid, gas or dispersion) into at least a portion of the receiving chamber of the secondary capsule and selectively positioning the cap in sealing relationship with the base; (4) introducing at least one ingredient or medicament (*e.g.*, pharmaeceutical, biotechnical, nutraceutical, vitamin, dietary supplement, mineral or combination thereof) having a second physical state (*e.g.*, solid, liquid, gas or dispersion) into at least a portion of the receiving chamber of the primary capsule, wherein the first physical state of the ingredient(s) in the secondary capsule is different from the second physical state of the ingredient(s) in the primary capsule; and (5) introducing the secondary capsule into at least a portion of the receiving chamber of the primary capsule and selectively positioning the cap in sealing relationship with the base to form a single dosage multi-compartment capsule.

In alternate presently preferred embodiments of the present invention, a tertiary capsule comprising a base, a corresponding cap and a receiving chamber having an internal periphery sufficient for receiving one or more active ingredients or medicaments (*e.g.*, pharmaeceutical, biotechnical, nutraceutical, vitamin, dietary supplement, mineral or combination thereof) may be selectively introduced within an internal periphery of at least one receiving chamber of the secondary capsule. After the introduction of at least one active ingredient into one or more receiving chambers of a tertiary capsule pursuant to an encapsulation process of the present invention, the cap of the tertiary capsule may be selectively positioned in sealing relationship with the base and then introduced into at least a portion of the internal periphery of the secondary capsule, together with one or more active

ingredients therein. It is contemplated herein that at least two of the active ingredients introduced within the receiving chambers of the primary, secondary and tertiary capsules, respectively, comprise at least two different physical states (*e.g.*, solid, liquid, gas or dispersion).

In preferred structural design, the primary capsule may comprise a cap having a generally U-shaped configuration adapted to provide a sealing relationship when engaging the corresponding base, thereby reducing dead space volume in the internal periphery of the cap and receiving chamber of the base. A cap having a configuration adapted to generally eliminate or substantially reduce potential dead space volume of the cap and receiving chamber of the base may, accordingly, function to negate the potential for a reaction between an air bubble and one or more active ingredient(s) introduced into the base of the primary capsule.

Alternatively, a multi-compartment capsule of the present invention may include the introduction of a filling material into the cap of the primary capsule, the cap having a general cylindrical configuration adapted to provide a sealing relationship when engaging the corresponding base. An amount of filling material may be introduced into at least a portion of the internal periphery of the cap to fill, either partially or completely, the inner volume of the cap, thereby reducing the dead space volume in the cap and the internal periphery of the receiving chamber of the base. In this regard, the introduction of a filling material relative to the internal periphery of the cap may generally eliminate or substantially reduce the potential dead space volume, thus functionally negating the potential for a reaction between an air bubble and one or more active ingredient(s) introduced into the base of the primary capsule.

The primary, secondary or tertiary capsules, in accordance with the present invention, may be formed having the same or different colors. Moreover, the base and corresponding cap of a single capsule may be formed having different colors in an effort to enhance the aesthetics of the capsule to the consumer. In one presently preferred embodiment of a multi-compartment capsule of the present invention, the dosage may be banded, sealed or

easily dividable in a contact area of the primary and secondary capsules or the sealing band may be color-coded to assist in branding, if desired.

It is further contemplated herein that a multi-compartment capsule of the present invention may comprise component parts of the capsule having various time-release coatings to facilitate the release and ultimately the absorption of those active ingredients introduced into the different receiving chambers of the multi-compartment capsule to release at different release rates. In particular, a primary capsule may be formed having a conventional time-release coating that dissolves and releases the active ingredient(s) contained therein before the timed-release of the active ingredient(s) contained within a secondary capsule. Likewise, the dividing walls disposed within the internal periphery of the base of a capsule may be formed having conventional time-release coatings that dissolve and release the active ingredients within each receiving chamber defined by the dividing walls at different rates, thereby delivering the active ingredients or medicaments contained within a multi-compartment capsule at different rates. Certain active ingredients or medicaments may, therefore, be delivered at a selected interval, while other ingredients may be released at a later interval. In this way, the novel design of the multi-compartment capsules of the present invention may facilitate precision delivery of active ingredients to targeted areas of the consumer.

* * * * *

Still further, a primary object of the present invention is to provide novel delivery apparatus and methods for affecting multiple organ systems in animals or humans using a plurality of medicaments delivered by a pharmaceutical formulation comprising a multi-chambered apparatus. Accordingly, the present invention provides novel delivery apparatus and administration techniques or methods aimed at affecting multiple organ systems in an animal or human using a plurality of medicaments. A delivery apparatus may be in any multi-chambered apparatus, but preferably in a capsular formulation. Thus, a plurality of medicaments may be encapsulated and stored separately within a larger capsule until the time of ingestion, consumption, or the like. Upon consumption, the capsule walls of one or more dividing walls of a capsule may dissolve to release their contents. Different methods

of encapsulation may be used to deliver their respective contents, including but not limited to, dissolution, melting, ablation or biodegradation of the encapsulating wall. In certain embodiments and as contemplated herein, the medicaments retained in the multicompartment capsule may actually diffuse through one or more of the encapsulating walls.

* * * * *

In one embodiment of the present invention there is a multi-compartment capsule, comprising a first receiving chamber comprising at least one ingredient having a first physical state, wherein said ingredient is selected from the group consisting of a nutraceutical, a vitamin, a dietary supplement and a mineral; and a second receiving chamber comprising at least one ingredient having a second physical state, wherein said ingredient is selected from the group consisting of a nutraceutical, a vitamin, a dietary supplement and a mineral; said first physical state of said ingredient of said first receiving chamber being different from said second physical state of said ingredient of said second receiving chamber.

In another embodiment of the present invention, there is a multi-compartment capsule as defined above, further comprising a base and a corresponding cap, wherein said cap is configured to provide a sealing relationship when engaging said base.

In another embodiment of the present invention, there is a multi-compartment capsule as defined above, wherein said cap comprises a configuration adapted to reduce dead volume space within said first receiving chamber.

In another embodiment of the present invention, there is a multi-compartment capsule as defined above, further comprising a filling material introduced into said cap to reduce dead volume space within said first receiving chamber.

In another embodiment of the present invention, there is a multi-compartment capsule as defined above, wherein said filling material is selected from the group consisting of gelatin, starch, casein, chitosan, soya bean protein, safflower protein, alginates, gellan gum, carrageenan, xanthan gum, phtalated gelatin, succinated gelatin, cellulosephtalate-acetate, polyvinylacetate, hydroxypropyl methyl cellulose, oleoresin, polyvinylacetate-phtalate, polymerisates of acrylic or methacrylic esters and combinations thereof.

In another embodiment of the present invention, there is a multi-compartment capsule as defined above, wherein said first receiving chamber comprises no dead volume space.

In another embodiment of the present invention, there is a multi-compartment capsule as defined above, wherein said physical state of said ingredient in said first receiving chamber is selected from the group consisting of a solid, a liquid, a gas and a dispersion.

In another embodiment of the present invention, there is a multi-compartment capsule as defined above, wherein said physical state of said ingredient in said second receiving chamber is selected from the group consisting of a solid, a liquid, a gas and a dispersion.

In another embodiment of the present invention, there is a multi-compartment capsule as defined above, wherein said solid is selected from the group consisting of a pill, a tablet, a capsule, a powder, granulation, flakes, a troche, a suppository, an ointment, a paste, an emulsion and a cream.

In another embodiment of the present invention, there is a multi-compartment capsule as defined above, wherein said liquid is selected from the group consisting of a solution, a spirit, an elixir, a spray, a syrup and a fluid extract.

In another embodiment of the present invention, there is a multi-compartment capsule as defined above, wherein said dispersion is selected from the group consisting of an aerosol, a suspension, an emulsion, a foam, a solid foam and a gel.

In another embodiment of the present invention, there is a multi-compartment capsule as defined above, wherein said first receiving chamber comprises a time-release coating.

In another embodiment of the present invention, there is a multi-compartment capsule as defined above, wherein said second receiving chamber comprises a time-release coating.

In another embodiment of the present invention, there is a multi-compartment capsule as defined above, wherein said time-release coating of said second receiving chamber is different from said time-release coating of said primary capsule.

In another embodiment of the present invention, there is a multi-compartment capsule as defined above, further comprising a third receiving chamber comprising at least one ingredient.

In another embodiment of the present invention, there is a multi-compartment capsule as defined above, wherein said ingredient in said third receiving chamber is selected from the group consisting of a nutraceutical, a vitamin, a dietary supplement and a mineral.

In another embodiment of the present invention, there is a multi-compartment capsule as defined above, wherein said ingredient in said third receiving chamber comprises a physical state selected from the group consisting of a solid, a liquid, a gas and a dispersion.

In another embodiment of the present invention, there is a multi-compartment capsule as defined above, wherein said third receiving chamber comprises a time-release coating.

In another embodiment of the present invention, there is a multi-compartment capsule, comprising a primary capsule comprising at least one ingredient having a first physical state, wherein said ingredient is selected from the group consisting of a nutraceutical, a vitamin, a dietary supplement and a mineral; a secondary capsule comprising at least one ingredient having a second physical state, wherein said ingredient is selected from the group consisting of a nutraceutical, a vitamin, a dietary supplement and a mineral; said first physical state of said ingredient of said primary capsule being different from said second physical state of said ingredient of said secondary capsule; and said primary capsule comprising an internal periphery sufficient for receiving said ingredient and said secondary capsule therein.

In another embodiment of the present invention, there is a multi-compartment capsule as defined above, wherein said primary capsule further comprises a base and a corresponding cap, wherein said cap is configured to provide a sealing relationship when engaging said base.

In another embodiment of the present invention, there is a multi-compartment capsule as defined above, wherein said primary capsule comprises no dead volume space.

In another embodiment of the present invention, there is a multi-compartment capsule as defined above, wherein said first physical state of said ingredient in said primary capsule is selected from the group consisting of a solid, a liquid, a gas and a dispersion.

In another embodiment of the present invention, there is a multi-compartment capsule as defined above, wherein said second physical state of said ingredient in said secondary capsule is selected from the group consisting of a solid, a liquid, a gas and a dispersion.

In another embodiment of the present invention, there is a multi-compartment capsule as defined above, wherein said primary capsule comprises a time-release coating.

In another embodiment of the present invention, there is a multi-compartment capsule as defined above, wherein said secondary capsule comprises a time-release coating.

In another embodiment of the present invention, there is a multi-compartment capsule as defined above, wherein said time-release coating of said secondary capsule is different from said time-release coating of said primary capsule.

In another embodiment of the present invention, there is a multi-compartment capsule as defined above, wherein said third receiving chamber comprises a time-release coating.

In another embodiment of the present invention, there is a multi-compartment capsule as defined above, wherein said primary capsule is formed of a material selected from the group consisting of gelatin, starch, casein, chitosan, soya bean protein, safflower protein, alginates, gellan gum, carrageenan, xanthan gum, phtalated gelatin, succinated gelatin, cellulosephtalate-acetate, oleoresin, polyvinylacetate, hydroxypropyl methyl cellulose, polymerisates of acrylic or methacrylic esters, polyvinylacetate-phtalate and combinations thereof.

In another embodiment of the present invention, there is a multi-compartment capsule as defined above, wherein said primary capsule further comprises a soft elastic capsule formed of a material selected from the group consisting of glycerin and sorbitol.

In another embodiment of the present invention, there is an encapsulation process as defined above, wherein said soft elastic capsule includes an antimicrobial selected from the group consisting of paraben and sorbic acid.

In another embodiment of the present invention, there is a multi-compartment capsule as defined above, wherein said secondary capsule is formed of a material selected from the group consisting of gelatin, starch, casein, chitosan, soya bean protein, safflower protein,

alginates, gellan gum, carrageenan, xanthan gum, phtalated gelatin, succinated gelatin, cellulosephtalate-acetate, oleoresin, polyvinylacetate, hydroxypropyl methyl cellulose, polymerisates of acrylic or methacrylic esters, polyvinylacetate-phtalate and combinations thereof.

In another embodiment of the present invention, there is a multi-compartment capsule as defined above, wherein said ingredient introduced in said primary capsule comprises a moisture content in the range of about 0% to 6% by weight.

In another embodiment of the present invention, there is a multi-compartment capsule as defined above, wherein said ingredient introduced in said secondary capsule comprises a moisture content in the range of about 0% to 6% by weight.

In another embodiment of the present invention, there is a multi-compartment capsule as defined above, wherein said primary and secondary capsules contain at least one pharmaceutically acceptable lubricant in the range of about 0% to 10% by weight.

In another embodiment of the present invention, there is a multi-compartment capsule as defined above, wherein said lubricant is selected from the group consisting of aluminiumstearate, calciumstearate, magnesiumstearate, tinstearate, talc, sodium lauryl sulfate, lecithins, mineral oils, stearic acid, silicones and mixtures thereof.

In another embodiment of the present invention, there is a multi-compartment capsule as defined above, wherein said primary and secondary capsules have different colors.

In another embodiment of the present invention, there is a multi-compartment capsule as defined above, wherein said primary capsule is formed having a first color.

In another embodiment of the present invention, there is a multi-compartment capsule as defined above, wherein said secondary capsule is formed having a second color different from said first color of said primary capsule.

In another embodiment of the present invention, there is a multi-compartment capsule as defined above, wherein said capsule further comprises a base and a corresponding cap, wherein said cap is configured to provide a sealing relationship when engaging said base.

In another embodiment of the present invention, there is a multi-compartment capsule as defined above, wherein said base and said cap are formed having different colors.

In another embodiment of the present invention, there is a multi-compartment capsule as defined above, wherein said sealing relationship between said base and corresponding cap comprises no dead volume space.

In another embodiment of the present invention, there is a multi-compartment capsule as defined above, wherein said physical state of said ingredient in said first receiving chamber is selected from the group consisting of a solid, a liquid, a gas and a dispersion.

In another embodiment of the present invention, there is a multi-compartment capsule as defined above, wherein said physical state of said ingredient in said second receiving chamber capsule is selected from the group consisting of a solid, a liquid, a gas and a dispersion.

In another embodiment of the present invention, there is a multi-compartment capsule as defined above, wherein said capsule comprises a time-release coating.

In another embodiment of the present invention, there is a multi-compartment capsule as defined above, wherein said dividing wall comprises a time-release coating.

In another embodiment of the present invention, there is a multi-compartment capsule as defined above, wherein said time-release coating of said dividing wall is different from said time-release coating of said capsule.

In another embodiment of the present invention, there is a multi-compartment capsule as defined above, wherein said third receiving chamber comprises a time-release coating.

In another embodiment of the present invention, there is a multi-compartment capsule as defined above, wherein said capsule is formed of a material selected from the group consisting of gelatin, starch, casein, chitosan, soya bean protein, safflower protein, alginates, gellan gum, carrageenan, xanthan gum, phtalated gelatin, succinated gelatin, cellulosephtalate-acetate, oleoresin, polyvinylacetate, hydroxypropyl methyl cellulose, polymerisates of acrylic or methacrylic esters, polyvinylacetate-phtalate and combinations thereof.

In another embodiment of the present invention, there is a multi-compartment capsule as defined above, wherein said capsule further comprises a soft elastic capsule formed of a material selected from the group consisting of glycerin and sorbitol.

In another embodiment of the present invention, there is a multi-compartment capsule as defined above, wherein said dividing wall is formed of a material selected from the group consisting of gelatin, starch, casein, chitosan, soya bean protein, safflower protein, alginates, gellan gum, carrageenan, xanthan gum, phtalated gelatin, succinated gelatin, cellulosephtalate-acetate, oleoresin, polyvinylacetate, hydroxypropyl methyl cellulose, polymerisates of acrylic or methacrylic esters, polyvinylacetate-phtalate and combinations thereof.

In another embodiment of the present invention, there is a multi-compartment capsule as defined above, wherein said ingredient introduced in said first receiving chamber comprises a moisture content in the range of about 0% to 6% by weight.

In another embodiment of the present invention, there is a multi-compartment capsule as defined above, wherein said ingredient introduced in said second receiving chamber comprises a moisture content in the range of about 0% to 6% by weight.

In another embodiment of the present invention, there is a multi-compartment capsule as defined above, wherein said capsule contains at least one pharmaceutically acceptable lubricant in the range of about 0% to 10% by weight.

In another embodiment of the present invention there is, an encapsulation process for forming a multi-compartment capsule, said process comprising the steps of providing a primary capsule having a base and a cap; providing a secondary capsule having a base and a cap; introducing at least one ingredient having a first physical state into said secondary capsule, wherein said ingredient introduced into said primary capsule is selected from the group consisting of a nutraceutical, a vitamin, a dietary supplement and a mineral; positioning said cap of said secondary capsule in sealing relationship with said base; introducing at least one ingredient having a second physical state into said primary capsule, wherein said ingredient introduced into said primary capsule is selected from the group consisting of a nutraceutical, a vitamin, a dietary supplement and a mineral; and wherein said first physical state of said ingredient of said secondary capsule is different from said second

physical state of said ingredient of said primary capsule; introducing said secondary capsule into said base of said primary capsule; and positioning said cap of said primary capsule in sealing relationship with said base.

In another embodiment of the present invention there is, an encapsulation process as defined above, further comprising the step of reducing dead volume space within said primary capsule.

In another embodiment of the present invention, an encapsulation process as defined above, further comprising the step of introducing a filling material into said cap of said primary capsule to reduce dead volume space.

In another embodiment of the present invention, there is an encapsulation process as defined above, wherein said filling material is selected from the group consisting of gelatin, starch, casein, chitosan, soya bean protein, safflower protein, alginates, gellan gum, carrageenan, xanthan gum, phtalated gelatin, succinated gelatin, cellulosephtalate-acetate, polyvinylacetate, hydroxypropyl methyl cellulose, oleoresin, polyvinylacetate-phtalate, polymerisates of acrylic or methacrylic esters and combinations thereof.

In another embodiment of the present invention, an encapsulation process as defined above, wherein said cap of said primary capsule comprises a configuration sufficient for reducing dead volume space within the primary capsule.

In another embodiment of the present invention, there is an encapsulation process as defined above, wherein said physical state of said ingredient in said primary capsule is selected from the group consisting of a solid, a liquid, a gas and a dispersion.

In another embodiment of the present invention, there is an encapsulation process as defined above, wherein said physical state of said ingredient in said secondary capsule is selected from the group consisting of a solid, a liquid, a gas and a dispersion.

In another embodiment of the present invention, there is an encapsulation process as defined above, wherein said ingredient introduced into said primary capsule is the same as said ingredient introduced into said secondary capsule.

In another embodiment of the present invention, there is an encapsulation process as defined above, wherein said primary capsule comprises a time-release coating.

In another embodiment of the present invention, there is an encapsulation process as defined above, wherein said secondary capsule comprises a time-release coating.

In another embodiment of the present invention, there is an encapsulation process as defined above, wherein said time-release coating of said secondary capsule is different from said time-release coating of said primary capsule.

In another embodiment of the present invention, there is an encapsulation process as defined above, further comprising the steps of providing a tertiary capsule having a base and a cap; introducing at least one ingredient having a third physical state into said tertiary capsule; positioning said cap of said secondary capsule in sealing relationship with said base; and introducing said tertiary capsule into said base of said secondary capsule.

In another embodiment of the present invention, there is an encapsulation process as defined above, wherein said ingredient in said tertiary capsule is selected from the group consisting of a nutraceutical, a vitamin, a dietary supplement and a mineral.

In another embodiment of the present invention, there is an encapsulation process as defined above, wherein said ingredient in said tertiary capsule comprises a physical state selected from the group consisting of a solid, a liquid, a gas and a dispersion.

In another embodiment of the present invention, there is an encapsulation process as defined above, wherein said tertiary capsule comprises a time-release coating.

In another embodiment of the present invention, there is an encapsulation process as defined above, wherein said primary capsule is formed of a material selected from the group consisting of gelatin, starch, casein, chitosan, soya bean protein, safflower protein, alginates, gellan gum, carrageenan, xanthan gum, phtalated gelatin, succinated gelatin, cellulosephtalate-acetate, polyvinylacetate, hydroxypropyl methyl cellulose, oleoresin, polymerisates of acrylic or mthacrylic esters, polyvinylacetate-phtalate and combinations thereof.

In another embodiment of the present invention, there is an encapsulation process as defined above, wherein said primary capsule further comprises a soft elastic capsule formed of a material selected from the group consisting of glycerin and sorbitol.

In another embodiment of the present invention, there is an encapsulation process as defined above, wherein said secondary capsule is formed of a material selected from the group consisting of gelatin, starch, casein, chitosan, soya bean protein, safflower protein, alginates, gellan gum, carrageenan, xanthan gum, phtalated gelatin, succinated gelatin, cellulosephtalate-acetate, polyvinylacetate, hydroxypropyl methyl cellulose, oleoresin, polymerisates of acrylic or mthacrylic esters, polyvinylacetate-phtalate and combinations thereof.

In another embodiment of the present invention, there is an encapsulation process as defined above, wherein said secondary capsule further comprises a soft elastic capsule formed of a material selected from the group consisting of glycerin and sorbitol.

In another embodiment of the present invention, there is an encapsulation process as defined above, wherein said ingredient introduced in said primary capsule comprises a moisture content in the range of about 0% to 6% by weight.

In another embodiment of the present invention, there is a multi-compartment capsule as defined above, wherein said ingredient introduced in said secondary capsule comprises a moisture content in the range of about 0% to 6% by weight.

In another embodiment of the present invention, there is an encapsulation process as defined above, wherein said primary and secondary capsules contain at least one pharmaceutically acceptable lubricant in the range of about 0% to 10% by weight.

In another embodiment of the present invention, there is an encapsulation process as defined above, wherein said lubricant is selected from the group consisting of aluminiumstearate, calciumstearate, magnesiumstearate, tinstearate, talc, sodium lauryl sulfate, lecithins, mineral oils, stearic acid, silicones and combinations thereof.

In another embodiment of the present invention, there is an encapsulation process as defined above, wherein said primary and secondary capsules are formed having different colors.

In another embodiment of the present invention, there is an encapsulation process for forming a multi-compartment capsule, said process comprising the steps of providing a capsule comprising a cap, a base configured having a longitudinally extending body

including a length and at least one dividing wall formed along said length of said extending body, said dividing wall adapted to form a first receiving chamber and a second receiving chamber; introducing at least one ingredient having a first physical state into said second receiving chamber, wherein said ingredient introduced into said primary capsule is selected from the group consisting of a nutraceutical, a vitamin, a dietary supplement and a mineral; introducing at least one ingredient having a second physical state into said first receiving chamber, wherein said ingredient introduced into said primary capsule is selected from the group consisting of a nutraceutical, a vitamin, a dietary supplement and a mineral, and wherein said first physical state of said ingredient of said second receiving chamber being different from said second physical state of said ingredient of said first receiving chamber; and positioning said cap in sealing relationship with said base.

In another embodiment of the present invention, there is an encapsulation process as defined above, further comprising the step of reducing dead volume space within said primary capsule.

In another embodiment of the present invention, there is an encapsulation process as defined above, further comprising the step of introducing a filling material into said cap to reduce said dead volume space.

In another embodiment of the present invention, there is an encapsulation process as defined above, wherein said filling material is selected from the group consisting of gelatin, starch, casein, chitosan, soya bean protein, safflower protein, alginates, gellan gum, carrageenan, xanthan gum, phtalated gelatin, succinated gelatin, cellulosephtalate-acetate, polyvinylacetate, hydroxypropyl methyl cellulose, oleoresin, polyvinylacetate-phtalate, polymerisates of acrylic or methacrylic esters and combinations thereof.

In another embodiment of the present invention, there is an encapsulation process as defined above, wherein said cap comprises a configuration sufficient for reducing dead volume space within said capsule.

In another embodiment of the present invention, there is an encapsulation process as defined above, wherein said physical state of said ingredient in said receiving chamber is selected from the group consisting of a solid, a liquid, a gas and a dispersion.

In another embodiment of the present invention, there is an encapsulation process as defined above, wherein said physical state of said ingredient in said second receiving chamber is selected from the group consisting of a solid, a liquid, a gas and a dispersion.

In another embodiment of the present invention, there is an encapsulation process as defined above, wherein said first receiving chamber comprises a time-release coating.

In another embodiment of the present invention, there is an encapsulation process as defined above, wherein said second receiving chamber comprises a time-release coating.

In another embodiment of the present invention, there is an encapsulation process as defined above, wherein said time-release coating of said second receiving chamber is different from said time-release coating of said first receiving chamber.

In another embodiment of the present invention, there is an encapsulation process as defined above, further comprising the steps of positioning a second dividing wall along said length of said extending body, said second dividing wall adapted to form a third receiving chamber; and introducing at least one ingredient having a third physical state into said third receiving chamber.

In another embodiment of the present invention, there is an encapsulation process as defined above, wherein said ingredient in said third receiving chamber is selected from the group consisting of a nutraceutical, a vitamin, a dietary supplement and a mineral.

In another embodiment of the present invention, there is an encapsulation process as defined above, wherein said ingredient in said third receiving chamber comprises a physical state selected from the group consisting of a solid, a liquid, a gas and a dispersion.

In another embodiment of the present invention, there is an encapsulation process as defined above, wherein said dispersion is selected from the group consisting of an aerosol, a suspension, an emulsion, a foam, a solid foam and a gel.

In another embodiment of the present invention, there is an encapsulation process as defined above, wherein said third receiving chamber comprises a time-release coating.

In another embodiment of the present invention, there is an encapsulation process as defined above, wherein said capsule is formed of a material selected from the group

consisting of gelatin, starch, casein, chitosan, soya bean protein, safflower protein, alginates, gellan gum, carrageenan, xanthan gum, phtalated gelatin, succinated gelatin, cellulosephtalate-acetate, polyvinylacetate, hydroxypropyl methyl cellulose, oleoresin, polymerisates of acrylic or mthacrylic esters, polyvinylacetate-phtalate and combinations thereof.

In another embodiment of the present invention, there is an encapsulation process as defined above, wherein said capsule further comprises a soft elastic capsule formed of a material selected from the group consisting of glycerin and sorbitol.

In another embodiment of the present invention, there is an encapsulation process as defined above, wherein said primary and secondary capsules contain at least one pharmaceutically acceptable lubricant in the range of about 0% to 10% by weight.

In another embodiment of the present invention, there is an encapsulation process as defined above, wherein said lubricant is selected from the group consisting of aluminiumstearate, calciumstearate, magnesiumstearate, tinstearate, talc, sodium lauryl sulfate, lecithins, mineral oils, stearic acid, silicones and combinations thereof.

In another embodiment of the present invention, there is an encapsulation process as defined above, wherein said base and said cap of said capsule are formed having different colors.

In another embodiment of the present invention, there is an encapsulation process as defined above, further comprising the step of introducing two or more dividing walls adapted to form a plurality of receiving chambers into said base of said capsule.

In another embodiment of the present invention, there is an encapsulation process as defined above, further comprising the step of introducing a capsule into one of said plurality of receiving chambers.

In another embodiment of the present invention, there is an encapsulation process as defined above, wherein said capsule may comprise a multi-compartment capsule.

In another embodiment of the present invention, there is a multi-compartment capsule, comprising a first receiving chamber comprising at least one ingredient having a first physical state; and a second receiving chamber comprising at least one ingredient having a

second physical state, wherein said first physical state of said ingredient of said first receiving chamber being different from said second physical state of said ingredient of said second receiving chamber.

In another embodiment of the present invention, there is a multi-compartment capsule as defined above, wherein said first receiving chamber comprises no dead space.

In another embodiment of the present invention, there is a multi-compartment capsule as defined above, wherein said cap is configured to reduce dead volume space within said first receiving chamber.

In another embodiment of the present invention, there is a multi-compartment capsule as defined above, further comprising a filling material introduced into said cap to reduce dead volume space within said first receiving chamber.

In another embodiment of the present invention, there is a multi-compartment capsule as defined above, wherein said ingredient in said first receiving chamber is selected from the group consisting of a pharmaceutical, a biotechnical, a nutraceutical, a vitamin, a dietary supplement and a mineral.

In another embodiment of the present invention, there is a multi-compartment capsule as defined above, wherein said ingredient in said second receiving chamber is selected from the group consisting of a pharmaceutical, a biotechnical, a nutraceutical, a vitamin, a dietary supplement and a mineral.

In another embodiment of the present invention, there is a multi-compartment capsule as defined above, wherein said ingredient in said first receiving chamber comprises a pharmaceutical and said ingredient in said second receiving chamber comprises a pharmaceutical.

In another embodiment of the present invention, there is a multi-compartment capsule as defined above, wherein said ingredient in said first receiving chamber comprises a pharmaceutical and said ingredient in said second receiving chamber is selected from the group consisting of a biotechnical, a nutraceutical, a vitamin, a dietary supplement and a mineral.

In another embodiment of the present invention, there is a multi-compartment capsule as defined above, wherein said physical state of said ingredient in said first receiving chamber is selected from the group consisting of a solid, a liquid, a gas and a dispersion.

In another embodiment of the present invention, there is a multi-compartment capsule as defined above, wherein said physical state of said ingredient in said second receiving chamber is selected from the group consisting of a solid, a liquid, a gas and a dispersion.

In another embodiment of the present invention, there is a multi-compartment capsule as defined above, wherein said time-release coating of said second receiving chamber is different from said time-release coating of said primary capsule.

In another embodiment of the present invention, there is a multi-compartment capsule, comprising a primary capsule comprising at least one ingredient having a first physical state; a secondary capsule comprising at least one ingredient having a second physical state; said first physical state of said ingredient of said primary capsule being different from said second physical state of said ingredient of said secondary capsule; and said primary capsule comprising an internal periphery sufficient for receiving said ingredient and said secondary capsule therein.

In another embodiment of the present invention, there is a multi-compartment capsule as defined above, wherein said primary capsule further comprises a base and a corresponding cap, wherein said cap is configured to provide a sealing relationship when engaging said base.

In another embodiment of the present invention, there is a multi-compartment capsule as defined above, wherein said primary capsule comprises no dead volume space.

In another embodiment of the present invention, there is a multi-compartment capsule as defined above, wherein said ingredient in said primary capsule is selected from the group consisting of a pharmaceutical, a biotechnical, a nutraceutical, a vitamin, a dietary supplement and a mineral.

In another embodiment of the present invention, there is a multi-compartment capsule as defined above, wherein said ingredient in said secondary capsule is selected from the

group consisting of a pharmaceutical, a biotechnical, a nutraceutical, a vitamin, a dietary supplement and a mineral.

In another embodiment of the present invention, there is a multi-compartment capsule as defined above, wherein said ingredient in said first receiving chamber comprises a pharmaceutical and said ingredient in said second receiving chamber comprises a pharmaceutical.

In another embodiment of the present invention, there is a multi-compartment capsule as defined above, wherein said ingredient introduced in said primary capsule comprises a moisture content in the range of about 0% to 6% by weight.

In another embodiment of the present invention, there is a multi-compartment capsule as defined above, wherein said ingredient introduced in said secondary capsule comprises a moisture content in the range of about 0% to 6% by weight.

In another embodiment of the present invention, there is a multi-compartment capsule as defined above, wherein said primary and secondary capsules contain at least one pharmaceutically acceptable lubricant in the range of about 0% to 10% by weight.

In another embodiment of the present invention, there is a multi-compartment capsule as defined above, wherein said lubricant is selected from the group consisting of aluminiumstearate, calciumstearate, magnesiumstearate, tinstearate, talc, sodium lauryl sulfate, lecithins, mineral oils, stearic acid, silicones and mixtures thereof.

In another embodiment of the present invention, there is a multi-compartment capsule as defined above, wherein said primary and secondary capsules have different colors.

In another embodiment of the present invention, there is a multi-compartment capsule as defined above, wherein said primary capsule is formed having a first color.

In another embodiment of the present invention, there is a multi-compartment capsule as defined above, wherein said secondary capsule is formed having a second color different from said first color of said primary capsule.

In another embodiment of the present invention, there is a multi-compartment capsule, comprising a capsule comprising a longitudinally extending body having a length; at

least one dividing wall formed along said length of said extending body, said dividing wall forming a first receiving chamber and a second receiving chamber; said first receiving chamber comprising at least one ingredient having a first physical state; said second receiving chamber comprising at least one ingredient having a second physical state; and said first physical state of said ingredient of said first receiving chamber being different from said second physical state of said ingredient of said second receiving chamber.

In another embodiment of the present invention, there is a multi-compartment capsule as defined above, wherein said capsule further comprises a base and a corresponding cap, wherein said cap is configured to provide a sealing relationship when engaging said base.

In another embodiment of the present invention, there is a multi-compartment capsule as defined above, wherein said base and said cap are formed having different colors.

In another embodiment of the present invention, there is a multi-compartment capsule as defined above, wherein said sealing relationship between said base and corresponding cap comprises no dead volume space within said capsule.

In another embodiment of the present invention, there is a multi-compartment capsule as defined above, wherein said ingredient in said first receiving chamber comprises a pharmaceutical and said ingredient in said second receiving chamber comprises a pharmaceutical.

In another embodiment of the present invention, there is a multi-compartment capsule as defined above, wherein said ingredient in said first receiving chamber comprises a pharmaceutical and said ingredient in said second receiving chamber is selected from the group consisting of a biotechnical, a nutraceutical, a vitamin, a dietary supplement and a mineral.

In another embodiment of the present invention, there is a multi-compartment capsule as defined above, wherein said first physical state of said ingredient in said first receiving chamber is selected from the group consisting of a solid, a liquid, a gas and a dispersion.

In another embodiment of the present invention, there is a multi-compartment capsule as defined above, wherein said second physical state of said ingredient in said second

receiving chamber capsule is selected from the group consisting of a solid, a liquid, a gas and a dispersion.

In another embodiment of the present invention, there is a multi-compartment capsule as defined above, wherein said capsule comprises a time-release coating.

In another embodiment of the present invention, there is a multi-compartment capsule as defined in above, wherein said capsule is formed of a material selected from the group consisting of gelatin, starch, casein, chitosan, soya bean protein, safflower protein, alginates, gellan gum, carrageenan, xanthan gum, phtalated gelatin, succinated gelatin, cellulosephtalate-acetate, polyvinylacetate, hydroxypropyl methyl cellulose, oleoresin, polymerisates of acrylic or methacrylic esters, polyvinylacetate-phtalate and mixtures thereof.

In another embodiment of the present invention, there is a multi-compartment capsule as defined above, wherein said capsule further comprises a soft elastic capsule formed of a material selected from the group consisting of glycerin and sorbitol.

In another embodiment of the present invention, there is a multi-compartment capsule as defined above, wherein said lubricant is selected from the group consisting of aluminiumstearate, calciumstearate, magnesiumstearate, tinstearate, talc, sodium lauryl sulfate, lecithins, mineral oils, stearic acid, silicones and mixtures thereof.

In another embodiment of the present invention, there is an encapsulation process for forming a multi-compartment capsule, said process comprising the steps of providing a primary capsule having a base and a cap; providing a secondary capsule having a base and a cap; introducing at least one ingredient having a first physical state into said secondary capsule; positioning said cap of said secondary capsule in sealing relationship with said base; introducing at least one ingredient having a second physical state into said primary capsule, wherein said first physical state of said ingredient of said secondary capsule is different from said second physical state of said ingredient of said primary capsule; introducing said secondary capsule into said base of said primary capsule; and positioning said cap of said primary capsule in sealing relationship with said base.

In another embodiment of the present invention, there is an encapsulation process as defined above, further comprising the step of reducing dead volume space within said primary capsule.

In another embodiment of the present invention, there is an encapsulation process as defined above, further comprising the step of introducing a filling material into said cap of said primary capsule to reduce dead volume space.

In another embodiment of the present invention, there is an encapsulation process as defined above, wherein said cap of said primary capsule comprises a configuration sufficient for reducing dead volume space within the primary capsule.

In another embodiment of the present invention, there is an encapsulation process as defined above, wherein said ingredient introduced into said primary capsule is selected from the group consisting of a pharmaceutical, a biotechnical, a nutraceutical, a vitamin, a dietary supplement and a mineral.

In another embodiment of the present invention, there is an encapsulation process as defined above, wherein said physical state of said ingredient in said primary capsule is selected from the group consisting of a solid, a liquid, a gas and a dispersion.

In another embodiment of the present invention, there is an encapsulation process as defined above, wherein said ingredient in said secondary capsule is selected from the group consisting of a pharmaceutical, a biotechnical, a nutraceutical, a vitamin, a dietary supplement and a mineral.

In another embodiment of the present invention, there is an encapsulation process as defined above, wherein said physical state of said ingredient in said secondary capsule is selected from the group consisting of a solid, a liquid, a gas and a dispersion.

In another embodiment of the present invention, there is an encapsulation process as defined above, wherein said ingredient in said primary capsule comprises a pharmaceutical and said ingredient in said secondary capsule is selected from the group consisting of a pharmaceutical.

In another embodiment of the present invention, there is an encapsulation process as defined above, wherein said ingredient in said primary capsule comprises a pharmaceutical and said ingredient in said secondary capsule is selected from the group consisting of a biotechnical, a nutraceutical, a vitamin, a dietary supplement and a mineral.

In another embodiment of the present invention, there is an encapsulation process as defined above, wherein said ingredient introduced into said primary capsule is the same as said ingredient introduced into said secondary capsule.

In another embodiment of the present invention, there is an encapsulation process as defined above, wherein said time-release coating of said secondary capsule is different from said time-release coating of said primary capsule.

In another embodiment of the present invention, there is an encapsulation process as defined above, further comprising the steps of providing a tertiary capsule having a base and a cap; introducing at least one ingredient having a third physical state into said tertiary capsule; positioning said cap of said secondary capsule in sealing relationship with said base; and introducing said tertiary capsule into said base of said secondary capsule.

In another embodiment of the present invention, there is an encapsulation process as defined above, wherein said ingredient in said tertiary capsule is selected from the group consisting of a pharmaceutical, a biotechnical, a nutraceutical, a vitamin, a dietary supplement and a mineral.

In another embodiment of the present invention, there is an encapsulation process as defined above, wherein said ingredient in said tertiary capsule comprises a physical state selected from the group consisting of a solid, a liquid, a gas and a dispersion.

In another embodiment of the present invention, there is an encapsulation process as defined above, wherein said tertiary capsule comprises a time-release coating.

In another embodiment of the present invention, there is an encapsulation process as defined above, wherein said lubricant is selected from the group consisting of aluminiumstearate, calciumstearate, magnesiumstearate, tinstearate, talc, sodium lauryl sulfate, lecithins, mineral oils, stearic acid, silicones and combinations thereof.

In another embodiment of the present invention, there is an encapsulation process as defined above, wherein said primary and secondary capsules are formed having different colors.

In another embodiment of the present invention, there is an encapsulation process for forming a multi-compartment capsule, said process comprising the steps of providing a

capsule comprising a cap, a base configured having a longitudinally extending body including a length and at least one dividing wall formed along said length of said extending body, said dividing wall adapted to form a first receiving chamber and a second receiving chamber; introducing at least one ingredient having a first physical state into said second receiving chamber; introducing at least one ingredient having a second physical state into said first receiving chamber, wherein said first physical state of said ingredient of said second receiving chamber being different from said second physical state of said ingredient of said first receiving chamber; and positioning said cap in sealing relationship with said base.

In another embodiment of the present invention, there is an encapsulation process as defined above, further comprising the step of reducing dead volume space within said primary capsule.

In another embodiment of the present invention, there is an encapsulation process as defined above, wherein said filling material is selected from the group consisting of gelatin, starch, casein, chitosan, soya bean protein, safflower protein, alginates, gellan gum, carrageenan, xanthan gum, phtalated gelatin, succinated gelatin, cellulosephtalate-acetate, polyvinylacetate, hydroxypropyl methyl cellulose, polyvinylacetate-phtalate, polymerisates of acrylic or methacrylic esters and combinations thereof.

In another embodiment of the present invention, there is an encapsulation process as defined above, wherein said cap comprises a configuration sufficient for reducing dead volume space within said capsule.

In another embodiment of the present invention, there is an encapsulation process as defined above, wherein said ingredient in said first receiving chamber is selected from the group consisting of a pharmaceutical, a biotechnical, a nutraceutical, a vitamin, a dietary supplement and a mineral.

In another embodiment of the present invention, there is an encapsulation process as defined above, wherein said physical state of said ingredient in said receiving chamber is selected from the group consisting of a solid, a liquid, a gas and a dispersion.

In another embodiment of the present invention, there is an encapsulation process as defined above, wherein said ingredient in said second receiving chamber is selected from the

group consisting of a pharmaceutical, a biotechnical, a nutraceutical, a vitamin, a dietary supplement and a mineral.

In another embodiment of the present invention, there is an encapsulation process as defined above, wherein said physical state of said ingredient in said second receiving chamber is selected from the group consisting of a solid, a liquid, a gas and a dispersion.

In another embodiment of the present invention, there is an encapsulation process as defined above, wherein said ingredient in said first receiving chamber comprises a pharmaceutical and said ingredient in said second receiving chamber is selected from the group consisting of a pharmaceutical.

In another embodiment of the present invention, there is an encapsulation process as defined above, wherein said time-release coating of said second receiving chamber is different from said time-release coating of said first receiving chamber.

In another embodiment of the present invention, there is an encapsulation process as defined above, further comprising the steps of positioning a second dividing wall along said length of said extending body of said base, said second dividing wall adapted to form a third receiving chamber; and introducing at least one ingredient having a physical state into said third receiving chamber.

In another embodiment of the present invention, there is an encapsulation process as defined above, wherein said ingredient introduced into said third receiving chamber is selected from the group consisting of a pharmaceutical, a biotechnical, a nutraceutical, a vitamin, a dietary supplement and a mineral.

In another embodiment of the present invention, there is an encapsulation process as defined above, wherein said physical state of said ingredient introduced into said third receiving chamber is selected from the group consisting of a solid, a liquid, a gas and a dispersion.

In another embodiment of the present invention, there is an encapsulation process as defined above, wherein said second dividing wall comprises a time-release coating.

In another embodiment of the present invention, there is an encapsulation process as defined above, wherein said capsule further comprises a soft elastic capsule formed of a material selected from the group consisting of glycerin and sorbitol.

In another embodiment of the present invention, there is an encapsulation process as defined above, wherein said lubricant is selected from the group consisting of aluminiumstearate, calciumstearate, magnesiumstearate, tinstearate, talc, sodium lauryl sulfate, lecithins, mineral oils, stearic acid, silicones and combinations thereof.

In another embodiment of the present invention, there is an encapsulation process as defined above, wherein said base and said cap of said capsule are formed having different colors.

BRIEF DESCRIPTION OF THE DRAWINGS

The foregoing and other objects and features of the present invention will become more fully apparent from the following description and appended claims, taken in conjunction with the accompanying drawings. Understanding that these drawings depict only typical embodiments of the invention and are, therefore, not to be considered limiting of its scope, the invention will be described with additional specificity and detail through use of the accompanying drawings in which:

Figure 1 is a flow diagram illustrating one presently preferred embodiment of a process of the present invention comprising the steps of introducing at least one active ingredient or medicament having a solid physical state into a secondary capsule and introducing the secondary capsule into a primary capsule further including at least one active ingredient or medicament having a liquid physical state;

Figure 2 is a cross-sectional view illustrating another presently preferred embodiment of a multi-compartment capsule of the present invention wherein a primary capsule houses a secondary capsule and a secondary capsule houses a tertiary capsule, wherein each of the capsules include one or more active ingredients or medicaments and the active ingredient(s) introduced into at least two of the capsules comprise different physical states;

Figure 3 is a perspective view illustrating yet another presently preferred embodiment of a multi-compartment capsule comprising a base, a cap and a dividing wall positioned between the base and the cap, wherein the dividing wall facilitates the formation of at least two, independent receiving chambers for receiving one or more active ingredients or medicaments having different physical states;

Figure 4 is a cross-sectional view of the multi-compartment capsule shown in Figure 3 wherein the base, the dividing wall defining the two receiving chambers and the cap are assembled to form a capsule of the present invention and wherein one or more active ingredients or medicaments having different physical states are introduced into the receiving chambers;

Figure 5 is a perspective view illustrating an alternate presently preferred embodiment of a multi-compartment capsule of the present invention having a primary capsule comprising a capsular base configured with a longitudinally extending body, a corresponding cap and a series of dividing walls disposed in spaced apart relationship along the length of the longitudinally extending body of the base, wherein the dividing walls define a plurality of independent receiving chambers having an internal periphery sufficient for introducing one or more active ingredients or medicaments having different physical states therein and for introducing a secondary capsule, having one or more active ingredients contained therein, within at least one of said receiving chambers;

Figure 6 is a cross-sectional view of the multi-compartment capsule shown in Figure 5 wherein the base and the cap are assembled to form a single dosage capsule having a series of dividing walls that define a plurality of chambers for receiving one or more active ingredients or medicaments, wherein the active ingredient(s) in at least two of the receiving chambers comprise different physical states;

Figure 7 is a perspective view illustrating yet another presently preferred embodiment of a multi-compartment capsule of the present invention having a primary capsule comprising a capsular base configured with a longitudinally extending body, a corresponding cap and a series of dividing walls disposed in spaced apart relationship, both vertically and horizontally,

along the length of the longitudinally extending body of the base, wherein the dividing walls define a plurality of independent receiving chambers having an internal periphery sufficient for introducing one or more active ingredients or medicaments having different physical states therein;

Figure 8 is a perspective view illustrating an alternate preferred embodiment of the multi-compartment capsule shown in Figure 7, wherein the multi-compartment capsule includes a primary capsule comprising a capsular base configured with a longitudinally extending body, a corresponding cap and a series of dividing walls disposed in spaced apart relationship, both vertically and horizontally, along the length of the longitudinally extending body of the base, wherein the dividing walls define a plurality of independent receiving chambers having an internal periphery sufficient for introducing one or more active ingredients or medicaments having different physical states therein and for introducing a secondary capsule, having one or more active ingredients contained therein, within at least one of said receiving chambers;

Figure 9 is a perspective view illustrating yet another presently preferred embodiment of a multi-compartment capsule of the present invention wherein the multi-compartment capsule shown in Figure 7 is introduced within the internal periphery of a receiving chamber of a primary capsule having one or more active ingredients also contained therein;

Figure 10 is a cross-sectional view illustrating a presently preferred embodiment of a multi-compartment capsule of the present invention including a secondary capsule having one or more active ingredients or medicaments selectively introduced into the internal periphery of a primary capsule having one or more active ingredients or medicaments, wherein the active ingredient(s) introduced into the primary capsule comprises a physical state (*e.g.*, solid, liquid, gas or dispersion) which differs from the physical state of the active ingredient(s) introduced into the internal periphery of the secondary capsule, the primary capsule further comprising a cap having a generally U-shaped configuration adapted to provide a sealing relationship when engaging the corresponding base, thereby reducing dead space volume in the internal periphery of the receiving chamber of the base;

Figure 11 is a perspective view illustrating yet another presently preferred embodiment of a multi-compartment capsule of the present invention including a secondary capsule having one or more active ingredients or medicaments and having a size and shape sufficient for being selectively introduced into the internal periphery of a primary capsule having one or more active ingredients or medicaments, wherein the active ingredient(s) introduced into the primary capsule comprises a physical state (*e.g.*, solid, liquid, gas or dispersion) which differs from the physical state of the active ingredient(s) introduced into the internal periphery of the secondary capsule, the primary capsule further comprising a filling material introduced into the internal periphery of the cap having a general conical configuration and adapted to provide a sealing relationship when engaging the corresponding base, thereby reducing dead space volume in the internal periphery of the receiving chamber of the base;

Figure 12 is a cross-sectional view of the multi-compartment capsule shown in Figure 11 wherein a sufficient amount of filling material is introduced into the internal periphery of the cap, thereby functioning to eliminate or significantly reduce the dead space volume in the receiving chamber of the primary capsule; and

Figure 13 is a cross-sectional view illustrating an alternate presently preferred embodiment of a multi-compartment capsule of the present invention comprising a tertiary capsule having one or more active ingredients or medicaments and having a size a shape sufficient for being introduced into at least a portion of the internal periphery of the receiving chamber of a secondary capsule having one or more active ingredients or medicaments also introduced therein, the size and shape of the secondary capsule sufficient for being selectively introduced into the internal periphery of a primary capsule having one or more active ingredients or medicaments, wherein the active ingredient(s) introduced into the primary capsule comprises a physical state (*e.g.*, solid, liquid, gas or dispersion) which differs from the physical state of the active ingredient(s) introduced into the receiving chambers of the secondary and tertiary capsules, the primary capsule further comprising a filling material introduced into the internal periphery of the cap having a general conical configuration and

adapted to provide a sealing relationship when engaging the corresponding base, thereby reducing dead space volume in the internal periphery of the receiving chamber of the base of the primary capsule.

DETAILED DESCRIPTION OF THE PREFERRED EMBODIMENTS

It will be readily understood that the components of the present invention, as generally described and illustrated in the Figures herein, could be arranged and designed in a wide variety of different configurations and process steps. Those of ordinary skill in the art will, of course, appreciate that various modifications to the details herein may easily be made without departing from the essential characteristics of the invention, as described. Thus, the following more detailed description of the embodiments of apparatus and methods of the present invention, as represented in Figures 1 through 13, is not intended to limit the scope of the invention, as claimed, but it is merely representative of the presently preferred embodiments of the invention.

The presently preferred embodiments of the invention will be best understood by reference to the drawings, wherein like parts are designated by like numerals throughout.

One presently preferred embodiment of the present invention, designated generally at 10, is best illustrated in Figure 1. As shown, a multi-compartment capsule 10 is illustrated comprising a primary capsule 11 and a secondary capsule 20 selectively introduced within at least a portion of an internal periphery of the primary capsule. The secondary capsule 20 includes a base 24, a corresponding cap 22 and a receiving chamber 28 formed between the base and cap. The receiving chamber 28 is configured having an internal periphery sufficient for receiving at least one active ingredient or medicament (*e.g.*, pharmaceutical, biotechnical, nutraceutical, vitamin, dietary supplement, mineral or combination thereof) therein. In similar structural design, the primary capsule 11 may be formed having a base 14, a corresponding cap 12 and a receiving chamber 18 formed between the base and cap. The receiving chamber 18 of the primary capsule 11 is preferably formed having an internal periphery sufficient for receiving the secondary capsule 20, together with at least one active

ingredient or medicament (*e.g.*, pharmaeceutical, biotechnical, nutraceutical, vitamin, dietary supplement, mineral or combination thereof) therein.

Still referring to Figure 1, one presently preferred embodiment of an encapsulation process for forming a multi-compartment capsule 10 is comprising the steps of: (1) providing a primary capsule 11 having a base 14, a corresponding cap 12 and a receiving chamber 18; (2) providing a secondary capsule 20 having a base 24, a corresponding cap 22 and a receiving chamber 28; (3) introducing at least one ingredient or medicament (*e.g.*, pharmaeceutical, biotechnical, nutraceutical, vitamin, dietary supplement, mineral or combination thereof) having a first physical state (*e.g.*, solid, liquid, gas or dispersion) into at least a portion of the receiving chamber 28 of the secondary capsule 20 and selectively positioning the cap 22 in sealing relationship with the base 24; (4) introducing at least one ingredient or medicament (*e.g.*, pharmaeceutical, biotechnical, nutraceutical, vitamin, dietary supplement, mineral or combination thereof) having a second physical state (*e.g.*, solid, liquid, gas or dispersion) into at least a portion of the receiving chamber 18 of the primary capsule 11, wherein the first physical state of the ingredient(s) in the secondary capsule is different from the second physical state of the ingredient(s) in the primary capsule; and (5) introducing the secondary capsule 20 into at least a portion of the receiving chamber 18 of the primary capsule 11 and selectively positioning the cap 12 in sealing relationship with the base 14 to form a single dosage multi-compartment capsule.

As shown, a solid is selectively introduced within at least a portion of the internal periphery of the receiving chamber 28 of the secondary capsule 20 and a liquid is selectively introduced within at least a portion of the internal periphery of the receiving chamber 18 of the primary capsule 11. Although the ingredient(s) introduced into the receiving chamber 18 of the primary capsule 11 may be the same or different from the ingredient(s) introduced into the receiving chamber 28 of the secondary capsule, the active ingredient(s) in the primary capsule 11 have a physical state (*i.e.*, solid, liquid, gas or dispersion) that varies from the physical state of the active ingredient(s) in the secondary capsule 20. Accordingly, those skilled in the art will readily recognize other possible modifications and adaptations relative

to the contemplated variations in physical states of the active ingredient(s) selectively positionable within the receiving chambers 18, 28 of the primary and secondary capsules, respectively, which are consistent with the spirit and scope of the present invention. It is intended, therefore, that the figures and examples provided herein be viewed as exemplary of the principles of the present invention, and not as restrictive to a particular structure or method for implementing those principles.

Referring now to Figure 2, an alternate presently preferred embodiment of a multi-compartment capsule 110 is shown comprising a primary capsule 111, a secondary capsule 120 and a tertiary capsule 130. The tertiary capsule 130 includes a base 134, a corresponding cap 132 and a receiving chamber 138 formed between the base and cap. The receiving chamber 138 is preferably formed having an internal periphery sufficient for receiving at least one active ingredient or medicament (*e.g.*, pharmaeceutical, biotechnical, nutraceutical, vitamin, dietary supplement, mineral or combination thereof). Structurally, the tertiary capsule 130 is configured having a size sufficient for being selectively introduced within at least a portion of an internal periphery of a receiving chamber 128 defined between a base 124 and a corresponding cap 122 of the secondary capsule 120. One or more active ingredients or medicaments (*e.g.*, pharmaeceutical, biotechnical, nutraceutical, vitamin, dietary supplement, mineral or combination thereof) may be introduced into at least a portion of the receiving chamber 128 of the secondary capsule 120, together with the introduction of the tertiary capsule 130 comprising its active ingredient(s). The secondary capsule 120 having its active ingredient(s) and housing the tertiary capsule 130 with its active ingredient(s) may then be selectively introduced within at least a portion of an internal periphery of a receiving chamber 118 of the primary capsule 111 defined between a base 124 and a corresponding cap 122. Preferably, the receiving chamber 118 of the primary capsule 111 may also include one or more active ingredients or medicaments (*e.g.*, pharmaeceutical, biotechnical, nutraceutical, vitamin, dietary supplement, mineral or combination thereof) introduced therein.

Still referring to Figure 2, another presently preferred embodiment of an encapsulation process for forming a multi-compartment capsule 110 may comprise the steps of: (1) providing a primary capsule 111 having a base 114, a corresponding cap 112 and a receiving chamber 118 defined between the base and cap; (2) providing a secondary capsule 120 having a base 124, a corresponding cap 122 and a receiving chamber 128 defined between the base and cap; (3) providing a tertiary capsule 130 having a base 134, a corresponding cap 132 and a receiving chamber 138 defined between the base and cap; (4) introducing at least one ingredient (*e.g.*, pharmaeceutical, biotechnical, nutraceutical, vitamin, dietary supplement, mineral or combination thereof) having a first physical state (*e.g.*, solid, liquid, gas or dispersion) into at least a portion of the receiving chamber 138 of the tertiary capsule 130 and selectively positioning the cap 132 in sealing relationship with the base 134; (5) introducing at least one ingredient (*e.g.*, pharmaeceutical, biotechnical, nutraceutical, vitamin, dietary supplement, mineral or combination thereof) having a second physical state (*e.g.*, solid, liquid, gas or dispersion) into at least a portion of the receiving chamber 128 of the secondary capsule 120, wherein the first physical state of the ingredient(s) in the tertiary capsule 130 are the same as the second physical state of the ingredient(s) in the secondary capsule 120; (6) introducing the tertiary capsule 130 into at least a portion of the receiving chamber 218 of the secondary capsule 120 and selectively positioning the cap 122 in sealing relationship with the base 124; (7) introducing at least one ingredient (*e.g.*, pharmaeceutical, biotechnical, nutraceutical, vitamin, dietary supplement, mineral or combination thereof) having a third physical state (*e.g.*, solid, liquid, gas or dispersion) into at least a portion of the receiving chamber 118 of the primary capsule 111, wherein the third physical state of the ingredient(s) in the primary capsule are different from the first and second physical states of the ingredient(s) in the tertiary capsule 130 and the secondary capsule 120, respectively; and (8) introducing the secondary capsule 120 into at least a portion of the receiving chamber 118 of the primary capsule 111 and selectively positioning the cap 112 in sealing relationship with the base 114 to form a single dosage multi-compartment capsule.

In the presently preferred embodiment illustrated in Figure 2, a liquid may be selectively introduced into at least a portion of the internal periphery of the receiving chamber 118 of the primary capsule 111, a solid may be selectively introduced into at least a portion of the internal periphery of the receiving chamber 128 of the secondary capsule 120 and a solid may be selectively introduced into at least a portion of the receiving chamber 138 of the tertiary capsule 130. Although the ingredient(s) selectively introduced into the receiving chambers 118, 128, 138 of the primary, secondary and tertiary capsules 111, 120, 130, respectively, may be the same or different, the active ingredient(s) in at least two of the receiving chambers comprise at least two different physical states (*e.g.*, solid, liquid, gas or dispersion). It is further contemplated herein as an alternate embodiment that the active ingredient(s) introduced in the receiving chamber 118 of the primary capsule 111 comprises a physical state (*e.g.*, solid, liquid, gas or dispersion) different from the physical state of the active ingredient(s) contained within the receiving chamber 128 of the secondary capsule 120 which is different from the physical state of the active ingredient(s) contained within the receiving chamber 138 of the tertiary capsule 130. Those skilled in the art will readily recognize other possible modifications and adaptations relative to contemplated variations in physical states of the active ingredient(s) selectively introduced within the receiving chambers 118, 128, 138 of the primary, secondary and tertiary capsules, respectively, which are consistent with the spirit and scope of the present invention. It is intended, therefore, that the figures and examples provided herein be viewed as exemplary of the principles of the present invention, and not as restrictive to a particular structure or method for implementing those principles.

Referring now to Figures 3 and 4, another presently preferred embodiment of a multi-compartment capsule 210 is shown comprising a base 214, a corresponding cap 212 and a dividing wall 216 positionable between the base and the cap. Structurally, the size, shape and positioning of the dividing wall 216 relative to the base 214 and corresponding cap 212 facilitates the formation of at least two, independent and separate receiving chambers 218a, 218b, each having an internal periphery sufficient for receiving one or more active

ingredients or medicaments (*e.g.*, pharmaeceutical, biotechnical, nutraceutical, vitamin, dietary supplement, mineral or combination thereof) therein. As best shown in Figure 4, the dividing wall 216 seats within the internal periphery of both the base 214 and the corresponding cap 212. After introducing one or more active ingredients or medicaments into receiving chamber 218b and disposing the dividing wall 216 relative thereto, one or more active ingredients or medicaments (*e.g.*, pharmaeceutical, biotechnical, nutraceutical, vitamin, dietary supplement, mineral or combination thereof) may be introduced into receiving chamber 218a and the cap may be selectively positioned in sealing relationship with the base 214 to form one presently preferred embodiment of the single, dosage multi-compartment capsule 210. Moreover, the dividing wall 216 may functionally assist in forming a sealing relationship between the base 214 and corresponding cap 212 of the multi-compartment capsule 210, if desired.

In one presently preferred embodiment of the multi-compartment capsule 211 of the present invention, a solid may be selectively introduced into at least a portion of the internal periphery of the receiving chamber 218a and a liquid may be selectively introduced into at least a portion of the internal periphery of the receiving chamber 218b. Although the ingredient(s) introduced into the receiving chamber 218a may be the same or different from the ingredient(s) introduced into the receiving chamber 218, the active ingredient(s) in the first receiving chamber 218a preferably comprise a physical state (*e.g.*, solid, liquid, gas or dispersion) that is different from the physical state of the active ingredient(s) in the second receiving chamber 218b. Those skilled in the art will readily recognize other possible modifications and adaptations relative to the contemplated variations in physical states (*e.g.*, solid, liquid, gas and dispersion) of the active ingredient(s) selectively positionable within the receiving chambers 218a, 218b which are consistent with the spirit and scope of the present invention. It is intended, therefore, that the figures and examples provided herein be viewed as exemplary of the principles of the present invention, and not as restrictive to a particular structure or method for implementing those principles.

Referring now to Figures 5 and 6, another presently preferred embodiment of a multi-compartment capsule, designated as 310, is shown including a primary capsule 311 comprising a capsular base 314 configured having an elongated or longitudinally extending body, a corresponding cap 312 and a plurality of dividing walls 316 selectively disposed along the length of the longitudinally extending body of the base. Preferably, the structural size, shape and positioning of the dividing walls 316a, 316b, 316c along the length of the elongated body of the base 314 facilitate the formation of a plurality of independent receiving chambers 318a, 318b, 318c, 318d. Each receiving chamber 318a, 318b, 318c, 318d of the primary capsule 311 having an internal periphery sufficient for receiving one or more active ingredients or medicaments (*e.g.*, pharmaeceutical, biotechnical, nutraceutical, vitamin, dietary supplement, mineral or combination thereof) therein.

As best shown in Figure 6, the dividing walls 316a, 316b, 316c are preferably seated within the internal periphery of the base 314 of the primary capsule 311 and in a spaced apart relationship along the length of the longitudinally extending body and form four independent receiving chambers 318a, 318b, 318c, 318d. In one presently preferred embodiment of the multi-compartment capsule 310 of the present invention, each of the receiving chambers 318a, 318b, 318c comprises at least one active ingredient or medicament having a physical state (*e.g.*, solid, liquid, gas or dispersion) different from the physical state of the ingredient(s) in the other receiving chambers.

As illustrated by way of example, and not by way of restriction, a solid may be selectively introduced into at least a portion of the internal periphery of the receiving chamber 318a, a dispersion may be selectively introduced into at least a portion of the internal periphery of the receiving chamber 318b, a liquid may be selectively introduced into at least a portion of the internal periphery of the receiving chamber 318c and a secondary capsule 320 may be selectively introduced into at least a portion of the internal periphery of the receiving chamber 318d. As contemplated herein, receiving chamber 318d may be further configured having an internal periphery sufficient for receiving a secondary capsule 320, together with at least one active ingredient or medicament therein.

One presently preferred embodiment of an encapsulation process, as defined by the structural configuration of the multi-compartment capsule 310 illustrated in Figures 5 and 6, may comprise the steps of: (1) introducing a secondary capsule 320 (*e.g.*, tablet) and one or more active ingredients or medicaments into receiving chamber 318d; (2) selectively positioning dividing wall 316c along the length of the elongated body of the base 314; (3) introducing one or more active ingredients or medicaments (*e.g.*, pharmaeceutical, biotechnical, nutraceutical, vitamin, dietary supplement, mineral or combination thereof) into receiving chamber 318c; (4) selectively positioning dividing wall 316b along the length of the elongated body of the base 314 in a spaced apart relationship to dividing wall 316c; (5) introducing one or more active ingredients or medicaments (*e.g.*, pharmaeceutical, biotechnical, nutraceutical, vitamin, dietary supplement, mineral or combination thereof) into receiving chamber 318b; (6) selectively positioning dividing wall 316a along the length of the elongated body of the base 314 in a spaced apart relationship to dividing wall 316b; and (7) selectively positioning the cap 312 in sealing relationship with the base 314 to form a presently preferred embodiment of a single, dosage multi-compartment capsule 310. The dividing wall 316a may also function in the formation of the sealing relationship between the base 314 and the corresponding cap 312, if desired.

Although the ingredient(s) introduced into one of the receiving chambers 318 may be the same ingredient or may be different from the ingredient(s) introduced into the other receiving chambers, the active ingredient(s) in at least two of the receiving chambers 318 preferably comprise a physical state (*e.g.*, solid, liquid, gas or dispersion) that is different from the physical state of the active ingredient(s) in one or more of the remaining receiving chambers. Those skilled in the art will readily recognize other possible modifications and adaptations relative to the contemplated variations in physical states (*e.g.*, solid, liquid, gas and dispersion) of the active ingredient(s) selectively introduced within the receiving chambers 318 which are consistent with the spirit and scope of the present invention. It is intended, therefore, that the figures and examples provided herein be viewed as exemplary of

the principles of the present invention, and not as restrictive to a particular structure or method for implementing those principles.

Another presently preferred embodiment of a multi-compartment capsule of the present invention, generally designated as 410 in Figure 7, is shown comprising a capsular base 414 preferably configured having an elongated or longitudinally extending body, a corresponding cap 412 and a plurality of dividing walls 416 selectively disposed along the length of the longitudinally extending body of the base, both horizontally and vertically. In structural design, the size, shape and positioning of the dividing walls 416a, 416b, 416c, 416d, 416e along the length of the longitudinally extending body of the base 414 facilitate the formation of a plurality of independent receiving chambers 418.

In one presently preferred embodiment, the dividing walls 416a, 416b, 416c, 416d, 416e are preferably disposed or seated in a spaced apart relationship within the internal periphery of the base 414 of the primary capsule 411 along the length of the longitudinally extending body, whereby forming five (5) independent receiving chambers 418a, 418b, 418c, 418d, 418e. Each receiving chamber 418a, 418b, 418c, 418d, 418e of the primary capsule 411are preferably configured having an internal periphery dimensionally sufficient for receiving one or more active ingredients or medicaments (*e.g.*, pharmaeceutical, biotechnical, nutraceutical, vitamin, dietary supplement, mineral or combination thereof) therein.

Still referring to Figure 7, one presently preferred embodiment of an encapsulation process, as defined by the structural configuration of the multi-compartment capsule 410, may comprise the steps of: (1) introducing one or more active ingredients or medicaments into receiving chamber 418e defined by dividing walls 416d, 416e which are vertically disposed along the length of the elongated body of the base 414; (2) introducing one or more active ingredients or medicaments into receiving chamber 418d defined by dividing walls 416c, 416d which are vertically disposed along the length of the elongated body of the base 414; (3) introducing one or more active ingredients or medicaments into receiving chamber 418c defined by dividing walls 416b, 416c which are vertically disposed along the length of the elongated body of the base 414; (4) introducing one or more active ingredients or

medicaments into receiving chamber 418b defined by dividing walls 416b, 416e which are vertically disposed along the length of the elongated body of the base 414; (5) disposing dividing wall 416a along the length of the elongated body of the base 414 perpendicular to the disposition of dividing walls 416b, 416c, 416d, 416e and introducing one or more active ingredients or medicaments into receiving chamber 418a; and (6) selectively positioning the cap 412 in sealing relationship with the base 414 to form one presently preferred embodiment of a single, dosage multi-compartment capsule 410. As appreciated, the dividing wall 416a may also function in the formation of the sealing relationship between the base 414 and the corresponding cap 412, if structurally desired.

As illustrated by way of example, and not by way of restriction, a solid may be selectively introduced into at least a portion of the internal periphery of the receiving chamber 418a, a dispersion may be selectively introduced into at least a portion of the internal periphery of the receiving chamber 418b, a liquid may be selectively introduced into at least a portion of the internal periphery of the receiving chamber 418c, a solid may be selectively introduced into at least a portion of the internal periphery of the receiving chamber 418d and a liquid may be selectively introduced into at least a portion of the internal periphery of the receiving chamber 418e.

Although the ingredient(s) introduced into one of the receiving chambers 418 may be the same ingredient or may be different from the ingredient(s) introduced into the other receiving chambers, the active ingredient(s) in at least two of the receiving chambers 418 preferably comprise a physical state (*e.g.*, solid, liquid, gas or dispersion) that is different from the physical state of the active ingredient(s) in one or more of the remaining receiving chambers. Those skilled in the art will readily recognize other possible modifications and adaptations relative to the contemplated variations in physical states (*e.g.*, solid, liquid, gas and dispersion) of the active ingredient(s) selectively introduced within the receiving chambers 418 which are consistent with the spirit and scope of the present invention. It is intended, therefore, that the figures and examples provided herein be viewed as exemplary of

the principles of the present invention, and not as restrictive to a particular structure or method for implementing those principles.

Referring now to Figure 8, an alternate presently preferred embodiment of a multi-compartment capsule 510 includes a capsular base 514 preferably configured having an elongated or longitudinally extending body, a corresponding cap 512 and a plurality of dividing walls 516 selectively disposed along the length of the longitudinally extending body of the base, both horizontally and vertically. In structural design, the size, shape and positioning of the dividing walls 516a, 516b, 516c, 516d along the length of the longitudinally extending body of the base 514 facilitate the formation of a plurality of independent receiving chambers 518.

In one presently preferred embodiment, the dividing walls 516a, 516b, 516c, 516d, 516e are preferably disposed or seated in a spaced apart relationship within the internal periphery of the base 514 of the primary capsule 511 along the length of the longitudinally extending body, whereby forming five (5) independent receiving chambers 518a, 518b, 518c, 518d, 518e. Each of the receiving chamber 518a, 518b, 518c, 518d, 518e of the primary capsule 411are preferably configured having an internal periphery dimensionally sufficient for receiving one or more active ingredients or medicaments (*e.g.*, pharmaeceutical, biotechnical, nutraceutical, vitamin, dietary supplement, mineral or combination thereof) therein. Moreover, receiving chamber 518d is formed having an internal periphery sufficient for receiving a secondary capsule 520. The secondary capsule 520 being configured with a base 524, corresponding cap 522 and a dividing wall 526 defining a first receiving chamber 528a and a second receiving chamber 528b. The first receiving chamber 528a is preferably configured having an internal periphery sufficient for receiving one or more active ingredients or medicaments (*e.g.*, pharmaeceutical, biotechnical, nutraceutical, vitamin, dietary supplement, mineral or combination thereof) having a first physical state (*e.g.*, solid, liquid, gas or dispersion) therein. Similarly, the second receiving chamber 528b is configured having an internal periphery sufficient for receiving one or more active ingredients or medicaments (*e.g.*, pharmaeceutical, biotechnical, nutraceutical, vitamin, dietary supplement,

mineral or combination thereof) having a second physical state (*e.g.*, solid, liquid, gas or dispersion), wherein the physical state of the ingredient(s) in the second receiving chamber varies from the physical state of the ingredient(s) in the first receiving chamber. As contemplated and disclosed hereinabove, after the ingredients are introduced into the respective receiving chambers 528a, 528b, the cap 522 may be positioned in sealing relationship with the base 524 of the secondary capsule 520.

Still referring to Figure 8, as illustrated by way of example, and not by way of restriction, a solid may be selectively introduced into at least a portion of the internal periphery of the receiving chamber 528a and a liquid may be selectively introduced into at least a portion of the internal periphery of the receiving chamber 528b. Although the ingredient(s) introduced into one of the receiving chamber 528a may be the same ingredient or may be different from the ingredient(s) introduced into receiving chamber 528b, the active ingredient(s) in the first receiving chamber 528a comprise a physical state (*e.g.*, solid, liquid, gas or dispersion) that is different from the physical state of the active ingredient(s) in receiving chambers 528b. Those skilled in the art will readily recognize other possible modifications and adaptations relative to the contemplated variations in physical states (*e.g.*, solid, liquid, gas and dispersion) of the active ingredient(s) selectively introduced within the receiving chambers 528 which are consistent with the spirit and scope of the present invention. It is intended, therefore, that the figures and examples provided herein be viewed as exemplary of the principles of the present invention, and not as restrictive to a particular structure or method for implementing those principles

One presently preferred embodiment of an encapsulation process, as defined by the structural configuration of the multi-compartment capsule 510, may comprise the steps of: (1) introducing one or more active ingredients or medicaments (*e.g.*, pharmaeceutical, biotechnical, nutraceutical, vitamin, dietary supplement, mineral or combination thereof) into receiving chamber 518e defined by dividing walls 516d, 516e which are disposed vertically along the length of the elongated body of the base 514; (2) introducing a secondary capsule 520 into receiving chamber 518d defined by dividing walls 516c, 516d which are disposed

vertically along the length of the elongated body of the base 514; (3) introducing one or more active ingredients or medicaments (*e.g.*, pharmaeceutical, biotechnical, nutraceutical, vitamin, dietary supplement, mineral or combination thereof) into receiving chamber 518c defined by dividing walls 516b, 516c which are disposed vertically along the length of the elongated body of the base 514; (4) introducing one or more active ingredients or medicaments (*e.g.*, pharmaeceutical, biotechnical, nutraceutical, vitamin, dietary supplement, mineral or combination thereof) into receiving chamber 518b defined by dividing walls 516b, 516e which are disposed vertically along the length of the elongated body of the base 514; (5) disposing dividing wall 516a along the length of the elongated body of the base 514 perpendicular to the disposition of dividing walls 516b, 516c, 516d, 516e and introducing one or more active ingredients or medicaments (*e.g.*, pharmaeceutical, biotechnical, nutraceutical, vitamin, dietary supplement, mineral or combination thereof) into receiving chamber 518a; and (6) selectively positioning the cap 512 in sealing relationship with the base 514 to form one presently preferred embodiment of a single, dosage multi-compartment capsule 510. As appreciated, the dividing wall 516a may also function in the formation of the sealing relationship between the base 514 and the corresponding cap 512, if structurally desired.

As illustrated by way of example, and not by way of limitation, a solid may be selectively introduced into at least a portion of the internal periphery of receiving chamber 518a, a dispersion may be selectively introduced into at least a portion of the internal periphery of receiving chamber 518b, a liquid may be selectively introduced into at least a portion of the internal periphery of the receiving chamber 518c and a liquid may be selectively introduced into at least a portion of the internal periphery of the receiving chamber 518e. Although the ingredient(s) introduced into one of the receiving chambers 518 may be the same ingredient or may be different from the ingredient(s) introduced into the other receiving chambers, the active ingredient(s) in at least two of the receiving chambers 518 preferably comprise a physical state (*e.g.*, solid, liquid, gas or dispersion) that is different from the physical state of the active ingredient(s) in one or more of the remaining receiving

chambers. Those skilled in the art will readily recognize other possible modifications and adaptations relative to the contemplated variations in physical states (*e.g.*, solid, liquid, gas and dispersion) of the active ingredient(s) selectively introduced within the receiving chambers 518 which are consistent with the spirit and scope of the present invention. It is intended, therefore, that the figures and examples provided herein be viewed as exemplary of the principles of the present invention, and not as restrictive to a particular structure or method for implementing those principles.

Referring now to Figure 9, yet another presently preferred embodiment of a multi-compartment capsule of the present invention, generally designated as 610, is shown comprising a primary capsule 611 and a secondary capsule 620 selectively positionable within at least a portion of an internal periphery of the primary capsule. The primary capsule 611 having a receiving chamber 618 preferably formed having an internal periphery sufficient for receiving the secondary capsule 620, together with one or more active ingredients or medicaments (*e.g.*, pharmaeceutical, biotechnical, nutraceutical, vitamin, dietary supplement, mineral or combination thereof) therein. The secondary capsule 620 comprising a capsular base 624 preferably configured having an elongated or longitudinally extending body, a corresponding cap 622 and a plurality of dividing walls 626 selectively disposed along the length of the longitudinally extending body of the base, both horizontally and vertically. In structural design, the size, shape and positioning of the dividing walls 626a, 626b, 626c, 626d along the length of the longitudinally extending body of the base 624 facilitate the formation of a plurality of independent receiving chambers 628.

In one presently preferred embodiment, the dividing walls 626a, 626b, 626c, 626d, 426e are preferably disposed or seated in a spaced apart relationship within the internal periphery of the base 624 of the secondary capsule 620 along the length of the longitudinally extending body, whereby forming five (5) independent receiving chambers 628a, 628b, 628c, 628d, 628e. Each receiving chamber 628a, 628b, 628c, 628d, 628e of the secondary capsule 620 are preferably configured having an internal periphery dimensionally sufficient for

receiving one or more active ingredients or medicaments (*e.g.*, pharmaeceutical, biotechnical, nutraceutical, vitamin, dietary supplement, mineral or combination thereof) therein.

One presently preferred embodiment of an encapsulation process, as defined by the structural configuration of the multi-compartment capsule 610, may comprise the steps of: (1) introducing one or more active ingredients or medicaments (*e.g.*, pharmaeceutical, biotechnical, nutraceutical, vitamin, dietary supplement, mineral or combination thereof) into receiving chamber 628e defined by dividing walls 626d, 626e which are vertically disposed along the length of the elongated body of the base 624; (2) introducing one or more active ingredients or medicaments (*e.g.*, pharmaeceutical, biotechnical, nutraceutical, vitamin, dietary supplement, mineral or combination thereof) into receiving chamber 628d defined by dividing walls 626c, 626d which are vertically disposed along the length of the elongated body of the base 624; (3) introducing one or more active ingredients or medicaments (*e.g.*, pharmaeceutical, biotechnical, nutraceutical, vitamin, dietary supplement, mineral or combination thereof) into receiving chamber 628c defined by dividing walls 626b, 626c which are vertically disposed along the length of the elongated body of the base 624; (4) introducing one or more active ingredients or medicaments (*e.g.*, pharmaeceutical, biotechnical, nutraceutical, vitamin, dietary supplement, mineral or combination thereof) into receiving chamber 628b defined by dividing walls 626b, 626e which are vertically disposed along the length of the elongated body of the base 624; (5) disposing dividing wall 626a along the length of the elongated body of the base 624 perpendicular to the disposition of dividing walls 626b, 626c, 626d, 626e and introducing one or more active ingredients or medicaments (*e.g.*, pharmaeceutical, biotechnical, nutraceutical, vitamin, dietary supplement, mineral or combination thereof) into receiving chamber 628a; (6) selectively positioning the cap 622 in sealing relationship with the base 624 of the secondary capsule 620; (7) introducing the secondary capsule 620 and one or more ingredients or medicaments (*e.g.*, pharmaeceutical, biotechnical, nutraceutical, vitamin, dietary supplement, mineral or combination thereof) into the receiving chamber 618 of the primary capsule 611; and (8) selectively positioning the cap 612 in sealing relationship with the base 614 of the primary

capsule 611 to form one presently preferred embodiment of a single, dosage multi-compartment capsule 610.

As illustrated by way of example, and not by way of restriction, a solid may be selectively introduced into at least a portion of the internal periphery of the receiving chamber 628a, a dispersion may be selectively introduced into at least a portion of the internal periphery of the receiving chamber 628b, a liquid may be selectively introduced into at least a portion of the internal periphery of the receiving chamber 628c, a solid may be selectively introduced into at least a portion of the internal periphery of the receiving chamber 628d and a liquid may be selectively introduced into at least a portion of the internal periphery of the receiving chamber 628e of the secondary capsule 620. In addition, a gas may be introduced into at least a portion of the internal periphery of the receiving chamber 618 of the primary capsule 611.

Although the ingredient(s) introduced into one of the receiving chambers 618, 628 of the primary and secondary capsules, respectively, may be the same ingredient or may be different from the ingredient(s) introduced into the other receiving chambers, the active ingredient(s) in at least two of the receiving chambers 618, 628 preferably comprise a physical state (*e.g.*, solid, liquid, gas or dispersion) that is different from the physical state of the active ingredient(s) in one or more of the remaining receiving chambers. Those skilled in the art will readily recognize other possible modifications and adaptations relative to the contemplated variations in physical states (*e.g.*, solid, liquid, gas and dispersion) of the active ingredient(s) selectively introduced within the receiving chambers 618, 628 which are consistent with the spirit and scope of the present invention. It is intended, therefore, that the figures and examples provided herein be viewed as exemplary of the principles of the present invention, and not as restrictive to a particular structure or method for implementing those principles.

Another presently preferred embodiment of a multi-compartment capsule of the present invention, generally designated as 710 in Figure 10, is shown comprising a secondary capsule 720 including one or more active ingredients or medicaments (*e.g.*, pharmaceutical,

biotechnical, nutraceutical, vitamin, dietary supplement, mineral or combination thereof) within at least a portion of the internal periphery of a receiving chamber 728 and having a size and shape sufficient for being selectively introduced within at least a portion of the internal periphery of a receiving chamber 718 of a primary capsule 711. The primary capsule 711 also includes one or more active ingredients or medicaments (*e.g.*, pharmaeceutical, biotechnical, nutraceutical, vitamin, dietary supplement, mineral or combination thereof) introduced within the internal periphery of the receiving chamber 718, wherein the active ingredient(s) introduced into the primary capsule comprises a physical state (*e.g.*, solid, liquid, gas or dispersion) which differs from the physical state of the active ingredient(s) introduced into the internal periphery of the secondary capsule. In structural design, the primary capsule 711 further comprises a cap 712 having a generally U-shaped configuration adapted to provide a sealing relationship when engaging the corresponding base 714, thereby reducing dead space volume in the internal periphery of the receiving chamber 718 of the base. In this regard, the configuration of the cap 712 generally eliminates or substantially reduces the potential dead space volume within the internal periphery of the receiving chamber 718, thus functionally negating the opportunity for reaction between an air bubble and the active ingredient(s) introduced into the base 714 of the primary capsule 711.

One presently preferred embodiment of an encapsulation process, as defined by the structural configuration of the multi-compartment capsule 710, may include the steps of: (1) introducing one or more active ingredients or medicaments (*e.g.*, pharmaeceutical, biotechnical, nutraceutical, vitamin, dietary supplement, mineral or combination thereof) into receiving chamber 728; (2) selectively positioning the cap 722 in sealing relationship with the base 724 of the secondary capsule 720; (3) introducing one or more active ingredients or medicaments (*e.g.*, pharmaeceutical, biotechnical, nutraceutical, vitamin, dietary supplement, mineral or combination thereof), together with the secondary capsule 720, into the receiving chamber 718 of the primary capsule 711; and (4) selectively positioning the cap 712 having a general U-shaped configuration in sealing relationship with the base 714 of the primary capsule 711 to form a presently preferred embodiment of a single, dosage multi-compartment

capsule 710, wherein eliminating or substantially reducing dead space volume within the internal periphery of the receiving chamber 718.

A solid is selectively introduced within at least a portion of the internal periphery of the receiving chamber 728 of the secondary capsule 720 and a liquid is selectively introduced within at least a portion of the internal periphery of the receiving chamber 718 of the primary capsule 711. Although the ingredient(s) introduced into the receiving chamber 718 of the primary capsule 711 may be the same or different from the ingredient(s) introduced into the receiving chamber 728 of the secondary capsule 720, the active ingredient(s) in the primary capsule have a physical state (*i.e.*, solid, liquid, gas or dispersion) that various from the physical state of the active ingredient(s) in the secondary capsule. Accordingly, those skilled in the art will readily recognize other possible modifications and adaptations relative to the contemplated variations in physical states of the active ingredient(s) selectively introduced within the receiving chambers 718, 728 of the primary and secondary capsules 711, 720, respectively, which are consistent with the spirit and scope of the present invention. It is intended, therefore, that the figures and examples provided herein be viewed as exemplary of the principles of the present invention, and not as restrictive to a particular structure or method for implementing those principles.

Referring now to Figures 11 and 12, yet another presently preferred embodiment of a multi-compartment capsule 810 of the present invention is shown comprising a secondary capsule 820 including one or more active ingredients or medicaments (*e.g.*, pharmaeceutical, biotechnical, nutraceutical, vitamin, dietary supplement, mineral or combination thereof) within at least a portion of the internal periphery of a receiving chamber 828. The secondary capsule 820 being preferably formed having a size and shape sufficient for being selectively introduced within at least a portion of the internal periphery of a receiving chamber 818 of a primary capsule 811. Similarly, the primary capsule 811 includes one or more active ingredients or medicaments (*e.g.*, pharmaeceutical, biotechnical, nutraceutical, vitamin, dietary supplement, mineral or combination thereof) introduced within the internal periphery of the receiving chamber 818, together with the secondary capsule 820, wherein the active

ingredient(s) introduced into the primary capsule comprises a physical state (*e.g.*, solid, liquid, gas or dispersion) which differs from the physical state of the active ingredient(s) introduced into the internal periphery of the secondary capsule 820.

In preferred structural design, the primary capsule 811 comprises a cap 812 having a general cylindrical configuration adapted to provide a sealing relationship when engaging the corresponding base 814 to form a single dosage, multi-compartment capsule 810. An amount of filling material 840 may be introduced into the internal periphery of the cap 812 to fill, either partially or completely, the inner volume of the cap, thereby reducing the dead space volume in the internal periphery of the receiving chamber 818 of the base. In this regard, the configuration of the addition of the filler material 840 relative to the internal periphery of the cap 812 generally eliminates or substantially reduces the potential dead space volume within the internal periphery of the receiving chamber 818, thus functionally negating the potential for a reaction between an air bubble and the active ingredient(s) introduced into the base 814 of the primary capsule 811.

Preferably, the filling material 840 introduced into at least a portion of the internal periphery of the cap 812 may include a hydrophilic polymer, such as gelatin. It will be readily appreciated by those skilled in the art that other filling materials may be used, such as, for example, starch, casein, chitosan, soya bean protein, safflower protein, alginates, gellan gum, carrageenan, xanthan gum, phtalated gelatin, succinated gelatin, cellulosephtalate-acetate, polyvinylacetate, hydroxypropyl methyl cellulose, (HPMC), oleoresin, polyvinylacetate-phtalate, polymerisates of acrylic or methacrylic esters, and mixtures thereof, or the like, and/or combinations thereof. In other presently preferred embodiments of the present invention, the filling material 840 may include the introduction of an inert compound, for example, nitrogen gas into at least a portion of the internal periphery of the cap 811. Based on the principals of eliminating or reducing the volume dead space in multi-compartment capsules disclosed herein, those skilled in the art will readily recognize other possible modifications and combinations which are consistent with the spirit and scope of the present invention. It is intended, therefore, that the examples provided

herein be viewed as exemplary of the principles of the present invention, and not as restrictive to a particular structure or process for implementing those principles.

The filling material 840 introduced within at least a portion of the internal periphery of the cap 812 of the primary capsule 811 is generally intended to promote a binding contact with at least a portion of the cap 822 of the secondary capsule 820, thereby seating at least a portion of the secondary capsule within the cap of the primary capsule and forming a molded appearance. As appreciated, the introduction of the filling material 840 into the cap 812 of the primary capsule 811 prior to the joining and sealing process may prevent the opportunity for a reaction between an air bubble and the active medicament(s) within the receiving chamber 818 of the primary capsule, while preserving the overall rounded shape of the multi-compartment capsule 910 for ease of swallowing by a consumer.

As best illustrated in Figure 12, one presently preferred embodiment of an encapsulation process, as defined by the structural configuration of the multi-compartment capsule 810, may include the steps of: (1) introducing one or more active ingredients or medicaments (*e.g.*, pharmaeceutical, biotechnical, nutraceutical, vitamin, dietary supplement, mineral or combination thereof) into at least a portion of the receiving chamber 828; (2) selectively positioning the cap 822 in sealing relationship with the base 824 of the secondary capsule 820; (3) introducing one or more active ingredients or medicaments (*e.g.*, pharmaeceutical, biotechnical, nutraceutical, vitamin, dietary supplement, mineral or combination thereof), together with the secondary capsule 820, into at least a portion of the receiving chamber 818 of the primary capsule 811; (4) introducing a filling material 840 into at least a portion of the internal periphery of the cap 812 (*i.e.*, filling the cap); and (5) selectively positioning the cap 812 having a general conical configuration in sealing relationship with the base 814 of the primary capsule 811 to form one presently preferred embodiment of a single, dosage multi-compartment capsule 810, wherein eliminating or substantially reducing dead space volume within the internal periphery of the cap 812 and the receiving chamber 818, respectively.

A solid may be selectively introduced within at least a portion of the internal periphery of the receiving chamber 828 of the secondary capsule 820 and a liquid may be selectively introduced within at least a portion of the internal periphery of the receiving chamber 818 of the primary capsule 811. Although the ingredient(s) introduced into the receiving chamber 818 of the primary capsule 811 may be the same or different from the ingredient(s) introduced into the receiving chamber 828 of the secondary capsule 820, the active ingredient(s) in the primary capsule have a physical state (*i.e.*, solid, liquid, gas or dispersion) that various from the physical state of the active ingredient(s) in the secondary capsule. Accordingly, those skilled in the art will readily recognize other possible modifications and adaptations relative to the contemplated variations in physical states of the active ingredient(s) selectively introduced within the receiving chambers 818, 828 of the primary and secondary capsules 811, 820, respectively, which are consistent with the spirit and scope of the present invention. It is intended, therefore, that the figures and examples provided herein be viewed as exemplary of the principles of the present invention, and not as restrictive to a particular structure or method for implementing those principles.

Referring now to Figure 13, another presently preferred embodiment of a multi-compartment capsule, generally designated at 910, is shown comprising a tertiary capsule 930 including one or more active ingredients or medicaments (*e.g.*,pharmaeceutical, biotechnical, nutraceutical, vitamin, dietary supplement, mineral or combination thereof) within at least a portion of the internal periphery of a receiving chamber 938 and having a size and shape sufficient for being introduced into the internal periphery of a receiving chamber 928 of a secondary capsule 920. The secondary capsule 920 having one or more active ingredients or medicaments (*e.g.*,pharmaeceutical, biotechnical, nutraceutical, vitamin, dietary supplement, mineral or combination thereof) introduced within at least a portion of the internal periphery of a receiving chamber 928, together with the tertiary capsule 930. The secondary capsule 920 preferably formed having a size and shape sufficient for being selectively introduced within at least a portion of the internal periphery of a receiving chamber 918 of a primary capsule 911. Similarly, the primary capsule 911 may

include one or more active ingredients or medicaments (*e.g.*,pharmaeceutical, biotechnical, nutraceutical, vitamin, dietary supplement, mineral or combination thereof) introduced within the internal periphery of the receiving chamber 818, together with the secondary capsule 920 which houses the tertiary capsule 930. In one presently preferred embodiment, the active ingredient(s) introduced into the secondary capsule 920 comprises a physical state (*e.g.*, solid, liquid, gas or dispersion) which differs from the physical state of the active ingredient(s) introduced into the internal periphery of the primary capsule 911 and the internal periphery of the tertiary capsule 930.

In preferred structural design, the primary capsule 911 comprises a cap 912 having a general cylindrical configuration adapted to provide a sealing relationship when engaging the corresponding base 914 to form a single dosage, multi-compartment capsule 910. An amount of filling material 940 may be introduced into at least a portion of the internal periphery of the cap 912 to fill, either partially or completely, the inner volume of the cap, thereby reducing the dead space volume in the cap and the internal periphery of the receiving chamber 918 of the base. In this regard, the configuration of the addition of the filler material 940 relative to the internal periphery of the cap 912 may generally eliminate or substantially reduce the potential dead space volume within the internal periphery of the receiving chamber 918, thus functionally negating the potential for a reaction between an air bubble and the active ingredient(s) introduced into the base 914 of the primary capsule 911.

Preferably, the filling material 940 introduced into at least a portion of the internal periphery of the cap 912 may include a hydrophilic polymer, such as gelatin. It will be readily appreciated by those skilled in the art that other filling materials may be used, such as, for example, starch, casein, chitosan, soya bean protein, safflower protein, alginates, gellan gum, carrageenan, xanthan gum, phtalated gelatin, succinated gelatin, cellulosephtalate-acetate, polyvinylacetate, hydroxypropyl methylcellulose, oleoresin, polyvinylacetate-phtalate, polymerisates of acrylic or methacrylic esters, and mixtures thereof, or the like, and/or combinations thereof. In other presently preferred embodiments of the present invention, the filling material 840 may include the introduction of an inert

compound, for example, nitrogen gas into at least a portion of the internal periphery of the cap 912. Based on the principals of eliminating or reducing the volume dead space in multi-compartment capsules disclosed herein, those skilled in the art will readily recognize other possible modifications and combinations which are consistent with the spirit and scope of the present invention. It is intended, therefore, that the examples provided herein be viewed as exemplary of the principles of the present invention, and not as restrictive to a particular structure or process for implementing those principles.

The filling material 940 introduced within at least a portion of the internal periphery of the cap 912 of the primary capsule 911 is generally intended to promote a binding contact with at least a portion of the cap 922 of the secondary capsule 920, thereby seating at least a portion of the secondary capsule within the cap of the primary capsule and forming a molded appearance. As appreciated, the introduction of the filling material 940 into the cap 912 of the primary capsule 911 prior to the joining and sealing process tends to prevent the opportunity for a reaction between an air bubble and the active medicament(s) within the receiving chamber 918 of the primary capsule, while preserving the overall rounded shape of the multi-compartment capsule 910 for ease of swallowing by a consumer.

As best illustrated in Figure 13, one presently preferred embodiment of an encapsulation process, as defined by the structural configuration of the multi-compartment capsule 910, may include the steps of: (1) introducing one or more active ingredients or medicaments (*e.g.*, pharmaeceutical, biotechnical, nutraceutical, vitamin, dietary supplement, mineral or combination thereof) into at least a portion of the receiving chamber 938 of a tertiary capsule 930; (2) selectively positioning the cap 932 in sealing relationship with the base 934 of the tertiary capsule 930; (3) introducing one or more active ingredients or medicaments (*e.g.*, pharmaeceutical, biotechnical, nutraceutical, vitamin, dietary supplement, mineral or combination thereof), together with the tertiary capsule 930, into at least a portion of the receiving chamber 928 of the secondary capsule 920; (4) selectively positioning the cap 922 in sealing relationship with the base 924 of the secondary capsule 920; (5) introducing one or more active ingredients or medicaments (*e.g.*, pharmaeceutical,

biotechnical, nutraceutical, vitamin, dietary supplement, mineral or combination thereof), together with the secondary capsule 920, into at least a portion of the receiving chamber 918 of the primary capsule 911; (6) introducing a filling material 940 into at least a portion of the internal periphery of the cap 912 (*i.e.*, preferably filling the cap); and (7) selectively positioning the cap 912 having a general conical configuration in seating relationship with at least a portion of the secondary capsule 920 and sealing the base 914 of the primary capsule 911 to form one presently preferred embodiment of a single, dosage multi-compartment capsule 910, wherein eliminating or substantially reducing dead space volume within the internal periphery of the cap 912 and the receiving chamber 918, respectively.

A solid may be introduced within at least a portion of the internal periphery of the receiving chamber 938 of the tertiary capsule 930, a liquid may be introduced into at least a portion of the internal periphery of the secondary capsule 920 and a solid may be selectively introduced within at least a portion of the internal periphery of the receiving chamber 918 of the primary capsule 911. Although the ingredient(s) introduced into the receiving chambers 918, 928, 938 of the primary, secondary and tertiary capsules 911, 920, 930, respectively, may be the same or different from the ingredient(s) introduced into the other receiving chambers, the active ingredient(s) in at least two of the receiving chambers 918, 928, 938 have different physical states (*i.e.*, solid, liquid, gas or dispersion). Those skilled in the art will readily recognize other possible modifications and adaptations relative to the contemplated variations in physical states of the active ingredient(s) selectively introduced within the receiving chambers 918, 928, 938 of the primary, secondary and tertiary capsules 911, 920, 930, respectively, which are consistent with the spirit and scope of the present invention. It is intended, therefore, that the figures and examples provided herein be viewed as exemplary of the principles of the present invention, and not as restrictive to a particular structure or method for implementing those principles.

Generally referring to Figures 1-13, the component parts of the presently preferred embodiments of the multi-compartment capsules (*i.e.*, capsular base, corresponding cap and dividing walls) of the present invention may comprise a hydrophilic polymer, such as gelatin

(marine or animal based product). Other suitable materials forming the capsules may include starch, casein, chitosan, soya bean protein, safflower protein, alginates, gellan gum, carrageenan, xanthan gum, phtalated gelatin, succinated gelatin, cellulosephtalate-acetate, polyvinylacetate, hydroxypropyl methyl cellulose (HPMC), oleoresins, polyvinylacetate-phtalate, polymerisates of acrylic or methacrylic esters, and mixtures thereof, or the like, and/or combinations thereof. The material comprising the capsular components may further include between about 0% to 40% of pharmaeceutically acceptable plasticizers based upon the weight of the hydrophilic polymer. Plasticizers that may be employed include, for example and not by way of limitation, polyethylene glycol, glycerol, sorbitol, dioctyl-sodium sulfosuccinate, triethyl citrate, tributyl citrate, 1,2-propyleneglycol, mono-acetates, di-acetates, or tri-acetates of glycerol, mixtures thereof, or the like, and/or combinations thereof. As appreciated, plasticizers may also be used in the development of a soft elastic shell, often referred to as a soft gelatin capsule or "soft gel"capsule, for a primary capsule, a secondary capsule and/or a tertiary capsule.

The capsular shell material may contain pharmaeceutically acceptable lubricants in the range of about 0% to 10%, based upon the weight of the hydrophilic polymer. Lubricants that may be used include, for example and not by way of limitation, aluminum stearate, calcium stearate, magnesium stearate, tin stearate, talc, sodium lauryl sulfate, lecithins, mineral oils, stearic acid, silicones, mixtures thereof, or the like, and/or combinations thereof. One presently preferred embodiment of the multi-compartmental capsules of the present invention (*e.g.*, primary capsule, secondary capsule, tertiary capsule, etc.) may include, for example, LICAPS® capsules (for poorly soluble compounds), VCAPS™ capsules (made from cellulosic raw materials), CONI-SNAP® capsules and PRESS-FIT® capsules which are all presently manufactured by Capsugel, a subsidiary of Pfizer, Inc.

In one presently preferred embodiment of an encapsulation process, the primary capsule may be kept under conditions of low humidity within a filling machine during the contemplated steps of rectifying and assembling. In certain embodiments, the primary capsule may contain moisture content in the range of approximately 0% to 6% of the total

weight. Similarly, a secondary capsule, a tertiary capsule, etc. may be processed in the same manner as the primary capsule relative to conditions of low humidity during the steps of rectifying and assembling. As contemplated herein, a moisture content of approximately 0% to 3% by weight is preferable. However, capsules having a higher moisture content than those stated herein are certainly not outside the spirit and scope of the present invention.

As illustrated in Figures 1-9 and 11-13, the shape of the base and corresponding cap of the capsules (*e.g.*, primary, secondary, tertiary, etc.) of the presently preferred embodiments of the multi-compartment capsules are configured having a general cylindrical shape which defines a diameter and length sufficient for the introduction of an internal smaller capsule or one or more dividing walls along the length of the capsular base. It is apparent that other geometrical configurations of the cap are likewise suitable and contemplated herein, such as the general U-shaped configuration of the cap shown in Figure 10. It is intended, therefore, that the examples provided herein be viewed as exemplary of the principles of the present invention, and not as restrictive to any particular structure or configuration for implementing those principles.

In one presently preferred embodiment, the clearance between the primary capsule and the secondary capsule introduced within the internal periphery of the primary capsule is preferably greater than +0.2 mm. The clearance between the outer capsular walls of the secondary capsule and the inner capsular walls of the primary capsule (or the tertiary capsule and the secondary capsule) may be in the range of about 0 mm to 0.5 mm, whereas the outer capsular walls of the secondary capsule or tertiary capsule may be in actual contact with the inner capsular walls of the primary capsule or secondary capsule, respectively. As appreciated, in an effort to structural facilitate independent receiving chambers on opposing sides of a dividing wall introduced within the internal periphery of a base of a capsule, the perimeter of the dividing wall preferably engages the inner capsular walls of the capsule to provide a sealing relationship therebetween.

As further contemplated herein, the inner capsular walls of a primary capsule may be treated with an adhesive sufficient to improve engagement between the primary capsule and

the outer capsular walls of a secondary capsule. A suitable technique to apply an adhesive may be by way of spraying the same on the shells and capsules immediately before assembling the same. Suitable adhesives that may be used may include, for example, tackidex, an aqueous gelatin solution, or the like.

The primary, secondary or tertiary capsules, in accordance with the present invention, may be formed having the same or different colors. Moreover, the base and corresponding cap of a single capsule may be formed having different colors in an effort to enhance the aesthetics of the capsule to the consumer. In one presently preferred embodiment of a multi-compartment capsule of the present invention, the dosage may be banded, sealed or easily dividable in a contact area of the primary and secondary capsules or the sealing band may be color-coded to assist in branding, if desired.

It is further contemplated herein that a multi-compartment capsule of the present invention may comprise component parts of the capsule having various time-release coatings to facilitate the release and ultimately the absorption of those active ingredients introduced into the different receiving chambers of the multi-compartment capsule to release at different release rates. In particular, a primary capsule may be formed having a conventional time-release coating that dissolves and releases the active ingredient(s) contained therein before the timed-release of the active ingredient(s) contained within a secondary capsule. Likewise, the dividing walls disposed within the internal periphery of the base of a capsule may be formed having conventional time-release coatings that dissolve and release the active ingredients within each receiving chamber defined by the dividing walls at different rates, thereby delivering the active ingredients or medicaments contained within a multi-compartment capsule at different rates. Certain active ingredients or medicaments may, therefore, be delivered at a selected interval, while other ingredients may be released at a later interval. In this way, the novel design of the multi-compartment capsules of the present invention may facilitate precision delivery of active ingredients to targeted areas of the consumer.

The disclosure of secondary and tertiary capsules may be replaced with other forms of microencapsulation. Microencapsulation, as previously described, refers to the process whereby minute parcels of a solid, liquid, gas or dispersion, introduced into one or more of the receiving chambers as active ingredient(s), are film-coated with a secondary material in order to shield the active ingredient from its surrounding environment. Microcapsules may measure from microns to several millimeters, whereas the main purpose being to facilitate the release of the active ingredients at different release rates.

The incorporation of time-release coatings to varying the release rates of the active ingredients of a multi-compartment capsule may be used to target key time intervals or events when the body may be most able to utilize the active ingredients. In one presently preferred embodiment of the present invention, all of the active ingredients may be microencapsulated. In alternate presently preferred embodiments, only selected ingredients may be microencapsulated for delayed release, while other ingredients may be provided for immediate absorption. Thus, the incorporation of time-release coatings in the encapsulation process when forming a multi-compartment capsule may be specifically designed to fit the needs and desires of numerous different users having similar conditions that are being targeted for treatment.

As contemplated herein, the physical states of active ingredients are characterized into one of four different states (*e.g.*, solid, liquid, gas or dispersion). These four different states are sometimes referred to as "phases" (*i.e.*, solid phase, liquid phase, gas phase or dispersion phase). For purposes of the present invention, the term "solid" is defined as including, by way of example only and not by way of limitation, pills, tablets, capsules (including both hard and soft elastic), powders, granulation, flakes, troches (lozenges and pastilles), suppositories and semi-solid pastes, ointments, emulsions or creams. The term "liquid" is defined as including, by way of example only and not by way of limitation, solutions, spirits, elixirs, sprays, syrups or fluid extracts. The term "dispersion" is defined as including, by way of example only and not by way of limitation, aerosols (liquid or solid in gas), suspensions

(solid in liquid), emulsions (liquid in liquid), foams (gas in liquid), solid foams (solid in gas) or gels (liquid or solid in solid).

The active ingredients or medicaments introduced into the receiving chambers of the multi-compartment capsules of the present invention preferably comprise a pharmaeceutical, biotechnical, nutraceutical, vitamin, dietary supplement, mineral or combination thereof. For purposes of the present invention, the term "pharmaeceutical" is defined as any substance that affects the structure or functioning of a living organism. Pharmaeceuticals, sometimes referred to as "drugs" are widely used for the prevention, diagnosis and treatment of diseases and for the relief of symptoms. The term "biotechnical" is defined as any substance that is derived from a biotechnology process. Biotechnology, sometimes shortened to "biotech", is the development of techniques and methods (*e.g.*, genetic engineering, protein engineering, genomics, proteomics, monoclonal antibody production, polymerase chain reaction, transgenics and the like) for the application of biological processes to the production of materials of use in medicine, foods, nutrition and industry. The term "nutraceutical" is defined as any substance that is a food of a part of a food and provides medical or health benefits, including the prevention and treatment of disease. The term "vitamin" is defined as any of various organic substances or compounds that are essential for the normal processes of growth and maintenance (*e.g.*, essential for energy transformation and regulation of metabolism) of the body which are present in natural foodstuffs or sometimes produced within the body. The term "dietary supplement" is defined as any product (other than tobacco) intended to supplement the diet that bears or contains one or more of the following dietary ingredients: (A) a vitamin; (B) a mineral; (C) an herb or other botanical; (D) an amino acid; (E) a dietary substance for supplementing the diet by increasing the total dietary intake; or (F) a concentrate, metabolite, constituent, extract or combination of any ingredient described in (A), (B), (C), (D), or (E) hereinabove. If desired, excipients may also be introduced into one or more of the receiving chambers of the multi-compartment capsules of the present invention in addition to the active ingredient(s). For example, in some cases involving medicaments with poor water solubility, it may be desirous to stabilize the liquids,

solids or dispersions using a lipid, lipoid, lecithin, ghee or the like. Still further by example, in some cases involving active ingredients or medicaments with poor bioavailability, bioequivalence, or other undesirous pharmaeceutical properties (*e.g.*, poor water solubility, pH lability, physical incompatibility, chemical incompatibility, macromolecular size and the like) such as proteins (*e.g.*, hormones, erythropoeitins, colony stimulating factors, interferons, interleukins, plasminogen activators, monoclonal antibodies, vaccines, plant proteins, such as soy and other therapeutic proteins) or other non-polar or weak-polar materials, it may be desirous to complement the active ingredient or medicament in liquid, solid or dispersion form using a fat, lipid, lipoid, lecithin, ghee, polymers, viral and bacterial vectors and the like.

* * * * *

It may be demonstrated that as medical and pharmacy knowledge has continued to expand exponentially, new medicaments, new classes of medicaments and new delivery technologies are becoming available for use in animals and humans who experience particular medical diseases, illnesses or conditions. A disease, illness, or condition may affect one or more organ systems in an animal or human. Organ systems may include, for example: (1) autonomic, (2) cardiovascular, (3) neurological, (4) gastro-intestinal, (5) respiratory, (6) renal system, (7) psychiatric, (8) endocrine, (9) gynecologic, (10) urologic, (11) immunologic, (12) bone and joint systems, (13) ear, nose, and throat, (14) dermatologic, (15) hematologic, (16) infectious defense and (17) nutrition and metabolism. In an animal or human who may be suffering from one disease, illness or condition, it is common to also be suffering from a disease, illness or condition affecting one or more of the other organ system(s). These concomitant diseases, illnesses or conditions occurring within a single animal or human are often labeled as "co-morbidities," a term often shortened and referred to as "co-morbid."

New medicaments and delivery technologies are providing patients and their health care practitioners with unprecedented therapeutic options in managing diseases, illnesses and conditions. In spite of this sophistication, there has been no effort to develop new

methods of using fixed combinations of medicaments for therapy of co-morbid diseases, illnesses or conditions. Moreover, there has been no effort to develop new methods of using fixed combinations of medicaments for management of a single disease, illness or condition affecting one or more organ system(s). The aforementioned fixed combinations may include a plurality of medicaments, which may be newly discovered and developed, or have been known for sometime or some combination of medicaments thereof. In any regard, said fixed combinations have not previously been contemplated in the art.

* * * * *

The following examples will illustrate the invention in further detail. It will be readily understood that the various active ingredients or medicaments that may be introduced into the receiving chambers of the multi-compartment capsules of the present invention, as generally described and illustrated in the Examples herein, are to be viewed as exemplary of the principles of the present invention, and not as restrictive to a particular structure or process for implementing those principles. Thus, the following more detailed description of the presently preferred embodiments of the methods, formulations, and compositions of the present invention, as represented in Examples I-XIV below, is not intended to limit the scope of the invention, as claimed, but is merely representative of presently preferred embodiments of the invention.

EXAMPLE I

[Glucosamine/Chondroitin (solid) & Vitamin E (liquid)]

As appreciated by those skilled in the art, arthritis is an inflammatory condition typically affecting the synovia membranes and cartilage of joints. It has been estimated that as many as one in three persons may experience symptoms associated with arthritis during their lifetime.

In addition to arthritis, various other chronic, debilitating conditions may afflict the aged. Many of these conditions result from the natural process of aging in humans. The natural aging process is partially due to the accumulation and effects of toxic free-radical

chemicals. Free-radicals result from several homeostatic biochemical processes. It is, accordingly, desirable to develop nutraceutical or dietary supplement products which may alleviate multiple chronic, debilitating conditions. It is also desirable to package and administer such products in the most economic and convenient possible fashion.

The administration of glucosamine, a naturally occurring substance in mucopoly-saccharides, mucoproteins and chitin, is believed to promote the production of cartilage components and the repair of damaged cartilage. Clinical findings support that fibroblast cells increased production of mucopolycaccharide and collagen synthesis when glucosamine was added.

Chondroitin sulfates are large polymers of glycosaminoglycans, primarily D-glucuronic acid and D-acetylgalactosamine, and disaccharides and may be derived from the cartilage of bovine trachea. The administration of chondroitin sulfate has been shown to promote the formation of new cartilage matrix. In particular, chondroitin stimulates the metabolism of chondrocyte cells and the production of collagen and proteoglycan.

Vitamin E, also known as alpha-tocopherol, is a well-known scavenger of free-radicals in the body. Free-radical scavengers are sometimes referred to as anti-oxidants. This scavenging process is important for detoxifying the body of chemicals which are known to promote apoptosis, or programmed cell death. Apoptosis is a scientific description of cellular destruction. Although vitamin E is a popular anti-oxidant, it is poorly soluble in water and thus can be administered only as a liquid-oil formulation or in an oil formulation enclosed in a soft elastic capsule.

In one presently preferred embodiment of the present invention, therapeutically effective amounts of glucosamine, chondroitin, and vitamin E (active ingredients) may be introduced into receiving chambers of a multi-compartment capsule wherein at least two of the active ingredients have physical states (*e.g.*, solid, liquid, gas or dispersion) that differ. Consistent with the foregoing, multi-compartment, multi-phase capsules and encapsulation technology are herein contemplated to produce a delivery vehicle for delivering anti-arthritic

and anti-oxidant compounds to the body in a single dosage. A capsular format of the present invention may include the following composition:

Primary Capsule:	
Glucosamine HCl	500 mg
[500-2000 mg/day]	
Chondroitin sulfate	400 mg
[400-1600 mg/day]	
Secondary Capsule:	
Vitamin E	200 IU
[200 - 400 IU/day]	

The incorporation of time-release coatings to varying the release rates of the active ingredients (*e.g.*, glucosamine HCl/chondroitin sulfate and vitamin E) in the primary and secondary capsules, respectively, of the multi-compartment capsule may be used to target key time intervals or events when the body may be most able to utilize the named active ingredients. Thus, the incorporation of time-release coatings in the encapsulation process when forming a multi-compartment capsule may be specifically designed to fit the needs and desires of numerous different users having similar conditions that are being targeted for treatment.

A therapeutically effective amount of glucosamine HCl/chondroitin sulfate may be introduced into at least a portion of the internal periphery of the receiving chambers of a primary capsule in the form of a solid and a therapeutically effective amount of vitamin E may be introduced into at least a portion of a secondary capsule in the form of a liquid, if desired. Since the encapsulation process and multi-compartment, multi-phase capsule of the present invention are configured to apply to an anticipated treatment regime or medicinal design of a single dosage capsule, it will be readily appreciated that the introduction of one or more active ingredients into the receiving chambers of the primary and secondary capsules,

respectively, is anticipated such that the various ingredients may be introduced in different receiving chambers to accommodate different treatment modalities. For example, a multi-compartment capsule may be formulated having glucosamine HCl and chondroitin sulfate introduced into the receiving chambers of the secondary capsule and vitamin E may be introduced into the receiving chamber of the primary capsule. It is intended, therefore, that the examples provided herein be viewed as exemplary of the principles of the present invention, and not as restrictive to a particular structure or method for implementing those principles.

EXAMPLE II

[S-adenosylmethione (SAMe) (solid) & Vitamin E (liquid)]

S-adenosylmethione (SAMe), may be derived from two materials: methionine, a sulfur-containing amino acid, and adenosine triphosphate (ATP), the body's main energy compound. SAMe was originally developed around 1950 as an antidepressant. Over the years, it has also been found that SAMe may assist in alleviating arthritic symptoms, assist in the manufacture of melatonin, which is needed to regulate sleep, help protect DNA from harmful mutations and prevent certain types of nerve damage.

As noted above, vitamin E is a popular anti-oxidant, but it is poorly soluble in water and therefore can be administered only as a liquid-oil formulation. Vitamin E is typically measured in international units (IU) of alpha tocopherol.

In one presently preferred embodiment of the present invention, therapeutically effective amounts of SAMe and vitamin E (active ingredients) may be introduced into receiving chambers of a multi-compartment capsule wherein SAMe comprises a physical state (*e.g.*, solid, liquid, gas or dispersion) different from the physical state of vitamin E. As shown in Figures 3 and 4, a therapeutically effective amount of SAMe may be introduced into receiving chamber 218a and a therapeutically effective amount of vitamin E may be introduced into receiving chamber 218b of a multi-compartment capsule 210 of the present invention. Consistent with the foregoing, multi-compartment, multi-phase capsules and encapsulation technology are herein contemplated to produce a delivery vehicle for

delivering mood enhancing, anti-arthritic and anti-oxidant compounds to the body in a single dosage. A capsular format of the present invention may include the following composition:

Receiving Chamber (218a):

S-adenosylmethione 1000 mg

[200-1600 mg/day]

Receiving Chamber (218b):

Vitamin E 200 IU

[200-400 IU/day]

The incorporation of time-release coatings to varying the release rates of the active ingredients (*e.g.*, SAMe and vitamin E) of the multi-compartment capsule 210 may be used to target key time intervals or events when the body may be most able to utilize the named active ingredients. Thus, the incorporation of time-release coatings in the encapsulation process when forming a multi-compartment capsule may be specifically designed to fit the needs and desires of numerous different users having similar conditions that are being targeted for treatment.

According to one presently preferred embodiment of the present invention, a therapeutically effective amount of SAMe may be introduced into at least a portion of the receiving chamber 218a in the form of a solid and a therapeutically effective amount of vitamin E may be introduced into at least a portion of the receiving chamber 218b of the primary capsule 211 in the form of a liquid.

In an alternative presently preferred embodiment of the present invention, therapeutically effective amounts of SAMe and vitamin E (active ingredients) may be introduced into receiving chambers of a multi-compartment capsule wherein SAMe comprises a physical state (*e.g.*, solid, liquid, gas or dispersion) different from the physical state of vitamin E. As shown in Figure 2, a therapeutically effective amount of SAMe, in the form of a solid, may be introduced into receiving chamber 118 and 138 and a therapeutically

effective amount of vitamin E, in the form of a liquid, may be introduced into receiving chamber 128 of a multi-compartment capsule 110 of the present invention. The material forming the primary capsule shell 111 may be formulated in a manner allowing for immediate dissolution and release of the of the contents of receiving chamber 118. The material forming the secondary capsule shell 120 may be formulated in a manner allowing for either an immediate dissolution or a time-delayed dissolution and release of the contents of receiving chamber 128. The material forming the tertiary capsule shell 138 may be formulated in a manner allowing for time-delayed dissolution and release of the contents of receiving chamber 138. In this presently preferred embodiment of the present invention, a total daily dosage of SAMe may be delivered as two separate dosages within a single oral dosage form. One presently preferred embodiment of the present invention thus makes for a more convenient dosage form.

Since the encapsulation process and multi-compartment, multi-phase capsule of the present invention are configured to apply to an anticipated treatment regime or medicinal design of a single dosage capsule, it will be readily appreciated that the introduction of one or more active ingredients into receiving chambers defined within a capsule is anticipated such that the various ingredients may be introduced in different receiving chambers to accommodate different treatment modalities. It is intended, therefore, that the examples provided herein be viewed as exemplary of the principles of the present invention, and not as restrictive to a particular structure or method for implementing those principles.

EXAMPLE III

[Curcumin, Holy Basil, Zinc (solid) & Fish Oil

(Omega 3 Fatty Acids DHA & EPA - liquid)]

Curcumin belongs to a class of compounds derived from the turmeric root and is a yellow-orange volatile oil. It is believed that curcumin has an inhibitory effect on carcinogenesis, which is the evolution of a normal cell into a cancerous cell. There is clinical evidence to suggest curcumin may help to prevent stomach, colon, oral, esophageal, breast and skin cancers. Additional studies have been conducted to show that curcumin may be

helpful in balancing cholesterol levels, protecting against ulcers by inhibition of gastric acid secretion and protection of gastric mucosal tissue, and anti-inflammatory actions. In one clinical study, curcumin was found to be as effective as non-steroidal anti-inflammatory drugs in the treatment of arthritis and post-operative pain.

The administration of Holy Basil (*Ocimum sanctum*) has been shown to have an effect on promoting peripherally mediated analgesic effects. This action allows a broad range of therapeutic effects, including, anti-inflammatory, hypoglycemia, analgesic, anti-ulcer and anti-septic properties.

As known, zinc is a mineral that occurs in animal and plant tissues and is an important co-factor for various enzyme reactions in the body, as well as being helpful for the reproduction system, and for the manufacture of body proteins. Zinc is also an antioxidant nutrient, similar to vitamin E. There is clinical data that suggests that zinc may be important to the prostate and other reproductive organs in the body, may help in the contractility of muscles, help stabilize blood, help maintain the body's alkaline balance and aid in the digestion and metabolism of phosphorus.

Over several decades considerable evidence has been collected to suggest that fish and fish oils are beneficial to the heart, mental health and in reducing cancer risk. The "active" components of fish oils are eicosapentaenoic acid (EPA), a polyunsaturated fatty acid with a 20 carbon chain, and docosahexaenoic acid (DHA), a polyunsaturated fatty acid with a 22 carbon chain. Both active components are members of the omega-3 group of essential fatty acids and are found exclusively in marine animals. The best sources for EPA and DHA may be fatty fish such as herring, sardines, salmon and fresh tuna.

The recommended daily intake of EPA plus DHA is between 650 to 1000 mg/day. Clinical trials have used anywhere from 1 g/day to 10 g/day, but little additional benefit has been observed at levels above 5 g/day of EPA and DHA combined. The onset of beneficial effects is variable. Effects on cholesterol may occur in just a few weeks, but it may take there (3) months or longer to see effects in degenerative diseases, such as arthritis.

In one presently preferred embodiment of the present invention, therapeutically effective amounts of curcumin, Holy Basil, zinc and fish oil (active ingredients) may be introduced into receiving chambers of a multi-compartment capsule wherein curcumin, Holy Basil and zinc comprise a physical state (*e.g.*, solid, liquid, gas or dispersion) different from the physical state of the fish oil. As shown in Figure 2, a therapeutically effective amount of curcumin may be introduced into receiving chamber 138 of a tertiary capsule 130, a therapeutically effective amount of Holy Basil and zinc may be introduced into receiving chamber 128 of a secondary capsule and a therapeutically effective amount of fish oil may be introduced into receiving chamber 118 of a primary capsule 111 of a multi-compartment capsule 110 of the present invention. Consistent with the foregoing, multi-compartment, multi-phase capsules and encapsulation technology are herein contemplated to produce a delivery vehicle for delivering anti-neoplastic, anti-inflammatory, analgesic and anti-oxidant compounds to the body in a single dosage. A capsular format of the present invention may include the following composition:

Tertiary Capsule (130):

Curcumin 400 mg

[1200-1800 mg/day; 400 mg three times daily]

Secondary Capsule (120):

Holy Basil 2.5 gms

[2.5 grams fresh dried leaf powder/day]

Zinc 15 mg

[4 - 15 mg/day]

Primary Capsule (111):

Fish oil 1000 mg

(Omega 3 fatty acids - DHA & EPA)

[650 - 1000 mg/day]

The incorporation of time-release coatings to varying the release rates of the active ingredients (*e.g.*, curcumin, Holy Basil, Zinc and fish oil) in the primary, secondary and tertiary capsules 111, 120, 130 of one presently preferred embodiment of a multi-compartment capsule 110 may be used to target key time intervals or events when the body may be most able to utilize the named active ingredients. Thus, the incorporation of time-release coatings in the encapsulation process when forming a multi-compartment capsule may be specifically designed to fit the needs and desires of numerous different users having similar conditions that are being targeted for treatment.

As contemplated herein, a therapeutically effective amount of curcumin may be introduced into at least a portion of the receiving chamber 138 of the tertiary capsule 130 in the form of a solid, a therapeutically effective amount of Holy Basil and zinc may be introduced into at least a portion of the receiving chamber 128 of the secondary capsule 120 in the form of a solid and a therapeutically effective amount of fish oil may be introduced into at least a portion of the primary capsule 111 in the form of a liquid. Since the encapsulation process and multi-compartment, multi-phase capsule of the present invention are configured to apply to an anticipated treatment regime or medicinal design of a single dosage capsule, it will be readily appreciated that the introduction of one or more active ingredients into the receiving chambers of the primary and secondary capsules, respectively, is anticipated such that the various ingredients may be introduced in different receiving chambers to accommodate different treatment modalities. It is intended, therefore, that the examples provided herein be viewed as exemplary of the principles of the present invention, and not as restrictive to a particular structure or method for implementing those principles.

EXAMPLE IV

[Vitamin C (solid) & Vitamin E (liquid)]

It is believed that vitamin C plays an important role as a component of enzymes involved in the synthesis of collagen and carnitine. A vital role of vitamin C, however, is believed to be that of the primary, water-soluble antioxidant in the human body . A daily

intake of 60-1000 mg of vitamin C may be adequate for preventive purposes, but far larger quantities may be required to have an effect on halting or reversing cancer and heart disease.

As noted above, vitamin E is a popular anti-oxidant, but it is poorly soluble in water and therefore can be administered only as a liquid-oil formulation.

In one presently preferred embodiment of the present invention, therapeutically effective amounts of vitamin C and vitamin E (active ingredients) may be introduced into receiving chambers of a multi-compartment capsule wherein vitamin C comprises a physical state (*e.g.*, solid, liquid, gas or dispersion) different from the physical state of vitamin E. Consistent with the foregoing, multi-compartment, multi-phase capsules and encapsulation technology are contemplated herein to produce a delivery vehicle for delivering anti-oxidant compounds to the body in a single dosage. A capsular format of the present invention may include the following composition:

Primary Capsule:

Vitamin C	500 mg
[60 - 1000 mg/day]	

Secondary Capsule:

Vitamin E	200 IU
[200-400 IU/day]	

The incorporation of time-release coatings to varying the release rates of the active ingredients (*e.g.*, vitamin C and vitamin E) in different receiving chambers of a multi-compartment capsule may be used to target key time intervals or events when the body may be most able to utilize the named active ingredients. Thus, the incorporation of time-release coatings in the encapsulation process when forming a multi-compartment capsule may be specifically designed to fit the needs and desires of numerous different users having similar conditions that are being targeted for treatment and is contemplated herein.

A therapeutically effective amount of vitamin C may be introduced into at least a portion of a first receiving chamber in the form of a solid and a therapeutically effective

amount of vitamin E may be introduced into at least a portion of a second receiving chamber in the form of a liquid. Since the encapsulation process and multi-compartment, multi-phase capsule of the present invention are configured to apply to an anticipated treatment regime or medicinal design of a single dosage capsule, it will be readily appreciated that the introduction of one or more active ingredients into the receiving chambers of the primary and secondary capsules, respectively, is anticipated such that the various ingredients may be introduced in different receiving chambers to accommodate different treatment modalities. It is intended, therefore, that the examples provided herein be viewed as exemplary of the principles of the present invention, and not as restrictive to a particular structure or method for implementing those principles.

EXAMPLE V

[Selenium/Vitamin C (solid) & Vitamin E,/Beta-Carotene/
Fish Oil (Omega 3 Fatty Acids DHA & EPA) (liquid)]

Selenium is an essential trace mineral in the human body and an important part of antioxidant enzymes that protect cells against the effects of free radicals that are produced during normal oxygen metabolism. As readily known in the art, the body has developed defenses, such as antioxidants, to assist in controlling levels of free radicals which can cause damage to cells and contribute to the development of some chronic diseases. It is also believed that Selenium is essential for normal functioning of the immune system and thyroid gland. The recommended dietary allowance for selenium is 55 mcg/day.

As noted above, it is believed that vitamin C plays an important role as a component of enzymes involved in the synthesis of collagen and carnitine and a vital role as a water-soluble antioxidant in the human body. Vitamin E is another important anti-oxidant.

Beta-carotene is a substance found in plants that the body converts into vitamin A. It is believed that beta-carotene acts as an antioxidant and an immune system booster. There is no RDA for beta-carotene. The most common beta-carotene supplement intake is about 25,000 IU (15 mg) per day, however supplementation with as much as 100,000 IU (60 mg) per day has been reported.

It has been suggested that fish and fish oils are beneficial to the heart, mental health and in reducing cancer risk. The recommended daily intake of EPA plus DHA (the active components of fish oil) is between 650 to 1000 mg/day. Clinical trials have used anywhere from 1 g/day to 10 g/day, but little additional benefit has been observed at levels above 5 g/day of EPA and DHA combined.

In one presently preferred embodiment of the present invention, therapeutically effective amounts of selenium, vitamin C, beta-carotene, vitamin E and fish oil (active ingredients) may be introduced into receiving chambers of a multi-compartment capsule wherein selenium and vitamin C comprise a physical state (*e.g.*, solid, liquid, gas or dispersion) different from the physical state of vitamin E, beta-carotene and fish oil (omega 3 fatty acids DHA & EPA). Specifically, a therapeutically effective amount of selenium and vitamin C may be introduced into one or more receiving chambers of a primary capsule and a therapeutically effective amount of vitamin E, beta-carotene and fish oil (omega 3 fatty acids DHA & EPA) may be introduced into one or more receiving chambers of a secondary capsule to form a multi-compartment capsule of the present invention. Consistent with the foregoing, multi-compartment, multi-phase capsules and encapsulation technology are herein contemplated to produce a delivery vehicle for delivering anti-oxidant compounds to the body in a single dosage. A capsular format of the present invention may include the following composition:

Primary Capsule:

Selenium [50 - 100 mcg/day]	50 mcg
Vitamin C [60-1000 mg/day]	500 mg

Secondary Capsule:

Beta-carotene [30 - 300 mg/day]	50 mg
Vitamin E [200-400 IU/day]	200 IU

Fish oil (Omega 3 fatty acids - DHA & EPA)	1000 mg
[650 - 1000 mg/day]	

The incorporation of time-release coatings to varying the release rates of the active ingredients (*e.g.*, selenium, vitamin C , vitamin E, beta carotene and fish oil) in different receiving chambers of a multi-compartment capsule may be used to target key time intervals or events when the body may be most able to utilize the named active ingredients. Thus, the incorporation of time-release coatings in the encapsulation process when forming a multi-compartment capsule may be specifically designed to fit the needs and desires of numerous different users having similar conditions that are being targeted for treatment and is contemplated herein.

A therapeutically effective amount of selenium and vitamin C may be introduced into one or more receiving chambers of a primary capsule in solid form and a therapeutically effective amount of vitamin E, beta carotene and fish oil may be introduced into one or more receiving chambers of a secondary capsule in the form of a liquid. Since the encapsulation process and multi-compartment, multi-phase capsule of the present invention are configured to apply to an anticipated treatment regime or medicinal design of a single dosage capsule, it will be readily appreciated that the introduction of one or more active ingredients into the receiving chambers of the primary and secondary capsules, respectively, is anticipated such that the various ingredients may be introduced in different receiving chambers to accommodate different treatment modalities. It is intended, therefore, that the examples provided herein be viewed as exemplary of the principles of the present invention, and not as restrictive to a particular structure or method for implementing those principles.

EXAMPLE VI

[Fluoxetine (solid), S-adenosylmethione (SAMe) (solid) & Vitamin E (liquid)]

As appreciated by those skilled in the art, depression is a mental state characterized by excessive sadness. Depression is one of several forms of mood disorders. Activity in those

affected with depression may be agitated and restless or slow and retarded. Those affected may also show pessimistic or despairing behavior and may have disturbances in sleep, appetite and concentration. Depression is often a co-morbid condition with other chronic disease states involving the neurological system, cardiovascular system, respiratory system, endocrine system, musculoskeletal system, immune system, genitourinary system and the like. This list is should not be considered exclusive.

Administration of Fluoxetine is known by those of skill in the art to alleviate the signs and symptoms of depression. Fluoxetine belongs to a class of compounds which are given the functional name: selective serotonin re-uptake inhibitors (SSRI's). This class may include, for example: fluoxetine (PROZAC®), sertraline (ZOLOFT®), paroxetine (PAXIL ®), fluvoxamine (LUVOX®), citalopram (CELEXA®) and escitalopram (LEXAPRO®). As appreciated, the foregoing list is provided herein as exemplary and should not be considered exclusive or exhaustive.

Fluoxetine is a bicyclic compound, similar in structure to phenylpropanolamine. Fluoxetine structure imparts a high selectivity for interaction with cells of the nervous system for the function of preventing the re-uptake of serotonin into pre-synaptic cell storage sites. This action leads to marked increases in synaptic concentration of serotonin and is facilitative of numerous physiological processes requiring serotonin neurotransmission. In the pharmaeceutical field Fluoxetine is available as a hydrochloride salt (HCl).

S-adenosylmethione (SAMe), is derived from two materials: methionine, a sulfur-containing amino acid, and adenosine triphosphate (ATP), the body's main energy compound. SAMe was originally developed around 1950 as an antidepressant, but it was also found to be helpful in the alleviation of arthritic symptoms. SAMe is essential for the manufacture of melatonin, which is needed to regulate sleep. It also helps to protect DNA from harmful mutations and may help prevent certain types of nerve damage. Current clinical research is beginning to confirm these antidepressant qualities of SAMe.

Vitamin E, also named alpha-tocopherol, is a well-known scavenger of free-radicals in the body. Free-radical scavengers are sometimes referred to as anti-oxidants. This

scavenging process is important for detoxifying the body of chemicals which are known to promote apoptosis, or programmed cell death. Apoptosis is a scientific description of cellular destruction. Although it is a popular anti-oxidant, Vitamin E is poorly soluble in water and thus can be administered only as a liquid-oil formulation or in an oil formulation enclosed in a soft elastic capsule. Vitamin E is typically measured in international units (IU) of alpha tocopherol.

In one presently preferred embodiment of the present invention, therapeutically effective amounts of Fluoxetine, SAMe and Vitamin E (active ingredients) may be introduced into receiving chambers of a multi-compartment capsule wherein Fluoxetine and SAMe comprises a physical state (*e.g.*, solid, liquid, gas or dispersion) different from the physical state of Vitamin E. As shown in Figures 3 and 4, a therapeutically effective amount of Fluoxetine and SAMe may be introduced into receiving chamber 218a and a therapeutically effective amount of Vitamin E may be introduced into receiving chamber 218b of a multi-compartment capsule 210 of the present invention. Consistent with the foregoing, multi-compartment, multi-phase capsules and encapsulation technology are herein contemplated to produce a delivery vehicle for delivering mood enhancing, anti-depressant and anti-oxidant compounds to the body in a single dosage. A capsular format of the present invention may include the following composition:

Receiving Chamber (218a):

Fluoxetine [20 - 60 mg/day]	20 mg
S-adenosylmethione [200-1600 mg/day]	1000 mg

Receiving Chamber (218b):

Vitamin E [200-400 IU/day]	200 IU

The incorporation of time-release coatings to varying the release rates of the active ingredients (*e.g.*, Fluoxetine/SAMe and Vitamin E) in the primary and secondary capsules, respectively, of the multi-compartment capsule may be used to target key time intervals or events when the body may be most able to utilize the named active ingredients. Thus, the incorporation of time-release coatings in the encapsulation process when forming a multi-compartment capsule may be specifically designed to fit the needs and desires of numerous different users having similar conditions that are being targeted for treatment.

According to one presently preferred embodiment of the present invention, a therapeutically effective amount of Fluoxetine and SAMe may be introduced into at least a portion of the receiving chamber 218a in the form of a solid and a therapeutically effective amount of Vitamin E may be introduced into at least a portion of the receiving chamber 218b of the primary capsule 211 in the form of a liquid.

In an alternative presently preferred embodiment of the present invention, therapeutically effective amounts of Fluoxetine and SAMe and Vitamin E (active ingredients) may be introduced into receiving chambers of a multi-compartment capsule wherein Fluoxetine and SAMe comprises a physical state (*e.g.*, solid, liquid, gas or dispersion) different from the physical state of Vitamin E. As shown in Figure 2, a therapeutically effective amount of Fluoxetine and SAMe, in the form of a solid, may be introduced into receiving chamber 118 and 138 and a therapeutically effective amount of Vitamin E, in the form of a liquid, may be introduced into receiving chamber 128 of a multi-compartment capsule 110 of the present invention. The material forming the primary capsule shell 111 may be formulated in a manner allowing for immediate dissolution and release of the of the contents of receiving chamber 118. The material forming the secondary capsule shell 120 may be formulated in a manner allowing for either an immediate dissolution or a time-delayed dissolution and release of the contents of receiving chamber 128. The material forming the tertiary capsule shell 138 may be formulated in a manner allowing for time-delayed dissolution and release of the contents of receiving chamber 138. In this

presently preferred embodiment of the present invention, a total daily dosage of Fluoxetine and SAMe may be delivered as two separate dosages within a single oral dosage form. One presently preferred embodiment of the present invention thus makes for a more convenient dosage form.

Since the encapsulation process and multi-compartment, multi-phase capsule of the present invention are configured to apply to an anticipated treatment regime or medicinal design of a single dosage capsule, it will be readily appreciated that the introduction of one or more active ingredients into the receiving chambers of the primary and secondary capsules, respectively, is anticipated such that the various ingredients may be introduced in different receiving chambers to accommodate different treatment modalities. For example, a multi-compartment capsule may be formulated having Fluoxetine and SAMe introduced into the receiving chambers of the secondary capsule and Vitamin E may be introduced into the receiving chamber of the primary capsule. It is intended, therefore, that the examples provided herein be viewed as exemplary of the principles of the present invention, and not as restrictive to a particular structure or method for implementing those principles.

EXAMPLE VII

[Rofecoxib (solid) & Vitamin E (liquid)]

As appreciated by those skilled in the art, arthritis is an inflammatory condition typically affecting the synovia and cartilage of joints. It has been estimated that as many as one in three persons may experience symptoms associated with arthritis during their lifetime.

In addition to arthritis, various other chronic, debilitating conditions may afflict the aged. Many of these conditions result from the natural process of aging in humans. The natural aging process is partially due to the accumulation and effects of toxic free-radical chemicals. Free-radicals result from several homeostatic biochemical processes. It is, accordingly, desirable to develop pharmaeceutical, biotechnical, nutraceutical or dietary supplement products which may alleviate multiple chronic, debilitating conditions. It is also desirable to package and administer such products in the most economic and convenient possible fashion.

Anti-inflammatory agents may have many diverse therapeutic roles in the human body. Inflammation is the process undertaken by the body as it responds to an injury. A typical inflammatory response involves blood vessel dilation, increased blood flow to the site of injury, and influx of white blood cells to process and remove dead tissue. Inflammation can lead to pain and swelling at the site of injury. Medicaments used in modulating the inflammatory response may be divided into steroid and non-steroidal labels. The latter is more commonly identified as non-steroidal anti-inflammatory drugs (NSAIDs).

Rofecoxib belongs to a class of NSAID compounds given the functional name cyclo-oxygenase-2 ("COX-2") inhibitors. This class may include, for example: rofecoxib (VIOXX®), celecoxib (CELEBREX®), valdecoxib (BEXTRA®), and meloxicam (MOBIC®). As appreciated, the foregoing list is provided herein as exemplary and should not be considered exclusive or exhaustive.

Rofecoxib is presently believed to inhibit the action of COX-2, an enzyme involved in the production of prostaglandins in the human body. Prostaglandins serve many diverse roles, one of which is to stimulate an inflammation mechanism in immune responses. Recently, Rofecoxib was labeled for use in the treatment of osteoarthritis, rheumatoid arthritis, acute pain, and primary dysmenorrhea.

Vitamin E, also named alpha-tocopherol, is a well-known scavenger of free-radicals in the body. Free-radical scavengers are sometimes referred to as anti-oxidants. This scavenging process is important for detoxifying the body of chemicals which are known to promote apoptosis, or programmed cell death. Apoptosis is a scientific description of cellular destruction. Although it is a popular anti-oxidant, Vitamin E is poorly soluble in water and thus can be administered only as a liquid-oil formulation or in an oil formulation enclosed in a soft elastic capsule.

In one presently preferred embodiment of the present invention, therapeutically effective amounts of Rofecoxib and Vitamin E (active ingredients) may be introduced into receiving chambers of a multi-compartment capsule wherein Rofecoxib comprises a physical state (*e.g.*, solid, liquid, gas or dispersion) different from the physical state of Vitamin E. As

shown in Figures 3 and 4, a therapeutically effective amount of Rofecoxib may be introduced into receiving chamber 218a and a therapeutically effective amount of Vitamin E may be introduced into receiving chamber 218b of a multi-compartment capsule 210 of the present invention. Consistent with the foregoing, multi-compartment, multi-phase capsules and encapsulation technology are herein contemplated to produce a delivery vehicle for delivering anti-inflammatory and anti-oxidant compounds to the body in a single dosage. A capsular format of the present invention may include the following composition:

Receiving Chamber (218a):

Rofecoxib 25 mg

[12.5 - 25 mg/day]

Receiving Chamber (218b):

Vitamin E 200 IU

[200-400 IU/day]

The incorporation of time-release coatings to varying the release rates of the active ingredients (*e.g.*, Rofecoxib and Vitamin E) of the multi-compartment capsule 210 may be used to target key time intervals or events when the body may be most able to utilize the named active ingredients. Thus, the incorporation of time-release coatings in the encapsulation process when forming a multi-compartment capsule may be specifically designed to fit the needs and desires of numerous different users having similar conditions that are being targeted for treatment.

According to one presently preferred embodiment of the present invention, a therapeutically effective amount of Rofecoxib may be introduced into at least a portion of the receiving chamber 218a in the form of a solid and a therapeutically effective amount of Vitamin E may be introduced into at least a portion of the receiving chamber 218b of the primary capsule 211 in the form of a liquid.

In an alternative presently preferred embodiment of the present invention, therapeutically effective amounts of Rofecoxib and Vitamin E (active ingredients) may be introduced into receiving chambers of a multi-compartment capsule wherein Rofecoxib comprises a physical state (*e.g.*, solid, liquid, gas or dispersion) different from the physical state of Vitamin E. As shown in Figure 2, a therapeutically effective amount of Rofecoxib, in the form of a solid, may be introduced into receiving chamber 118 and 138 and a therapeutically effective amount of Vitamin E, in the form of a liquid, may be introduced into receiving chamber 128 of a multi-compartment capsule 110 of the present invention. The material forming the primary capsule shell 111 may be formulated in a manner allowing for immediate dissolution and release of the of the contents of receiving chamber 118. The material forming the secondary capsule shell 120 may be formulated in a manner allowing for either an immediate dissolution or a time-delayed dissolution and release of the contents of receiving chamber 128. The material forming the tertiary capsule shell 138 may be formulated in a manner allowing for time-delayed dissolution and release of the contents of receiving chamber 138. In this presently preferred embodiment of the present invention, a total daily dosage of Rofecoxib may be delivered as two separate dosages within a single oral dosage form. One presently preferred embodiment of the present invention thus makes for a more convenient dosage form.

Since the encapsulation process and multi-compartment, multi-phase capsule of the present invention are configured to apply to an anticipated treatment regime or medicinal design of a single dosage capsule, it will be readily appreciated that the introduction of one or more active ingredients into receiving chambers defined within a capsule is anticipated such that the various ingredients may be introduced in different receiving chambers to accommodate different treatment modalities. It is intended, therefore, that the examples provided herein be viewed as exemplary of the principles of the present invention, and not as restrictive to a particular structure or method for implementing those principles.

EXAMPLE VIII

[Diphenhydramine Hydrochloride (solid) & Vitamin E (liquid)]

As appreciated by those skilled in the art, allergic reactions are conditions wherein the immune system is stimulated to identify, segregate and dispose of exogenous chemicals which cannot be recognized by the body. Allergic reactions are often associated with the release of histamine, a chemical compound which produces changes in the permeability of blood vessels and the accumulation of other immune system cells. In some circumstances, it may be desirable to modulate the amount of allergic response that is capable of being generated by the immune system.

Diphenhydramine belongs to a class of compounds which are given the functional name: histamine-1 (H_1) receptor antagonists. These compounds are more generally labeled as antihistamines. These antagonists are further divided according to their chemical structures. Diphenhydramine is an ethanolamine (aminoalkyl ether) derivative. Other chemical divisions may include, for example: ethylenediamine, propylamine, phenothiazine, piperazine. The ethanolamine division may include, for example: diphenhydramine, clemastine, dimenhydrinate, and doxylamine. As appreciated, the foregoing list is provided herein as exemplary and should not be considered exclusive or exhaustive.

Antihistamines block the interaction of the neurotransmitter, histamine, with H_1 receptors located in smooth muscle linings of the gastrointestinal tract, bronchial tract and large blood vessels. This blocking action may lead to marked relaxation in smooth muscle tone and is facilitative of numerous physiological processes including respiration.

The H_1 antagonists may also be divided according to their selectivity for central and peripheral H_1 receptors. A second-generation of H_1 has emerged in recent years. These agents have a greater selectivity for peripheral H_1 receptors. Second-generation H_1 receptor antagonists may include, for example: azelastine (ASTELIN®), cetirizine (ZYRTEC®), desloratadine (CLARINEX®), fexofenadine (ALLEGRA®) and loratadine (CLARITINn®).

Vitamin E, also named alpha-tocopherol, is a well-known scavenger of free-radicals in the body. Free-radical scavengers are sometimes referred to as anti-oxidants. This

scavenging process is important for detoxifying the body of chemicals which are known to promote apoptosis, or programmed cell death. Apoptosis is a scientific description of cellular destruction. Although it is a popular anti-oxidant, Vitamin E is poorly soluble in water and thus can be administered only as a liquid-oil formulation or in an oil formulation enclosed in a soft elastic capsule.

In one presently preferred embodiment of the present invention, therapeutically effective amounts of Diphenhydramine and Vitamin E (active ingredients) may be introduced into receiving chambers of a multi-compartment capsule wherein at least two of the active ingredients have physical states (*e.g.*, solid, liquid, gas or dispersion) that differ. Consistent with the foregoing, multi-compartment, multi-phase capsules and encapsulation technology are herein contemplated to produce a delivery vehicle for delivering anti-allergic and anti-oxidant compounds to the body in a single dosage. A capsular format of the present invention may include the following composition:

Primary Capsule:

Diphenhydramine HCl	50 mg
[25 - 100 mg/day]	

Secondary Capsule:

Vitamin E	200 IU
[200-400 IU/day]	

The incorporation of time-release coatings to varying the release rates of the active ingredients (*e.g.*, Diphenhydramine and Vitamin E) in the primary and secondary capsules, respectively, of the multi-compartment capsule may be used to target key time intervals or events when the body may be most able to utilize the named active ingredients. Thus, the incorporation of time-release coatings in the encapsulation process when forming a multi-compartment capsule may be specifically designed to fit the needs and desires of numerous different users having similar conditions that are being targeted for treatment.

A therapeutically effective amount of Diphenhydramine may be introduced into at least a portion of the internal periphery of the receiving chambers of a primary capsule in the form of a solid and a therapeutically effective amount of Vitamin E may be introduced into at least a portion of a secondary capsule in the form of a liquid, if desired. Since the encapsulation process and multi-compartment, multi-phase capsule of the present invention are configured to apply to an anticipated treatment regime or medicinal design of a single dosage capsule, it will be readily appreciated that the introduction of one or more active ingredients into the receiving chambers of the primary and secondary capsules, respectively, is anticipated such that the various ingredients may be introduced in different receiving chambers to accommodate different treatment modalities. For example, a multi-compartment capsule may be formulated having Diphenhydramine introduced into the receiving chambers of the secondary capsule and Vitamin E may be introduced into the receiving chamber of the primary capsule. It is intended, therefore, that the examples provided herein be viewed as exemplary of the principles of the present invention, and not as restrictive to a particular structure or method for implementing those principles.

EXAMPLE IX

[Celecoxib (solid) & Ibuprofen (liquid)]

As appreciated by those skilled in the art, arthritis is an inflammatory condition typically affecting the synovia and cartilage of joints. It has been estimated that as many as one in three persons may experience symptoms associated with arthritis during their lifetime.

Anti-inflammatory agents may have many diverse therapeutic roles in the human body. Inflammation is the process undertaken by the body as it responds to an injury. A typical inflammatory response involves blood vessel dilation, increased blood flow to the site of injury, and influx of white blood cells to process and remove dead tissue. Inflammation can lead to pain and swelling at the site of injury. Medicaments used in modulating the inflammatory response may be divided into steroid and non-steroidal labels. The latter is more commonly identified as non-steroidal anti-inflammatory drugs (NSAIDs).

Celecoxib belongs to a class of NSAID compounds given the functional name cyclo-oxygenase-2 ("COX-2") inhibitors. This class may include, for example: rofecoxib (VIOXX®), celecoxib (CELEBREX®), valdecoxib (BEXTRA®), etodolac (LODINE®) and meloxicam (MOBIC®). As appreciated, the foregoing list is provided herein as exemplary and should not be considered exclusive or exhaustive.

Celecoxib is believed to inhibit the action of COX-2, an enzyme involved in the production of prostaglandins in the human body. Prostaglandins serve many diverse roles, one of which is to stimulate an inflammation mechanism in immune responses. Recently, Celecoxib was labeled by the United States Food and Drug Administration (FDA) for use in the treatment of osteoarthritis, rheumatoid arthritis, acute pain, and primary dysmenorrhea.

Ibuprofen is another NSAID and is believed to function as a non-selective inhibitor of cyclo-oxygenase. Ibuprofen has been labeled by the FDA for use in the treatment of osteoarthritis, rheumatoid arthritis, relief of mild to moderate pain and primary dysmenorrhea. Ibuprofen belongs to a class of compounds called phenyl-a-methylacetic acids, which are derived from salicylic acid. Non-selective cyclo-oxygenase inhibitors may include, for example: ibuprofen (MOTRIN®), naproxen (NAPROSYN®), diclofenac (VOLTAREN®), flurbiprofen (ANSAID®), indomethacin (INDOCIN®), ketoprofen (ORUDIS®), ketorolac (TORADOL®), nabumetone (RELAFEN®), oxaprozin (DAYPRO®), piroxicam (FELDENE ®) and sulindac (CLINORIL®). As appreciated, the foregoing list is provided herein as exemplary and should not be considered exclusive or exhaustive.

In one presently preferred embodiment of the present invention, therapeutically effective amounts of Celecoxib and Ibuprofen (active ingredients) may be introduced into receiving chambers of a multi-compartment capsule wherein Celecoxib comprises a physical state (*e.g.*, solid, liquid, gas or dispersion) different from the physical state of Ibuprofen. As shown in Figures 3 and 4, a therapeutically effective amount of Celecoxib may be introduced into receiving chamber 218a and a therapeutically effective amount of Ibuprofen may be introduced into receiving chamber 218b of a multi-compartment capsule 210 of the present

invention. Consistent with the foregoing, multi-compartment, multi-phase capsules and encapsulation technology are herein contemplated to produce a delivery vehicle for delivering anti-arthritic and anti-oxidant compounds to the body in a single dosage. A capsular format of the present invention may include the following composition:

Receiving Chamber (218a):

Celecoxib	200 mg
[200 - 400 mg/day]	

Receiving Chamber (218b):

Ibuprofen	800 mg
[2400 - 3200 mg/day]	

The incorporation of time-release coatings to varying the release rates of the active ingredients (*e.g.*, Celecoxib and Ibuprofen) of the multi-compartment capsule 210 may be used to target key time intervals or events when the body may be most able to utilize the named active ingredients. Thus, the incorporation of time-release coatings in the encapsulation process when forming a multi-compartment capsule may be specifically designed to fit the needs and desires of numerous different users having similar conditions that are being targeted for treatment.

According to one presently preferred embodiment of the present invention, a therapeutically effective amount of Celecoxib may be introduced into at least a portion of the receiving chamber 218a in the form of a solid and a therapeutically effective amount of Ibuprofen may be introduced into at least a portion of the receiving chamber 218b of the primary capsule 211 in the form of a liquid.

In an alternative presently preferred embodiment of the present invention, therapeutically effective amounts of Celecoxib and Ibuprofen (active ingredients) may be introduced into receiving chambers of a multi-compartment capsule wherein Celecoxib comprises a physical state (*e.g.*, solid, liquid, gas or dispersion) different from the physical

state of Ibuprofen. As shown in Figure 2, a therapeutically effective amount of Celecoxib, in the form of a solid, may be introduced into receiving chamber 128 and a therapeutically effective amount of Ibuprofen, in the form of a liquid, may be introduced into receiving chambers 118 and 138 of a multi-compartment capsule 110 of the present invention.

The material forming the primary capsule shell 111 may be formulated in a manner allowing for immediate dissolution and release of the of the contents of receiving chamber 118. The material forming the secondary capsule shell 120 may be formulated in a manner allowing for either an immediate dissolution or a time-delayed dissolution and release of the contents of receiving chamber 128. The material forming the tertiary capsule shell 138 may be formulated in a manner allowing for time-delayed dissolution and release of the contents of receiving chamber 138. In this presently preferred embodiment of the present invention, a total daily dosage of Ibuprofen may be delivered as two separate dosages within a single oral dosage form. One presently preferred embodiment of the present invention thus makes for a more convenient dosage form.

Since the encapsulation process and multi-compartment, multi-phase capsule of the present invention are configured to apply to an anticipated treatment regime or medicinal design of a single dosage capsule, it will be readily appreciated that the introduction of one or more active ingredients into receiving chambers defined within a capsule is anticipated such that the various ingredients may be introduced in different receiving chambers to accommodate different treatment modalities. It is intended, therefore, that the examples provided herein be viewed as exemplary of the principles of the present invention, and not as restrictive to a particular structure or method for implementing those principles.

EXAMPLES X

Some embodiments of the present invention will use one or more of the below ingredients in a multi-compartment capsule, combinable as would be recognized in view of the teachings of the present application in combination with the knowledge available to one of ordinary skill in the art. It is noted that the following non-limiting lists illustrate

exemplary ingredeints that can be used with the present invention, including the the broader subclasses and classes to which they belong.

Botanicals

Acerola Extracts
Algae, Blue Green
Amla
Bacopa Monnieri
Anise Seed
Artichoke
Astragalus
Barberry
Barley Sprout Extract
Bilberry
Bitter Melon
Black Cohosh
Black Walnut
Blue Cohosh
Boswellia
Broccoli
Butcher's Broom
Capsicum
Cat's Claw
Celery Seed
Chamomile
Chaste Berry
Chinese Herbs
Chlorophyll
Cocoa
Corn Silk
Curcuminoids
Dandelion
Diosgenin
Echinacea
Elecampane Root
Essential Oils
Evening Primrose
Fennel
Feverfew
Fo Ti
Garlic
Ginger
Ginseng (American)
Ginseng (Siberian)
Gotu Kola
Grape Skin Extract
Green Food Products
Alfalfa
Aloe
Angelica Root
Mucuna Pruriens
Arnica
Ashwagandha
Ayurvedic Herbs
Barley Grass
Benzoin
Bioflavonoids
Bitter Orange
Black Currant
Bladderwrack
Blueberry
Brahmi
Burdock
Calendula
Cascara Sagrada
Cayenne
Certified Organic Herbs
Chapparal
Chicory Root
Chlorella
Citrus Aurantium
Coriander
Cranberry
Damiana
Devil's Claw
Dong Quai
Elderberry
Ephedra
Eucalyptus
Eyebright
Fenugreek
Flax Products
Garcinia Cambogia
Gentian
Ginkgo Biloba
Ginseng (Panax)
Goldenseal
Grape Seed Extract
Grapefruit Seed Extract
Green Lipped Mussel Powder

Green Tea
Guarana
Gymnema Sylvestre
Henna
Herbal Teas
Horehound
Horsetail
Ipriflavone
Juniper Berries
Kelp Extract
Kombucha
Larch
Lemon Balm
Linden Flowers
Maca
Marshmallow
Molasses
Neem
Noni
Oatstraw
Olive Extract
Oregano Oil
Organic Sweeteners
Passion Flower
Pennyroyal
Pfaffia Paniculata
Piper Longum
Quercitin
Red Clover
Reishi Mushroom
Rhubarb Root
Rose Hips
Sage
Saw Palmetto
Seaweed extracts
Shatavari
Silymarin
Slippery Elm
Soybean Products
St. John's Wort
Summa
Terminalia Ajruna
Triphala
Uva Ursi
Vegetable Extracts
Wheat Germ
Wild Cherry bark
Witch Hazel
Yarrow
Yerba Sante
Griffonia Simplicifolia
Guggul
Hawthorne
Herbal Extracts, Standardized
Hops
Horse Chestnut
Hysop
Jojoba Oil
Kava Kava
Kola Nut
Kudzu
Lavender
Licorice Extract
Lobelia
Maitake Mushroom
Milk Thistle
Mushrooms
Nettle
Nopal
Octacosanol
Orange Peel Extract
Oregon Mountain Grape
Parsley
Pau d'Arco
Peppermint
Pine Bark Extract
Pygeum Africanum
Raspberry Powder
Red Raspberry
Resveratrol Extract
Rice Products
Rosemary Extract
Sarsaparilla
Schizandra
Senna
Shiitake Mushroom
Skullcap
Soy Isoflavones
Spirulina
Stevia
Tea Tree Oil
Tribulus Terrestris
Tumeric
Valerian Extract
Vitex
White Willow Bark
Wild Yam
Wormwood
Yellow Dock
Yohimbine

Yucca

Extracts

20-ECD 7-9%
Acetyl L-Carnitine HCl 99%
Alisma Extract 10:1
Angelica Root Extract
Artemisia Extract 4:1
Asparagus Extract 4:1
Astragulus Extract 10:1
Astragulus Extract 5:1
Astragulus Root Powder
Avena Sativa Extract 10:1
Barbed Skullcap Extract 10:1
Bee Pollen Powder
Bilberry Extract 10:1
Black Cohosh Extract 2.5%
Black Pepper Extract 4:1
Bone Powder
Broccoli Sprout Extract 10:1
Buplerum (Chai Hu) Extract 5:1
Cabbage Extract 4:1
Caffeine 99%
Calcium-Pyruvate 99%
Cassia Nomame Extract 4:1
Cat's Claw (Inner Bark) Powder
Celandine (Greater) Extract 4:1
Cetyl Myristoleate 11%
Chaenomeles Extract 4:1
Chamomile Flower Extract 4:1
Chitin
Chitosan 90%
Chrysin 99%
Cistanches Extract 5:1
Citrus Bioflavonoid Complex 13%
Clove Extract 5:1
Coca Extract 4:1
Colostrum
Cordyceps Extract 7%
Cornsilk Powder
Cranberry Extract 4:1
Curcumin Extract 95%
Damiana Extract 4:1
Dandelion Powder
Danshen Extract 80%
Devil's Claw Extract 2.5%
Devil's Claw Root Powder
Diosgenin 95%
4-Androstenedione 99%
Adenophora Tetraohylla Ext 5:1
Alpha Lipoic Acid 99%
Arbutin 99%
Artichoke Extract 5%, Globe
Asparagus Powder
Astragulus Extract 4:1
Astragulus Root Extract 0.5%
Atractylodes Extract 10:1
Avena Sativa Extract 4:1
Barberry Extract 10%
Beta-Sisterol 35%
Bitter Melon Extract 8:1
Black Cohosh Root Powder
Black Soy Bean Extract 10:1
Boswellia Serrata Extract 65%
Buchu Leaf Powder
Burdock Root Extract 4:1
Caffeine (Natural) 86-87%
Calcium Citrate Granular 21%
Carrot Root Extract 4:1
Catnip Extract 4:1
Cauliflower Extract 4:1
Celery Seed Extract
Cetyl Myristoleate 20%
Chamomile Flower Extract 10:1
ChasteTree Berry Extract 4:1
Chitosan 80%
Chondroitin Sulfate 90%
Cinnamon Powder
Citrus Aurantium Extract 6%
Citrus Peel Extract 5:1
Clove Powder
Codonopsis Pilosula Extract 5:1
Common Peony Extract 8:1
Cornsilk Extract 4:1
Corydalis Extract 10:1
Cranberry Powder
Cuscuta Extract 5:1
Damiana Leaves Powder
Dandelion Root Extract 6:1
D-Calcium Pantothenate
Devil's Claw Extract 4:1
DHEA 99%
DL-Phenyl Alanine

DMAE Bitartrate
Dong Quai Extract 4:1
D-Ribose
Echinacea Leaf Powder
Echinacea Purpurea Extract 4%
Echinacea Purpurea Root Powder
Elderberry Extract 20:1
Epimedium Extract 10%
Epimedium Extract 4:1
Epimedium Powder
Fennel Seed Extract 4:1
Fenugreek Extract 4:1
Feverfew Extract 5:1
Fish Oil Powder
Forskolin 8%
Fo-Ti Extract 8:1
Gardenia Extract 8:1
Garlic Powder
Ginger Extract 4:1
Ginger Root Powder
Ginkgo Extract 24/6%
Ginkgo Extract 24/7%
Ginkgo Leaf Powder
Ginseng (Panax) Extract 5%
Ginseng (Panax) Extract 80%
Glucosamine HCl 95% Granulation
Glucsosamine Sulfate Potassium
Glucsosamine Sulfate Sodium 99%
Goldenrod Powder
Goldenseal Root Powder
Gotu Kola Extract 4:1
Gotu Kola Powder
Grape Seed
Grape Seed Extract 20:1
Grape Seed Extract 5:1
Grape Seed Powder
Grape Skin Extract 4:1
Green Lip Mussel Extract
Green Tea Extract 4:1
Guarana Seed Extract 10%
Guarana Seed Extract 25%
Guggul Extract 2.5%
Gymnema Sylvestre Extract 25%
Hawthorne Berry Extract 4:1
Hawthorne Leaf Extract 2%
Hesperidin Extract 98%
Hops Flower Extract 4:1
Horehound Extract 4:1
Horse Chestnut Extract 20%
Horse Chestnut Powder
Dong Quai Extract 10:1
Dong Quai Root Powder
Echinacea Angustifolia Extract 4:1
Echinacea Purpurea Extract 10:1
Echinacea Purpurea Extract 4:1
Elder Flower Extract 4:1
Elderberry Extract 4:1
Epimedium Extract 10:1
Epimedium Extract 5%
Eucommia (Du Zhong) Extract 5:1
Fennel Seed Powder
Fenugreek Extract 6:1
Fisetin
Forbidden Palace Flower Extract 5:1
Fo-Ti Extract 12:1
Fo-Ti Powder
Garlic Extract 4:1
Gentian Root Extract 6:1
Ginger Root Extract 5%
Ginkgo Biloba Extract 8:1
Ginkgo Extract 24/6%<5
Ginkgo Leaf Extract 4:1
Ginseng (Korean) Powder
Ginseng (Panax) Extract 8%
Glucomannans Konjac Powder
Glucosamine HCl 99%
Glucsosamine Sulfate Sodium 95% Granulation
Goldenrod Extract 4:1
Goldenseal Root Extract 14%
Gotu Kola Extract 16%
Gotu Kola Extract 8:1
Grape Fruit Powder
Grape Seed Extract 10:1
Grape Seed Extract 4:1
Grape Seed Extract 95%
Grape Skin Extract 20:1
Grass-Leaved Sweetflai Extract
Green Tea Extract 30%
Green Tea Extract 95%
Guarana Seed Extract 22%
Guggul Extract 10%
Gugulipid Extract 10%
Gymnema Sylvestre Powder
Hawthorne Berry Powder
Hearbacious Peony Extract 5:1
Honeysuckle Herb Extract 4:1
Horehound Extract 10:1
Horehound Herb Powder
Horse Chestnut Extract 4:1
Horsetail Extract 7%

Horsetail Powder
Hydrangea Extract 8:1
Hyssop Extract 4:1
Isodon Glaucocalyx Extract 10:1
Jiaogulan Extract 4:1
Jingjie Extract 4:1
Kava Kava Extract 30%
Kelp Extract 4:1
Kidney Bean Extract 10:1
Kidney Bean Pole 8:1
Kola Nut Extract 10%
Kudzu Extract 6:1
L-Glutamine
Licorice Extract 10%
Licorice Powder
L-Tyrosine
Lycium Fruit Extract 5:1
Ma Huang Extract 8%
Maca Extract 4:1
Magnesium Stearate
Magnolia Officinal Extract 4:1
Marigold Extract (Lutein 5%)
Methylsufonylmethane 99%
Milk Thistle Seed Extract 80% silymarin
Motherwort Extract 4:1
Mucuna Pruriens Extract (15% L-Dopa)
Muira Puama Extract 4:1
Mushroom Extract 10:1 (feishi)
Myrobalan Extract 4:1
N-Acetyl-D-Glucosamine
Nettle Extract 7%
Nettle Leaf Powder
Olive Leaf Extract 18%
Orange Peel Extract 4:1
Oroxylum Indicum Extract 4:1
Oyster Meat Powder
Papaya Fruit Extract 4:1
Parsley Extract 4:1
Parsley Powder
Passion Flower Powder
Peppermint Extract 4:1
Perilla Seed Extract 4:1
Pharbitidis Extract 4:1
Pine Bark Extract 4:1
Polygala Tenoifolia Extract 4:1
Polygonum Extract 4:1
Propolis Extract 3%
Psyllium extract 4:1
Purple Willow Bark Extract 4:1
Pygeum Extract 4:1
Houttuynia Cordata Extract 5:1
Hydroxy Apatite
Indole-3-Carbinol 99%
Japanese Knotweed Extract
Jin Qian Cao Extract 4:1
Jujube Fruits Extract 4:1
Kava Kava Powder
Kelp Powder
Kidney Bean Pole 4:1
Kidney Bean Powder
Kudzu Extract 4:1
Lettuce Extract 4:1
L-Glycine
Licorice Extract 5:1
Lotus Leaf Powder
Lycium Fruit Extract 4:1
Ma Huang Extract 6%
Maca Extract 0.6%
Maca Root Powder
Magnolia Bark Powder
Maitake Mushroom Extract 4:1
Methozyisoflavone 99%
Milk Thistle Extract 4:1
Morinda Extract 5:1
Motherwort Powder
Muira Puama Extract 12:1
Muira Puama Powder
Mustard Seed Extract 8:1
Myrrha Gum Extract 2.5%
N-Acetyl-L-Cysteine
Nettle Leaf Extract 4:1
Noni Powder
Olive Powder
Orange Peel Powder
Oroxylum Indicum Powder
Oyster Shell Powder
Parsley Extract 10:1
Parsley Leaf Extract 4:1
Passion Flower Extract 4:1
Pau D'Arco Powder
Peppermint Powder
Periwinkle Extract 4:1
Phosphatidyl Serine 20%
Plantago Asiatica Leaf Extract 5:1
Polygonum Extract
Pregnenolone 99%
Pseudoginseng Extract
Pumpkin Seed Extract 4:1
Purslane Herb Extract 4:1
Quercetin

Radish Extract 4:1
Radix Polygoni Extract 4:1
Red Pepper Extract 4:1
Red Yeast Rice Extract 10:1
Rehmannia Root Extract 4:1
Rhodiola Rosea Extract 4:1
Rhododendron Powder
Rhubarb Root Powder
Rice Powder
Rumex Madaid Extract 4:1
Salvia Extract 4:1
Saw Palmetto Extract 25%
Saw Palmetto Extract 25%
Saw Palmetto Extract 45-50%
Saw Palmetto Powder
Schizandra Extract 4:1
Sea Cucumber Powder
Sesame (Black) Seed Powder
Shitake Mushroom Extract
Siberian Ginseng Extract 4:1
Skullcap Extract 4:1
Slippery Elm Powder
Songaria Cynomorium Extract 4:1
Spirulina Powder
St. John's Wort Extract 4:1
Stanol 50%
Stevia Extract 4:1
Suma Root Extract 4:1
Taurine Powder
Tomato Extract
(trans)-Resveratrol 20-25%
Tribulus Extract 40%
Trifal Extract 4:1
Turmeric Root Powder
Uva Ursi Powder
Valerian Root Extract 4:1
Vinca Major Seed Extract 10:1
White Willow Bark 15% (total salicins)
White Willow Bark 25%
White Willow Bark Powder
Wild Yam Extract 16%
Wild Yam Extract 6%
Williams Elder Extract 4:1
Wolfiporia Extract 8:1
Yerba Mate Extract (2% caffeine)
Yohimbe Bark Extract 15:1
Yohimbe Bark Extract 3%
Yucca Extract 4:1

Radix Isatidis Extract 4:1
Red Clover Extract 4:1
Red Yeast Rice
Red Yeast Rice Powder
Reishi Mushroom Extract 4:1
Rhododendron Extract 4:1
Rhubarb Extract 4:1
Riboflavin (B2)
Rosemary Extract 20%
Salvia Extract 10:1
SAMe
Saw Palmetto Extract 25%
Saw Palmetto Extract 4:1
Saw Palmetto Oil 85-95%
Schizandra Extract 10:1
Scopolia Acutangula Powder
Senna Leaf Powder
Shark Cartilage Powder
Siberian Ginseng Extract 0.8%
Siberian Ginseng Powder
Skullcap Extract 4:1
Sodium-Pyruvate 99%
Songaricum Powder
St. John's Wort Extract 0.3%
St. John's Wort Powder
Stephania Extract 4:1
Sulfate N+
Suma Root Powder
Thorowax Extract 4:1
Tomato Extract (0.2% Lycopene)
Tribulus Extract 10:1
Tribulus Powder
Turmeric Extract 4:1
Uva Ursi Extract 4:1
Valerian Root Extract 0.8%
Valerian Root Powder
White Wax Extract 4:1
White Willow Bark 20%
White Willow Bark Extract 4:1
Wild Yam Extract 10:1
Wild Yam Extract 4:1
Wild Yam Powder
Wolfberry Fruit Extract 10:1
Yellow Dock Root Extract 4:1
Yerba Mate Extract 4:1
Yohimbe Bark Extract 2%
Yohimbe Bark Powder

Enzymes

Alpha Galactosidase
Bromelain
Papain
Protease
Superoxide Dismutase
Amylase
Cellulase
Peptidase
Proteolytic Enzymes
Trypsin

Phospholipids

Lecithin
Phosphatidyl Serine
Phosphatidyl Choline

Specialty Nutraceuticals

5-Hydroxytryptophan
Alpha Lipoic Acid
Bee Products
Bovine Cartilage
Cetyl Myristoleate
Chitosan
Chondroitin Sulfate
Collagen
Creatine
DMAE
Germanium Sesquioxide
Glucosamine HCL
HMB (Hydroxyl Methyl Butyrate)
Lactic Acid
Liver Products
Maltose-anhydrous
MSM
Phytosterols
Pyruvate
SAMe
Shark Cartilage
Vanadyl Sulfate
Yeast
Acetyl L-Carnitine
Alpha-Ketoglutarates
Betaine Hydrochloride
Caffeine
Charcoal
Choline
Coenzyme Q10
Colostrum
Cyanocobalamin (Vitamin B12)
Fumaric Acid
Glandular Products
Glucosamine Sulfate
Immunoglobulin (Immune System Support)
L-Carnitine
Malic Acid
Mannose (d-mannose)
Other Carnitine Products
Picolinic Acid
Red Yeast Extract
Selenium Yeast
Theobromine
Velvet Deer Antler

Herbal Oils

Aloe Vera
Artichoke Oil
Black Currant Seed Oil 15% GLA
Borage Oil 22% GLA
Artichoke Oil
Black Currant Seed Oil 14% GLA
Borage Oil 20% GLA
Boswellia Serrata Oil

CLA Conjugated Linolic Acid 75% min.
Evening Primrose Oil 9% GLA
Garlic Oil
Guggul Lipid Oil
Oregano Oil
Pumpkin Seed Oil
Rosehip Oil
Saw Palmetto Oil
Tocotrienol Palm Oil
Wheat Germ Oil

Evening Primrose Oil 10% GLA
Flax Seed Oil 50% ALA
Grape Seed Oil
Olive Leak Extract
Perilla Oil 60% ALA
Pygeum Oil
Rosemary Oil
Sterols
Walnut Oil
Sesame Seed Oil
Dill Seed Oil
Clove Bud Oil
Ginger Root Oil
Cinnamon Leaf Oil
Fennel Seed Oil
Curcuma Longa Oil
Cummin Seed Oil
Celery Seed Oil
Coriander Seed Oil

Red Rasberry Seed Oil
Cranberry Seed Oil
Blackberry Seed Oil

Marine Oils

Cod Liver Oil (1000 A /100 D)
Fish Oil 30% EPA / 20% DHA
Fish Oil Deodorized
Marine Lipid Oil 30/20
Salmon Oil 18% EPA / 12% DHA

Cod Liver Oil (2500A / 250D)
Fish Oil Concentrated
Marine Lipid Oil 18/12
Marine Lipid Oil 36/24
Squalene Oil (Shark)

Other Oils

Alpha Lipoic Acid
Coenzyme Q10 .
Medium Chain Triglycerides MCT .

Cetyl Myristoleate CM
Lecithin

Vitamins

Ascorbic Acid (Vitamin C)
Biotin
Folic Acid
Inositol
Mixed Tocopherols
Orotic Acid
Pantothenates
Pyridoxine Hydrochloride (Vitamin B6)

B Vitamins
Fat Soluble Vitamins
HCA (Hydroxycitric Acid)
Mineral Ascorbates
Niacin (Vitamin B3)
PABA (Para-Aminobenzoic Acid)
Pantothenic Acid (Vitamin B5)
Riboflavin (Vitamin B2)

Synthetic Vitamins
Tocotrienols
Vitamin D
Vitamin F
Vitamin Oils
Vitamin-Mineral Premixes
Thiamine (Vitamin B1)
Vitamin A
Vitamin E
Vitamin K
Vitamin Premixes
Water Soluble Vitamins

Carotenoids

Apocarotenal
Beta-Carotene
Carotenoids
Lycopene
Astaxanthin
Canthaxanthin
Lutein / Lutein Esters
Zeaxanthin

Hormones

7-Keto-DHEA
DHEA
Nor-Androstenedione
Progesterone
Androstenedione
Melatonin
Pregnenolone
19 Nor-4-Androstendiol
19 Nor-4-Androstenedione
19 Nor-5-Androstenediol
19 Nor-5-Androstendione
3-Indolebutyric Acid
4 Androstendiol
4 Androstendione
6 Furfurylaminopurene
6-Benzylaminopurine

Minerals

Boron
Chelated Minerals
Chromium
Cobalt
Dolomite
Iron
Manganese
Mineral Products
Other Minerals
Potassium
Sodium
Trace Minerals
Zinc
Calcium
Chloride
Coated Minerals
Copper
Iodine
Magnesium
Mineral Premixes
Molybdenum
Phosphorus
Selenium
Specialty Minerals
Vanadium
Malic Acid
Pyruvate

Probiotics

Acidophilus
Bifido Bacteria
Lactobacillus

Proteins / Amino Acids

Amino Acids
Betaine
Casein
Functional Soy
Glutamic Acid
L-Alanine
L-Arginine
L-Cysteine
L-Glutamine
L-Glycine
L-Histidine
L-Isoeucince
L-Leucine
L-Lysine
L-Methionine
L-Ornithine
L-Phenylalaline
L-Proline
L-Taurine
L-Threonine
L-Tryptophan
L-Tyrosine
L-Valine
N-Acetly-L-Cysteine
Protein
Soluble Soy
Soy Protein Isolates
Textured Soy
Whey Protein Isolates

Specialty Nutrients

ATP
Forskolin
Sterol Esters
Stanol Esters
Probiotics
Lactoferin
Lutein Esters
Zeaxanthin
Immunoglobulins
Ipriflavone
Isoflavones
Fructo-Oligo-Saccharides
Inulin
Huperzine A
Melatonin
Medicinal Mushrooms
Bile Products
Peptone Products
Glandular Products
Pancreatic Products
Thyroid Products

Ribose
Probiotics

Oleo Resins

Dill Seed Oleo Resin
Black Pepper Oleoresin
Capsicum Oleoresin

EXAMPLES XI

The present invention further contemplates the use of any active ingredients or medicaments known in the art. In this regard, it is well within the purview of the skilled artisan to select a particular combination of active ingredients or medicaments. The following non-limiting lists illustrate exemplary active ingredients or medicaments and the broader subclasses and classes to which they belong for use in this invention.

MEDICAMENTS ACTING ON THE AUTONOMIC NERVOUS SYSTEM

Adrenergic Medicaments
Cholinergic Medicaments
Direct Muscarinic Agonists Choline Esters
acetylcholine
bethanechol (Urecholine®)
carbachol
methacholine (Provocholine®)
Alkaloids
muscarine
pilocarpine (Pilocar®)
Direct Nicotinic Agonist
nicotine
Acetylcholinesterase Inhibitors Acetylcholinesterase Inhibitors ("Reversible")
edrophonium (Tensilon®)
neostigmine (Prostigmin®)
physostigmine (Antilirium®)
Acetylcholinesterase Inhibitors ("Irreversible")
(diisopropylflurorphosphate DFP®)
echothiophate (Phospholine®)
isoflurophate (Floropryl®)
Muscarinic Antagonists Atropine
ipratropium (Atrovent®)
pirenzepine
scopolamine

2-PAM: Acetylcholinesterase Reactivator Pralidoxime (Protopam) {2-PAM}:peripheral acetylcholinesterase reactivator for certain phosphoryl-enzyme complexes

Ganglionic Blockers

hexamethonium

mecamylamine (Inversine®)

trimethaphan

Catecholamines

dobutamine (Dobutrex®)

dopamine (Intropin®)

epinephrine

isoproterenol (Isuprel®)

norepinephrine (Levophed®)

Direct Adrenoceptor Agonist Medicaments

albuterol (Ventolin, Proveritil®)

clonidine (Catapres®)

methoxamine (Vasoxyl®)

oxymetazohne (Afrin®)

phenylephrine(Neo-Synephrine®)

ritodrine(Yutopar®)

salmeterol (Serevent®)

terbutaline (Brethine®)

Indirect-Acting Sympathomimetic Medicaments

amphetamine

cocaine

ephedrine, Pseudoephedrine tyramine

Alpha-Adrenoceptor Antagonists Medicaments

doxazosin (Cardura®)

labetalol (Trandate, Normodyne®)

phenoxybenzamine (Dibenzyline®)

phentolamine (Regitine®)

prazosin (Minipress®)

terazosin (Hytin®)

tolazoline (Prisoline®)

trimazosin

yohimbine(Yocon®)

β-Adrenoceptor antagonist Medicaments

atenolol (Tenormin®)

butoxamine

esmolol (Brevibloc®)

labetalol (Trandate, Normodyne®)

metoprolol (Lopressor®)

nadolol (Corgard®)

pindolol (Visken®)

propranolol(Inderal®)

timolol (Blocadren®)

Adrenergic Neuron Blocking Medicaments

guanethidine (Ismelin®)

reserpine

CARDIOVASCULAR SYSTEM DISORDERS

Cardiovascular testing and diagnosis
Hypertension (HTN)
Heart Failure
Ischemic Heart Disease
Myocardial Infarction
Arrhythmias
Isolated Diastolic Heart Failure and Cardiomyopathies
Cardiac Transplantation
Venous Thromboembolism
Stroke
Hyperlipidemia
Peripheral vascular disease

Diuretics
- carbonic-anhydrase inhibitors
- loop diuretics
- osmotic diuretics
- potassium sparing diuretics
- thiazide diuretics

Anitiarrhythmic Medicaments
- Sodium Channel blocking agents
  - **isopyramide** (Norpace®)
  - **flecainide** (Tambocor®)
  - **ibutilide**
  - **lidocaine** (Xylocaine®)
  - **mexiletine** (Mexitil®)
  - **moricizine** (Ethmozine®)
  - **procainamide** (Proestyl, Procan®)
  - **propafenone** (Rythmol®)
  - **quinidine**
  - **tocainide** (Tonocard®)
- Calcium Channel blocking agents
  - **bepridil** (Vasocor®)
  - **diltiazem** (Cardizem®)
  - **verapamil** (Isoptin, Calan®)
- Adrenergic receptor antagonists
  - **propranolol** (Inderal®)
- Other medicaments
  - **adenosine** (Adenocard®)
  - **amiodarone** (Cordarone®)
  - **bretylium** (Bretylol®)
  - **disopyramide** (Norpace®)
  - **esmolol** (Brevibloc®)
  - **sotalol** (Betapace®)

Hypolipidemic medicaments

HMG CoA Reductase Inhibitors

atorvastatin (Lipitor®)
cerivistatin (Baycol®)
lovastatin (Mevacor®)
pravastatin (Pravochol®)
simvastatin (Zocor®)

Bile-acid sequestrants

cholestyramine (Questran®)
colestipol (Colestid®)

Fibric acids

clofilbrate
fenofibrate (Tricor®)
gemfibrozil (Lopid®)
niacin, nicotinic acid
probucol (Lorelco®)

Antihypertensive medicaments

Adrenergic receptor antagonists

acebutalol (Sectral®)
atenolol (Tenormin®)
betaxolol (Betoptic®)
bisoprolol (Zebeta®)
carteolol (Cartrol®)
clonidine (Catapres®)
labetalcl (Normodyne®)
metoprolol (Toprol®)
penbutalol (Levatol®)
pindolol (Visken®)
prazosin (Minpres®)
propranolol (Indreal®)
terazosin (Hytrin®)
timolol (Timoptic®)

Calcium Channel Antagonists

amlodipine (Norvasc®)
diltiazem (Cardizem®)
felodipine (Plendil®)
isradipine (Dynacirc®)
nicardipine (Cardene®)
nifedipine (Procardia®)
nimodipine (Nimotop®)
nisoldipine (Sular®)
verapamil (Isoptin, Catan®)

Angiotensin Converting Enzyme (ACE) Inhibitor

benazepril (Lotensin®)
bepridil (Vascor®)
captopril (Captoen®)
enalapril (Vasotec®)
fosinopril (Monopril®)

lisinopril (Prinivil, Zestril®)
moexipril (Univasc®)
quinapril (Accupril®)
ramipril (Altace®)
Angiotensin II Receptor Antagonists
losartan (Cozaar®)
valasartan(Diovan®)
Diuretics
amiloride (Midamor®)
bumetanide (Bumex®)
chlorothalidone (Hygroton®)
ethacrynic acid (Edecrin®)
furosemide (Lasix®)
hydrochlorothiazide (Diuril®)
indapamide (Lozol®)
metolazone (Zaroxolyn®)
torsemide (Demadex®)
triamterene
Other Agents
hydralazine (Apresoline®)
minoxidil (Rogaine®)
nitroprusside (Nipride®)
prazosin (Minipres®)
reserpine
sotalol (Brevibloc®)
spironolactone (Aldactone®)
terazosin (Hytrin®)
Antianginal medicaments
Organic nitrates
Calcium Channel Antagonists
Adrenergic Receptor Antagonists
amyl nitrite
erythrityl tetranitrate
isosorbide dinitrate (Isordil®)
nitroglycerin
pentaerythritol tetranitrate
Congestive Heart Failure Medicaments
phosphodiesterase (PDE) inhibitors
amrinone (Inocor®)
milrinone (Primacor®)
carvedilol (Coreg®)
cardiac glycosides
digitoxin
digoxin
diuretics
ACE Inhibitors
Dobutamine
dopamine

RESPIRATORY SYSTEM DISORDERS

Asthma
Chronic Obstructive Lung Disease (COLD) / Chronic Obstructive Pulmonary Disease (COPD)
Acute Respiratory Distress Syndrome (ARDS)
Drug-Induced Pulmonary Disease
Cystic Fibrosis
Corticosteroids
beclomethasone
betamethasone
cortisone
dexamethasone
fluticasone (Flovent/Flonase®)
hydrocortisone
methylprednisolone
prednisolone
prednisone
triamcinolone
sympathomimetics
albuterol (Proventil/Ventolin®)
salmeterol (Serevent®)
muscarinic antagonists
ipratropium (Combivent®)
leukotriene pathway inhibitors
montelukast (Singulair®)
zafirtukast (Accolate®)
mast cell stabilizers
cromolyn (Intal®)
methylxanthines
theophylline
aminophylline
Dnase (Pulmozyme®)

GASTROINTESTINAL SYSTEM DISORDERS

Gastro-esophageal Reflux Disease (GERD)
Peptic Ulcer Disease
Inflammatory Bowel Disease
Nausea and Vomiting
Diarrhea, Constipation, Irritable Bowel Disease (IBD)
Portal Hypertension and Cirrhosis
Drug-Induced Liver Disease
Pancreatitis
Viral Hepatitis
Liver Transplantation

Histamine-2 receptor antagonists
famotidine (Pepcid®)

nizatidine (Axid®)
pantoprazole (Protonix®)
rabeprazole (Aciphex®)
ranitidine (Zantac®)
Proton Pump Inhibitors (PPIs)
esomeprazole (Nexium®)
lansoprazole (Prevacid®)
omeprazole (Prilosec®)
Anti-nausea / anti-vertigo medicaments
anticholinergics
antihistamines (Histamine-1 receptor antagonists)
dopamine antagonists
prokinetic gastric stimulant
serotonin $5HT_3$ receptor antagonists
dolasetron (Anzmet®)
granisetron (Kytril®)
ondansetron (Zofran®)
other medicaments
hydroxyzine (Atarax, Vistaril®)
corticosteroids
benzodiazepines
cannabinoids
Prokinetic gastric stimulants (gastric motility stimulants)
cisapride(Propulsid®))
metoclopramide (Reglan®)
Laxatives
Saline laxatives
magnesium salts
sodium salts
irritant / stimulant medicaments
cascara
senna
phenolphthalein
bisacodyl
casanthranol
castor oil
bulk-producing medicaments
methylcellulose
psyllium
polycarbophil
lubricant
mineral oil
surfactants
docusate
miscellaneous
glycerin
lactulose
Anti-diarrheal medicaments

diphenoxylate
atropine
diphenoxin
loperamide
bismuth
lactobacillus

Ulcerative Colitis Medicaments
mesalamine
olsalazine

RENAL SYSTEM DISORDERS
Acute Renal Failure
Progressive Renal Failure / Chronic Renal Failure

NEUROLOGIC SYSTEM DISORDERS
Multiple Sclerosis and inflammatory polyneuropathies
Epilepsy
Parkinson's disease and Movement Disorders
Pain management
Headache
Amyotrophic Lateral Sclerosis

Anti-epileptic medicaments
carbamazepine (Tegretol®)
divalproex sodium (Depakote®)
felbamate (Felbatol®)
gabapentin (Neurontin®)
lamotrigine (Lemictal®)
oxcarbazepine (Trileptal®)
phenytoin (Dilantin®)
topiramate (Topamax®)
zonisamide (Zonegran®)

Antimigraine medicaments
Serotonin 5HT1d receptor agonists
almotriptan (Axert®)
frovatriptan (Frova®)
naratriptan (Amerge®)
rizatriptan (Rizalt®)
sumatriptan (Imitrex®)
zolmitriptan (Zomig®)
ergot alkaloids
dihydroergotamine (DHE)
isometheptine/dichlorophenazone (Midrin®)
caffeine
pizotifen (Sanomigran®)

Sedative-hypnotic Medicaments
benzodiazepines
alprazolam (Xanax®)

clonazepam (Kloriopin®)
clorazepate (Tranxene®)
diazepam (Valium®)
flumazenil (Romazicon®) – antagonist
lorazepam (Ativan®)
midazolam (Versed®)
triazolam (Halcion®)
barbiturates/Anesthetics
pentobarbital (Nembutal)
Phenobarbital (Luminal®)
thiopental (Pentothal®)
non-depressant anxiolytic
buspirone (BuSpar®)
Treatment of alcoholism
disulfiram (Antabuse®)
Pain Management Medicaments
Opioids
Opioid Peptides
beta-endorphin
dynorphin
enkephalins
Agonists
codeine
etorphine
fentanyl (Sublimaze®)
hydrocodeine
hydromorphone
rneperidine (Demerol®)
methadone (Dolophine®)
morphine
oxycodone
propoxyphene
Agonist-antagonists
buprenorphine
Partial Agonist
dezocine (Dalgan®)
nalbuphine (Nubain®)
pentazocine (Talwain®)
Antagonist
naloxone (Narcan®)
Non-opiate
acetaminophen (tylenol®)
tramadol (ultram®)
Anti-Parkinsonism Medicaments
levodopa
carbidopa
bromocriptine (Parlodel®)
pergolide (Permax®)

amantadine (Symmetrel®)
selegiline (Deprenyl®)
anticholinergic agents
dopamine Agonists
pramipexole (Mirapex®)
ropinirole (Requip®)
COMT inhibitors
entacapone (Comtan®)
tolcapone (Tasmar®)

Anti-Spasticity Medicaments
baclofen (Lioresal®)
botulinum toxin type A (Botox®)
carisoprodol (Soma, Rela®)
chlorphenesin (Maolate®)
chlorzoxazone (Paraflex®)
cyclobenzaprine (Flexeril®)
dantrolene (Dantrium®)
diazepam (Valium®)
metaxalone (Skelaxin®)
methocarbamol (Robaxin®)
orphenadrine (Nor-Flex®)
tizanidine (Zanaflex®)

PSYCHIATRIC SYSTEM DISORDERS
Childhood psychiatric disorders
Attention Deficit Hyperactivity Disorder (ADHD) / Attention Deficit Disorder (ADD)
Eating disorders
Alzheimer's disease and Dementia Disorders
Substance abuse and Addictive Disorders
alcohol, tobacco and caffeine abuse
Schizophrenia
Depressive disorders
Bipolar disorders
Anxiety disorders
Obsessive-Compulsive disorders
Sleep disorders

Psychostimulant Medicaments
amphetamine mixed salts (Adderall®)
dextroamphetamine (Dexedrine®)
methylphenidate (Ritalin, Concerta®)

Antipsychotic Medicaments (dopamine antagonists)
Phenothiazine type
chlorpromazine (Throazine®)
fluphenazine (Prolixin®)
Thioxanthene type
thiothixene (Navane®)

Butyrophenone type
haloperidol (Haldol®)
Dibenzodiazepine type
clozapine (Clozaril®)
Thienobenzodiazepine type
olanzapine (Zyprexa®)
quetiapine (Seroquel®)

Antidepressant Medicaments

Tricyclic antidepressants (TCA's)
amitriptyline (Elavil, Endep®)
clomipramine (Anafranil®), also a SSRI
desipramine (Norpramin®)
doxepin (Sinequan®)
imipramine (Tofranil®)
maprotiline (Ludiomil®)
nortriptytine (Aventyl, Pamelor®)
protriptyline (Vivactil®)

Monoamine oxidase inhibitors (MAO-I's)
clorgyline (specific for MAO type A)
isocarboxazid (Marplan®)
phenelzine (Nardil®)
tranylcypromine (Parnate®)

Second Generation Medicaments (not including SSRIs)
amoxapine (Asendin®)
bupropion (Wellbutrin®)
netazodone (Serzone®)
trazodone (Desyrel®)

Serotonin-Specific Reuptake Inhibitors (SSRIs)
citalopram (Celexa®)
clomipramine (Anafranil®)
escitalopram (Lexapro®)
fluoxetine (Prozac®)
fluvoxamine (Luvox®)
paroxetine (Paxil®)
sertraline (Zoloft®)

Other
lithium
mirtazapine (Temeron®)
venlafaxine (Effexor®)

Anti-anxiety agents

barbiturates
benzodiazepines
buspirone (Buspar®) chloral hydrate
doxepin
hydroxyzine
sedative-hypnotics
serotonin reuptake inhibitors

Anti-demential Medicaments

cholinesterase inhibitors
donepezil (Aricept®)
galantamine (Reminyl®)
rivastigmine (Exelon®)
tacrine (Cognex®)

ENDOCRINOLOGIC SYSTEM DISORDERS
Diabetes mellitus
Thyroid disorders
Adrenal Gland disorders
Pituitary Gland disorders

ACTH
Adrenal androgens
Adrenocortical Function Antagonists
Mineralocorticoid antagonists

Anti-Diabetic Medicaments
Insulin
Sulfonylureas
acetohexamide (Dymelor®)
chlorpropamide (Diabinese®)
glimepiride (Amaryl®)
glipizide (Glucotrol®)
glyburide (Micronase, DiaBeta®)
tolazamide (Tolinase®)
tolbutamide (Orinase®)
Biguanides
metformin (Glucophage®)
Alpha-glucosidase Inhibitors
acarbose (Precose®)
miglitol (Glyset®)
Thiazolidinedione Derivatives
pioglitazone (Actos®)
rosiglitazone (Avandia®)
troglitazone (Rezulin®)

Thyroid Disorder Medicaments
Levothyroxine
Liothyronine
Liotrix

Hypothalamic and Pituitary Gland Medicaments
bromocriptine (Parlodel®)
chorionic gonadotropin (hCG)
corticotropin generic (ACTH)
cosyntropin (Cortrosyn®)
desmopressin (DDAVP)
gonadorelin acetate (GnRH) (Lutrepulse®)
gonadorelin hydrochloride (GnRH) (Factrel®)

goserelin acetate (Zoladex®)
growth hormone
histrelin (Supprelin®)
leuprolide (Lupron®)
menotropins (hMG)(Pergonal, Humegon®)
natarelin (Synarel®)
octreotide (Sandostatin®)
oxytocin (Normodyne®)
pergolide(Permax®)
protirelin (Thypinone, Relefact TRH®)
sermorelin (GHRH) (Geref®)
somatrem(Protropin®)
somatropin(Humatrope, Nutropin®)
thyrotropin
urofollitropin(Metrodin®)
vasopressin (Pitressin Synthetic®)

GYNECOLOGIC SYSTEM AND OBSTETRIC CONDITIONS

Pregnancy and Lactation
Infertility
Contraception
Menstruation-related disorders
Endometriosis
Hormone Replacement Therapy (HRT)

Conjugated estrogens (Premarin®)
desogestrel
di-norgestrel
ethinyl diacetate
ethinyl estradiol
levonorgestrel
medroxyprogesterone
norethindrone norgestimate
progesterone

UROLOGIC SYSTEM DISORDERS

Erectile Dysfunction
Benign Prostatic Hypertrophy
Urinary Incontinence

apomorphine
alprostadit
phosphodiesterase (PDE-5) inhibitors
sildenafil (Viagra®)
tadalafil (Cialis®)
vardenafil (Levitra®)
tolterodine(Detrrol®)
tamulosin (Flomax®)

yohimbine

IMMUNOLOGIC SYSTEM DISORDERS

Systemic Lupus Erythematosus and other Collagen-vascular diseases

Allergic and pseudo-allergic drug reactions

BONE AND JOINT SYSTEM DISORDERS

Osteoporosis and Osteomalacia

Rheumatoid Arthritis

Osteoarthritis

Gout and hyperuricemia

Medicaments used in the Control of Inflammation

Non-steroidal anti-inflammatory drugs (NSAIDs)

aspirin

diclofenac (Cataflam, Voltaren®)

diflusnisal (Dolobid®)

etodolac (Lodine®)

fenoprofen (Nalfon®)

flubiprofen (Ansaid®)

ibuprofen (Motrin, Advil, Nurpin®)

indomethacin (Indocin®)

ketoprofen (Orudis®)

ketorolac (Toradol®)

meclofenamate

nabumetone (Relafen®)

naproxen(Naprosyn®)

oxaprozin(Daypro®)

phenylbutazone

piroxicam (Feldene®)

salicytate

sulindac (Clinoril®)

tolmetin ((Tolectin®)

Cyclocxygenase-2 inhibitors (COX-2)

celecoxib (Celebrex®)

rofecoxib (Vioxx®)

Arthritis and Gout Medicaments

allopurinol

anti-malarial compounds

chloroquine

colchicine

enbrel

Glucocorticoids

Gold

methotrexate

NSAIDs

Penicillamine

Other Medicaments

alendronate (Fosamax®)
raloxifene (Evista®

DISORDERS OF THE EYES, EARS, NOSE, AND THROAT SYSTEMS
Glaucoma
Allergic rhinitis
Histamine-1 receptor antagonists
brompheniramine (Dimetane®)
cetirizine (Zyrtec®)
chlorpheniramine (Chlor-Trimeton®)
clemastine (Tavist®)
cyproheptadine (Periactin®)
dimenhydrinate (Dramamine®)
diphenhydramine (Bendaryl®)
doxylamine (Sominex, Unisom®)
fexofenadine (Allegra®)
loratidine (Claritin®)
Sympathomimetic medicaments
pseudoephedrine (Sudated®)

DERMATOLOGIC SYSTEM DISORDERS
Acne
Psoriasis
Rosacea and pigmentation disorders

HEMATOLOGIC SYSTEM DISORDERS
Hematopoeisis
Anemias
Coagulation disorders
Sickle-cell anemia
Drug-induced hematologic disorders

Coagulation disorders Medicaments
aspirin
clopidogrel (Plavix®)
fibrinolytic inhibitors
fibrinolytics
glycoprotein (GP) IIb/IIIa antagonists / monoclonal antibodies
abciximab (Reopro®)
eptifibatide (Integrelin®)
tiofibran (Aggrastat®)
heparin
low-molecular weight heparins
Plasma fractions - blood factors
ticlopidine (Ticlid®)

vitamin K
warfarin (Coumadin®)

INFECTIOUS SYSTEM DISEASES

Central Nervous System (CNS) infections
Lower Respiratory Tract Infections
Upper Respiratory Tract Infections
Skin and Soft Tissue Infections
Infective Endocarditis
Tuberculosis
Gastrointestinal Infections and Enterotoxigenic poisonings
Intra-abdominal Infections
Parasitic diseases
Urinary Tract Infections and Prostatis
Sexually Transmitted Diseases
Bone and Joint Infections
Sepsis and Septic Shock
Superficial Fungal Infections
Invasive Fungal Infections
Infections in Immunocompromised Patients
Antimicrobial prophylaxis in Surgery
Vaccines, toxoids, and other immunobiologics
Human Immunodeficiency Virus Infection

Medicaments used in Infectious diseases

Cell Wall Synthesis Inhibitors

Penicillins

amoxicillin (Amoxil Polymox®)
ampicillin (Principen, Omnipen®)
benzathine (Penicillin G®)
benzyl Penicillin (Penicillin G®)
carbenicillin (Geocillin®)
cloxacillin (Cloxapen®)
dicloxacillin (Dynapen®)
methicillin (Staphcillin®)
mezlocillin
nafcillin (Nafcil, Unipen®)
oxacillin
phenoxymethyl Penicillin (Penicillin V®)
piperacillin (PipracH®)
ticarcillin (Ticar®)

Cephalosporins

1st generation:

cefazolin (Ancef, Defzol®)
cephalexin (Keflex®)
cephatothin (Keflin®)

2nd generation:

cefaclor (Ceclor®)

cefoxitin (Mefoxin®)
cefpodoxime (Vantin®)
cefuroxime (Zinacef, Ceftin®)
loracarbef (Lorabid®)
3rd generation:
cefoperazone
cefotaxime (Claforan®)
cefotetan
ceftazidime (Fortax, Taxidime, Tazicef®)
ceftriaxone (Rocephin®)
veftizoxime (Ceflizox®)
4th generation:
cefepime
Other beta-Lactams aztreonam (Azactan®)
clavulanic acid
imipenem (Primaxin®)
meropenem (Merrem IV®)
sulbactam
Other Cell-Wall Synthesis Inhibitors bacitracin
cycloserine
fosfomycin (Monurol®)
vancomycin (Vancocin®)
Agents Which Affect Cell Membranes
Polymixins
Colistimethate
Potymyxin B
Protein Synthesis Inhibitors
Aminoglycosides
amikacin (Amikin®)
gentamicin (Garamycin®
kanamycin (Kantrex®)
neomycin
netilmicin (Netromycin®)
streptomycin
tobramycin
Tetracyclines
demeclocycline (Declomycin®)
doxycycline
doxycyclmne (Vibramycin, Doryx®)
tetracycline (Achromycin®)
Macrolides
azithromycin (Zithromax®)
clarithromycin (Biaxin®)
erythromycin esters erythromycin
Other Protein Synthesis Inhibitors
Chloramphenicol (Chloromycetin®)
Clindamycin (Cleocin®)
Spectinomycin (Trobicin®)

Inhibitors of Folate-Dependent Pathways
co-trimoxazole
silver Sulfadiazine
sodium Sulfacetamide
sulfamethoxazole (Gantanol®)
sulfasalazine (Azulfidine®) (Salicylazosulfapyridine®)
sulfisoxazole (Gantrisin®)
sulfonamides
Dihydrofolate Reductase Inhibitor
trimethoprim
DNA Gyrase Inhibitors
ciprofloxacin (Cipro®)
gatifloxacin (Tequin®)
levofloxacin (Levaquin®)
lomefloxacin (Maxaquin®)
nalidixic acid
ofloxacin (Floxin®)
Urinary Tract Antiseptics
nitrolurantoin
Antimyobacterial Agents
First-line anti-TB medicaments
ethambutol
isoniazid (INI-I)
pyrazinamide
rifampin (Rimactane®)
streptomycin
Second-line anti-TB medicaments
capreomycinA
cycloserine
dapsone
ethionamide
para-aminosalicylic acid
AntiFungal Agents
amphotericin B (Fungione, Amphotec®)
clotrimazole (Mycelex®)
fluconazole (Diflucan®)
flucytosine
griseofulvin
itraconazole (Sporanox®)
ketoconazole (Nizoral®)
miconazole (Monistat®)
nystatin (Mycostatin®)
AntiParasitic Agents
Antimalarials
chloroquine (Aralen®)
mefloquine (Lariam®)
primaquine
pyrimethamine-sulfadoxine (Fansidar®)

Anti protozoals
metronidazole (Flagyl®)
pentamidine isethionate
pyrimethamine-sulfonamide
trimethoprim (generic) sulfamethoxazole (Gantanol®)
Antihelminthic Medicaments
mebendazole
praziquantel (Biltricide®)
pyrantel pamoate
thiabendazole (Mintezol®)
Antiviral Medicaments
acyclovir (Zovirax®)
didanosine (DDI)
foscarnet (Foscavir®)
ganciclovir (DHPG, Cytovene®)
ribavirin
rimantadine
stavudine (d4T))
valacyclovir (Valtrex®)
vidarabine (Vira-A®)
zalcitabine (ddC)
zidovudine (Azidothymidine, AZT®)
Protease inhibitors
indinavir (Crixivan®)
ritonavir (Norvir®)
saquinavir (Fortovase®)

ONCOLOGIC AND IMMUNOLOGICAL DISORDERS

Breast Cancer
Lung Cancer
Colorectal Cancer
Prostate Cancer
Malignant Lymphomas
Ovarian Cancer
Acute Leukemias
Chronic Leukemias
Melanoma and other Skin Cancers
Hematopoeitic Stem Cell Transplantation

Anti-neoplastic Medicaments

Alkylating Agents
busulfan (Myleran®)
carboplatin (Paraplatin®)
carmustine (BNCU,BiCNU)
cisplatin(Platinol®)
cyclophosphamide (Cytoxan®)
ifofamide(Ifex®)
lomustine (CCNU,CeeNU)

mechlorethamine (Mustargen®)
meiphalan (Alkeran®)
procarbazine (Matulane®)
thiotepa
Antimetabolites
folic acid Antagonist
methotrexate
Purine Antagonists 6-mercaptopurine
6-thioguanine
Pyrimidine Antagonists
cytarabine (ARA-C)
fluorouracil (5-FU)
Hormonal Agents: Hormones
diethylstilbestrol (DES)
estrogens
prednisone (Deltasone®)
Modulation of Hormone Release & Action Aminoglutethimide
leuprolide acetate
tamoxifen (Nolvadex®)
Plant Alkaloids
Vinca Alkaloids
vinblastine (Velban®)
vincristine (Oncovin®)
Podophyllotoxins
Etoposide (VP-16)
Other
docetaxel (Taxotere®)
paclitaxel (Taxol®)
Antibiotics
bleomycin (Blenoxane®)
dactinomycin (Cosmegen®)
daunorubicin (DaunoXome®)
doxorubicin (Adriamycin®)
mitomycin (Mutamycin®)
Other Anti-neoplastic Medicaments
amsacrine (AMSA)
azathioprine (Imuran®)
capecitabine (Xeloda®)
chlorambucil (Leukeran®)
cyclosporine (Sandimmune, Neoral®)
gemcitabine (Gemzar®)
hydroxyurea (Hydrea®)
mitotane (Sodren®)
mitoxantrone (Novatrone®)
pamidronate (Aredia®)

Immunosuppressant Medicaments

15-desoxyspergualin
corticosteroids

cyclosporine
Interferons
Interleukins
mycophenolate mofetil
sirolimus (rapamycin®)
tacrolimus
thalidomide

NUTRITIONAL DISORDERS

Malnutrition, vitamin and mineral deficiencies
Enteral Nutrition
Obesity
orlistat (Xenical®)
appetite suppressants
sympathomimetic stimulants
amphetamine stimulants
Mineral supplementation
calcium ion iodine
iron
magnesium ion
phosphorous
potassium ion
selenium
sodium ion
zinc
Fat-soluble vitamins
vitamin A
vitamin D
vitamin E
vitamin K
Water-soluble vitamins
vitamin C
thiamine (vitamin B1)
riboflavin (vitamin B2)
niacin (vitamin B3)
pyridoxine (vitamin B6)
folate
cyanocobalamin (vitamin B12)

MEDICAMENTS USED TO ALLEVIATE SYMPTOMS OF ALLERGIC RHINITIS, UPPER RESPIRATORY SYMPTOMS, COUGH, MILD ACHES AND PAINS

Nasal Decongestants
ephedrine
phenylephrine
phenylpropanolamine
pseudoephedrine
Antihistamines (Histamine-1 receptor antagonists)

Antitussive agents
benzonatate
codeine
dextromethorphan
Expectorants
guaifenesin
iodinated glycerol
terpin hydrate
Xanthines
aminophylline
caffeine
dyphylline
theophylline
Pain relievers
narcotic agonists
NSAIDS
acetam inophen

DIETARY SUPPLEMENTS
Arnica
Bilberry
Black Cohosh
Cat's claw
Chamomile
Echinacea
Evening Primrose Oil
Fenugreek
Flaxseed
Feverfew
Garlic
Ginger root
Ginkobiloba
Ginseng
Goldenrod
Hawthorn
Kava-Kava
Licorice
Milk thistle
Psyllium
Rauwolfia
Senna
Soybean
St. John's wort
Saw palmetto
Turmeric
Valerian

THERAPEUTIC PROTEINS and Biotechnology Medicaments

Additional Agents: Norvasc, Neurontin, Paxil, Augmentin, Propecia, Lamisil, Lescol, bisphosphonate.

EXAMPLES XII

As can be seen above, various embodiments of the present invention can be utilized in specific medical applications. By way of example only and not by way of limitation, the present invention can be practiced to prepare delivery devices for use in chemotherapy to address/treat, by way of example and not by limitation, the following aspects of chemotherapy: psychological, timing (to coincide with tumor growth for example) route of administration, nausea, vomiting (CINV), compliance, and cost (e.g. reduce hospital management of patients, reduce the number of "repeat" drug doses due to patient vomiting, etc.). Still futher, the just mentioned aspects are not limited to chemotherapy, as the present invention can be practiced to address common aspects between chemotherapy and other treatments.

Further by way of examples, capsules containing Zofran (ondansertron), Temodar (temozolomide) can be made.

Still further, the present invention can be used in cardiovascular treatments, for example hypertension, heart failure, and heart rhythm disorders. Also, the present invention can be used in immunology (e.g. transplant rejections, auto-immune disorders, etc.). The present invention can be used to treat neurological disorders (such as Parkinson's disease, dementia, stroke, epilepsy, and migraine headache, etc.), psychiatric disorders (schizophrenia, bipolar disease, depression, anxiety, ADHD / ADD, Addictions, etc.), infectious diseases (fungal, bacterial, viral (HIV), etc.), and in anesthesiology (induction anesthesia, local anesthesia). Furthermore, the present invention has application in endocrinology (cholesterol, diabetes, hormone replacement therapy, thyroid dysfunction, oral contraception, obesity, etc.), dermatology (onychomycosis, acne, rosaceae, psoriasis, etc.), rheumatology (arthritis, gout, osteoporosis / Osteomalacia), respiratory fields (asthma, emphysema, cystic fibrosis, etc.), gastro-intestinal fields (gastro-esophageal reflux disease, ulcer prophylaxis,

crohn's disease, inflammatory bowel disease, etc.), chronic renal failure (vitamin and mineral replacement, blood pressure regulation, diabetes, depression, etc.), genito-urinary (enlarged prostate / BPH, overactive bladder, erectile dysfunction, feminine yeast infections, etc.) and hematology-oncology (thromboembolous, hermatopoeisis, neoplastic disease, nausea / vomiting).

EXAMPLES XIII

The present invention can be utilized with a variety of exipients. Categories of exipients include, but are not limited to, Binders, Disintegrants Fillers (diluents), Lubricants, Glidants (flow enhancers), Compression aids, Colors, Sweeteners, Preservatives, Suspensing/dispersing agents, Film formers/coatings, Flavors, and Printing inks. Still furhter by way of example and not by limitation, the present invention can be utilized with the following exipients:

Magnesium Stearate	Povidone
Lactose	Pregelatinized Starch
Microcrystalline Cellulose	Hydroxy Propyl Methylcellulose
Starch (corn)	OPA products (coatings & inks)
Silicon Dioxide	Croscarmellose
Titanium Dioxide	Hydroxy Propyl Cellulose
Stearic Acid	Ethylcellulose
Sodium Starch Glycolate	Calcium Phosphate (dibasic)
Gelatin	Crospovidone
Talc	Shellac (and Glaze)
Sucrose	
Calcium Stearate	

EXAMPLES XIV

Examples of the supporting nutraceutical formulations are to illustrate examples where specific categories of the natural products industry can be utilized with the present invention. There are many more categories than the ones that are listed and therefore this is for simply for the purpose to show that the technology is broad and could be utilized for many specific categories. The specific mg of each product is not included due to the amounts of each material is typically based upon the formulators opinions, however there are some (RDA) recommended daily allowances that could be used to determine the formulation.

Category: Antioxidant

Primary Capsule:

d alpha Tocopherol
Beta Carotene
Tocotrineol

Grape Seed Oil

Secondary Capsule:

Selenium
Vitamin C Ester

Category: Brain Support

Primary Capsule:

d alpha Tocopherol
DHA
Omega 3
Lecithin
Choline

Secondary Capsule:

Coenzyme Q 10
Ginkgo Biloba
B 12

Category: Mood Support

Primary Capsule:

D alpha Tocopherol
Lecithin
DHA
Omega 3

Secondary Capsule:

SAME
L Tyrosine

Category: Cardio Support

Primary Capsule:

d alpha Tocopherol
Tocotrienol
Flax Oil Omega 6
Fish Oil Omega 3

Secondary Capsule:

Calcium
Magnesium
Coenzyme Q 10

Category: Diet Support

Primary Capsule:

Cojugated Linolic Acid
Flax Seed Oil

Secondary Capsule:

Chromium
Zinc
L Carnitine

Category: Immune Support

Primary Capsule:

Garlic Oil
Olive Leaf Oil
d alpha Tocopherol

Secondary Capsule:

Zinc
Echinacea

Category: Laxative Support

Primary Capsule:

Aloe Vera
Flax Seed Oil

Secondary Capsule:

Senna Leaf
Psyllium

Category: Prostate Support

Primary Capsule:

Saw Palmetto Oil
Pygeum Oil
Flaxseed Oil
Pumpkin Seed Oil

Secondary Capsule:

Selenium
Zinc
Boswellia Serrata

Category: Inflammation Support

Primary Capsule:

Boswellia Serrata Oil
Guggul Oil
Omega 3 Oil
Ginger Oil

Secondary Capsule:

Curcumin
Holy Basil

Category: Sports Nutrition / Muscle Support

Primary Capsule:

Cojugated Linolic Acid
MCT Oil

Secondary Capsule:

Zinc
Chromium
Tribulus Terrestris
19 Nor-5-Androstendione

Category: Menopause Support

Primary Capsule:

Evening Primrose Oil

Red Rasberry Oil

Secondary Capsule:

Licorice Root
Black Cohosh
Soy Isoflavones

Category: Cholesterol Support

Primary Capsule:

Sterol Esters
Guggul Oil
d alpha Tocopherol
Tocotrienol

Secondary Capsule:

Garlic Extract
Zinc

* * * * *

From the above discussion, it will be appreciated that the present invention provides novel integrated capsule delivery apparatus and methods for delivering diverse physical states (*e.g.*, solid, liquid, gas or dispersion) of a single active ingredient or medicament (*e.g.*, pharmaeceutical, biotechnical, nutraceutical, vitamin, dietary supplement, mineral or combination thereof), or a plurality of active ingredients or medicaments, in a single dosage capsular form, wherein at least two of the active ingredients or medicaments if different receiving chambers have physical states that differ. In preferred design, the encapsulation processes and multi-compartment capsular technology of the present invention may include various desirable properties such as, for example, controlling time-release of key active ingredients or medicaments, prolonging shelf-life of the active ingredients or medicaments, improving palatability, reducing overall production costs and reducing the number of capsules consumed by a patient or consumer as nutritional or therapeutic agents.

The present invention provides novel integrated capsule delivery apparatus and methods for delivering a single dosage, multi-compartment capsule comprising a capsular base and cap configuration, wherein the size and shape of the cap, relative to its sealing relationship with the base, generally eliminates or substantially reduces any potential dead space volume within the internal periphery of the capsule, thereby functionally negating the opportunity for reaction between an air bubble and one or more active ingredients introduced into the capsule and, accordingly, improving stability of the capsular ingredient(s).

The present invention may be embodied in other specific forms without departing from its spirit or essential characteristics. The described embodiments are to be considered in all respects only as illustrative, and not restrictive.

THE EMBODIMENTS OF THE INVENTION IN WHICH AN EXCLUSIVE PROPERTY OR PRIVILEGE IS CLAIMED ARE DEFINED AS FOLLOWS:

1. An encapsulation process for forming a capsule-in-capsule formulation, said process comprising the steps of:

providing a primary capsule having a base and a cap;

providing a secondary capsule having a base and a cap;

introducing only solid or semi-solid ingredients including at least one active ingredient in a solid state into said secondary capsule, formulated in a manner allowing for a time delayed dissolution and release of said solid ingredients;

positioning said cap of said secondary capsule in sealing relationship with said base of said secondary capsule;

introducing at least one liquid ingredient into said primary capsule, wherein said liquid ingredient introduced into said primary capsule is selected from an oil, a spirit, an elixir, a fluid extract, glycerin and mixtures of any of the foregoing, wherein said ingredients of said secondary capsule are different from said ingredients of said primary capsule;

introducing said secondary capsule into said base of said primary capsule; and

positioning said cap of said primary capsule in sealing relationship with said base of said primary capsule.

2. An encapsulation process as defined in claim 1, further comprising the step of reducing dead volume space within said primary capsule.

3. An encapsulation process as defined in claim 1, further comprising the step of introducing a filling material into said cap of said primary capsule to reduce dead volume space.

4. An encapsulation process as defined in claim 1, wherein said cap of said primary capsule comprises a configuration sufficient for reducing dead volume space within the primary capsule.

5. An encapsulation process as defined in claim 1, wherein said solid ingredient is formulated in a manner selected from the group consisting of a pill, a tablet, a capsule, a powder, granulation, flakes, a troche, a suppository, an ointment, a paste, an emulsion and a cream.

6. An encapsulation process as defined in claim 1, further comprising the steps of:

providing a tertiary capsule having a base and a cap;

introducing at least one ingredient into said tertiary capsule;

introducing said tertiary capsule into said base of said secondary capsule; and

positioning said cap of said secondary capsule in sealing relationship with said base of said secondary capsule.

7. An encapsulation process as defined in claim 6, wherein said tertiary capsule comprises a time-release coating.

8. An encapsulation process as defined in claim 1, wherein said primary capsule is formed of a material selected from the group consisting of gelatin, starch, casein, chitosan, soya bean protein, safflower protein, alginates, gellan gum, carrageenan, xanthan gum, phthalated gelatin, succinated gelatin, cellulosephthalate-acetate, polyvinylacetate, hydroxypropyl methyl cellulose, oleoresin, polymerisates of acrylic or methacrylic esters, polyvinylacetate-phthalate and combinations thereof.

9. An encapsulation process as defined in claim 6, wherein said primary capsule comprises a soft elastic capsule formed of a material selected from the group consisting of glycerin and sorbitol.

10. An encapsulation process as defined in claim 9, wherein said soft elastic capsule includes an antimicrobial selected from the group consisting of paraben and sorbic acid.

11. An encapsulation process as defined in claim 1, wherein said ingredient introduced in said primary capsule has a moisture content in the range of 0% to 6% by weight of the total weight of the capsule.

12. An encapsulation process as defined in claim 11, wherein said ingredient introduced in said primary capsule has a moisture content in the range of 0% to 3% by weight of the total weight of the capsule.

13. An encapsulation process as defined in claim 1, wherein said primary and secondary capsules contain at least one pharmaceutically acceptable lubricant in the range of 0% to 10% by weight of the total weight of the capsule.

14. An encapsulation process as defined in claim 13, wherein said lubricant is selected from the group consisting of aluminiumstearate, calciumstearate, magnesiumstearate, tinstearate, talc, sodium lauryl sulfate, lecithins, mineral oils, stearic acid, silicones and combinations thereof.

15. A multi-compartment capsule, comprising:

a first receiving chamber comprising a liquid selected from an oil, a spirit, an elixir, a fluid extract, glycerin and mixtures of any of the foregoing, the liquid containing an active ingredient in immediate release form; and

a second receiving chamber comprising only solid or semi-solid ingredients and comprising at least one active ingredient in a solid state formulated in a manner allowing for a time delayed dissolution and release of said solid ingredients, wherein the ingredients contained in said first receiving chamber are different from the ingredients of said second receiving chamber, and wherein said second chamber is enveloped by said first receiving chamber.

16. A multi-compartment capsule as defined in claim 15, wherein said first receiving chamber has no dead space.

17. A multi-compartment capsule as defined in claim 15, further comprising a base and a corresponding cap, wherein said cap is configured to provide a sealing relationship when engaging said base.

18. A multi-compartment capsule as defined in claim 17, wherein said cap is configured to reduce dead volume space within said first receiving chamber.

19. A multi-compartment capsule as defined in claim 17, further comprising a filling material introduced into said cap to reduce dead volume space within said first receiving chamber.

20. A multi-compartment capsule as defined in claim 15, wherein said active ingredient in said first receiving chamber is selected from the group consisting of a pharmaceutical, a biotechnical, a nutraceutical, a vitamin, a dietary supplement and a mineral, and wherein said active ingredient in said second receiving chamber is selected from the group consisting of a pharmaceutical, a biotechnical, a nutraceutical, a vitamin, a dietary supplement and a mineral.

21. A multi-compartment capsule as defined in claim 15, wherein said active ingredient in said first receiving chamber comprises a pharmaceutical and said active ingredient in said second receiving chamber comprises a nutraceutical, a vitamin, a dietary supplement or a mineral.

22. A multi-compartment capsule as defined in claim 15, wherein said solid ingredient is formulated in a manner selected from the group consisting of a pill, a tablet, a capsule, a powder, granulation, flakes, a troche, a suppository, an ointment, a paste, an emulsion and a cream.

23. A multi-compartment capsule as defined in claim 15, wherein at least one of said receiving chambers comprises a time-release coating.

24. A multi-compartment capsule as defined in claim 15, further comprising a third receiving chamber comprising at least one ingredient.

25. A multi-compartment capsule as defined in claim 24, wherein said ingredient in said third receiving chamber is selected from the group consisting of a pharmaceutical, a biotechnical, a nutraceutical, a vitamin, a dietary supplement and a mineral.

26. A multi-compartment capsule as defined in claim 25, wherein said ingredient in said third receiving chamber is different than the ingredients in said first and said second receiving chamber.

27. A multi-compartment capsule as defined in claim 15, wherein peppermint is included in the first or second chamber.

28. The multi-compartment capsule of claim 15, wherein the second receiving chamber contains Vitamin E as an active ingredient.

29. The multi-compartment capsule of claim 15, wherein the first receiving chamber contains Glucosamine/Chondroitin.

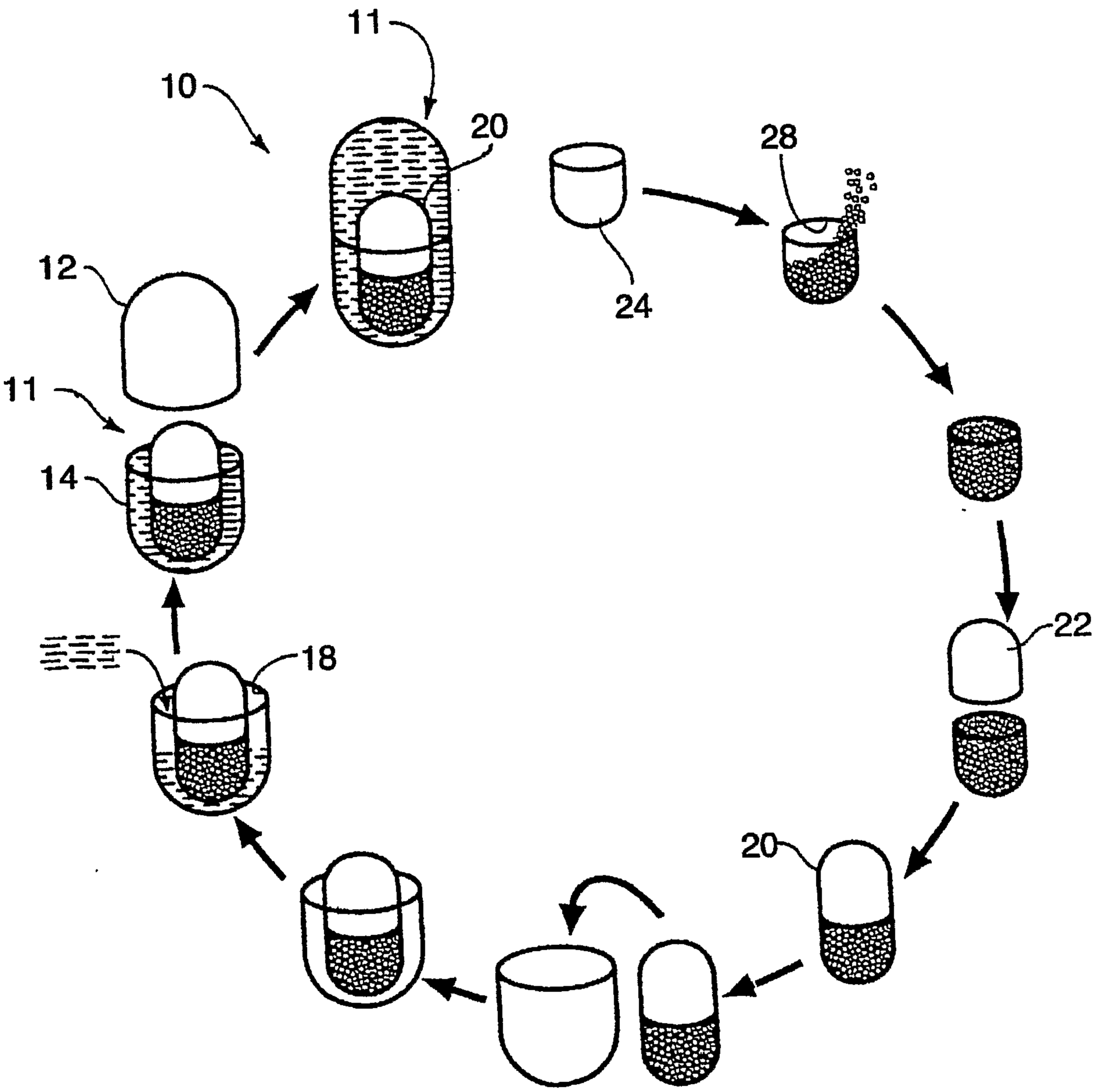

FIG. 1

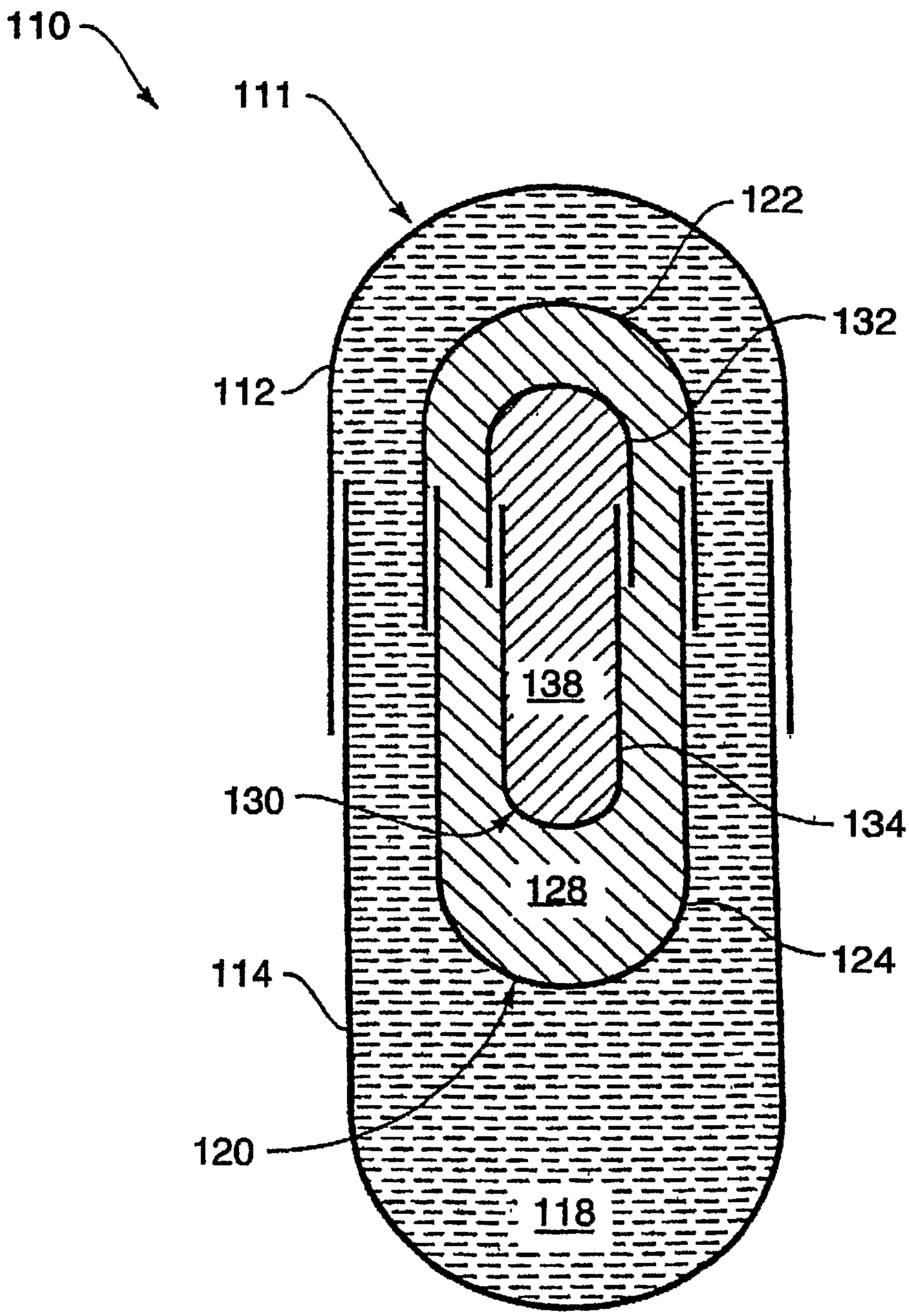

FIG. 2

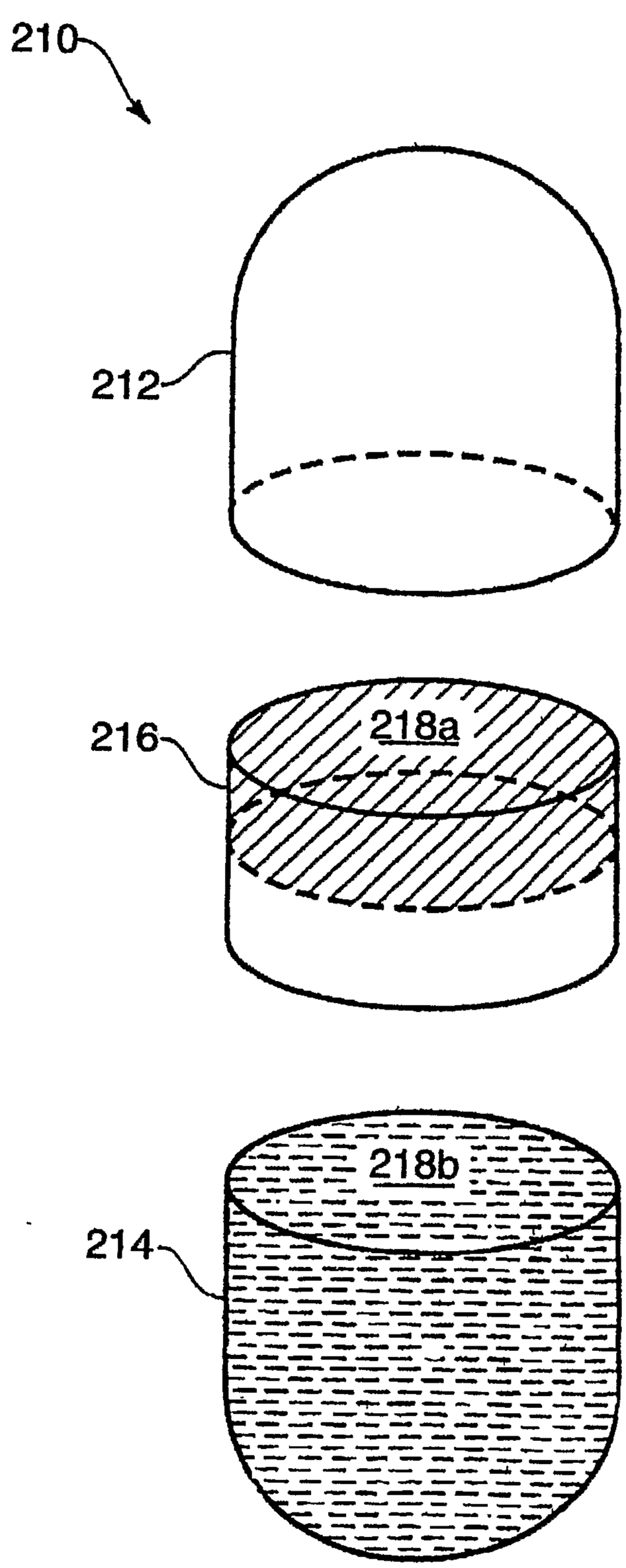

FIG. 3

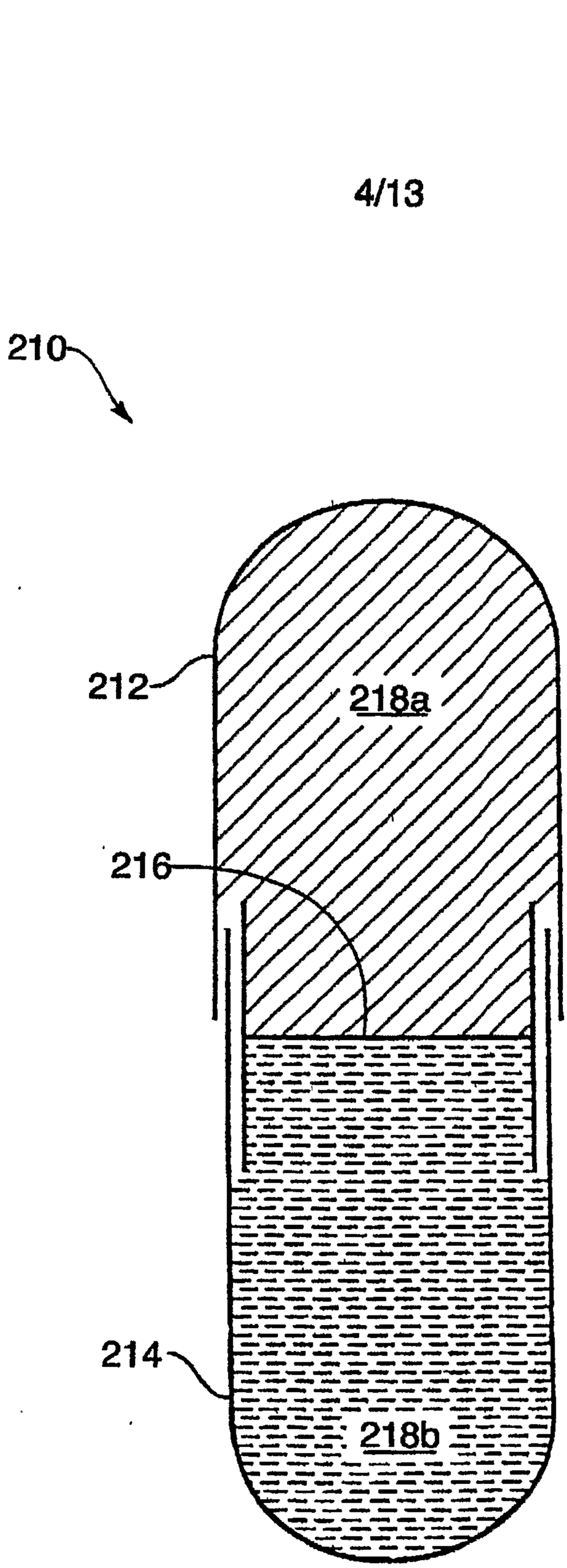

FIG.4

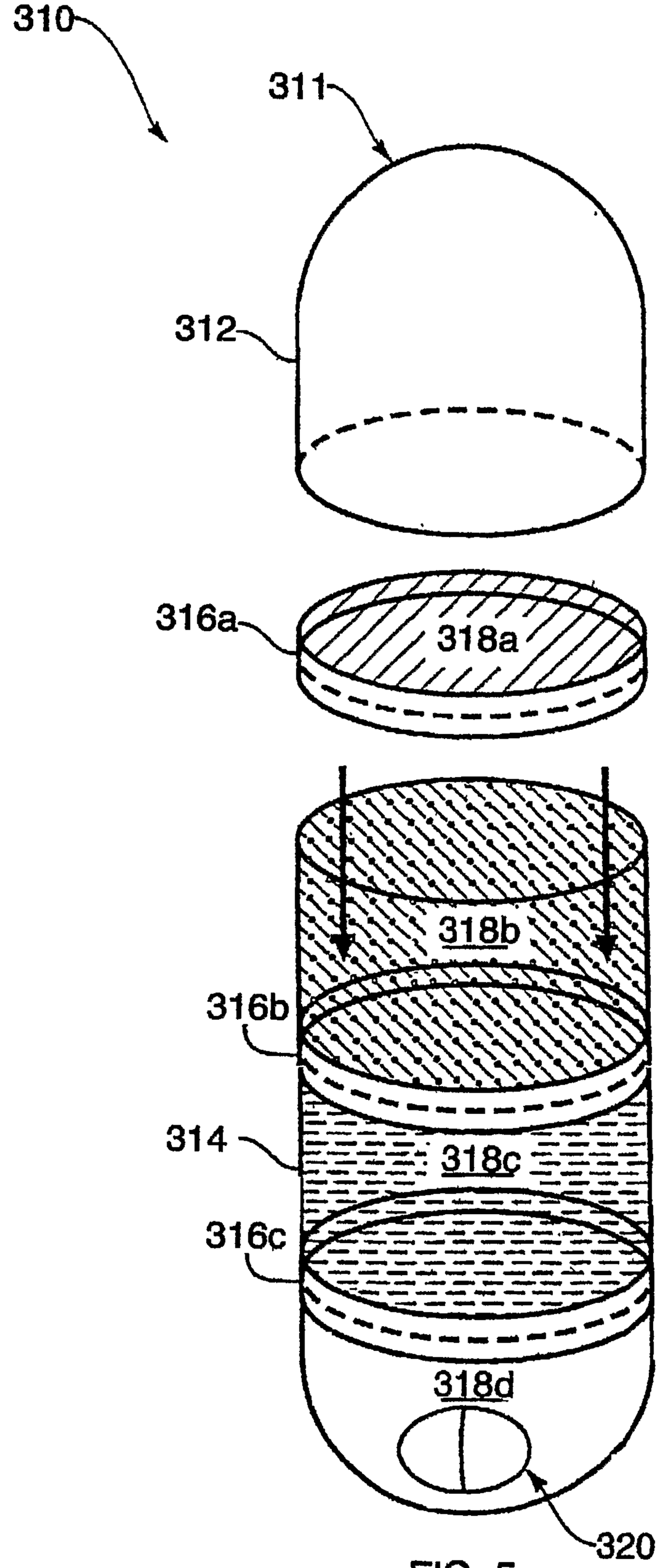

FIG. 5

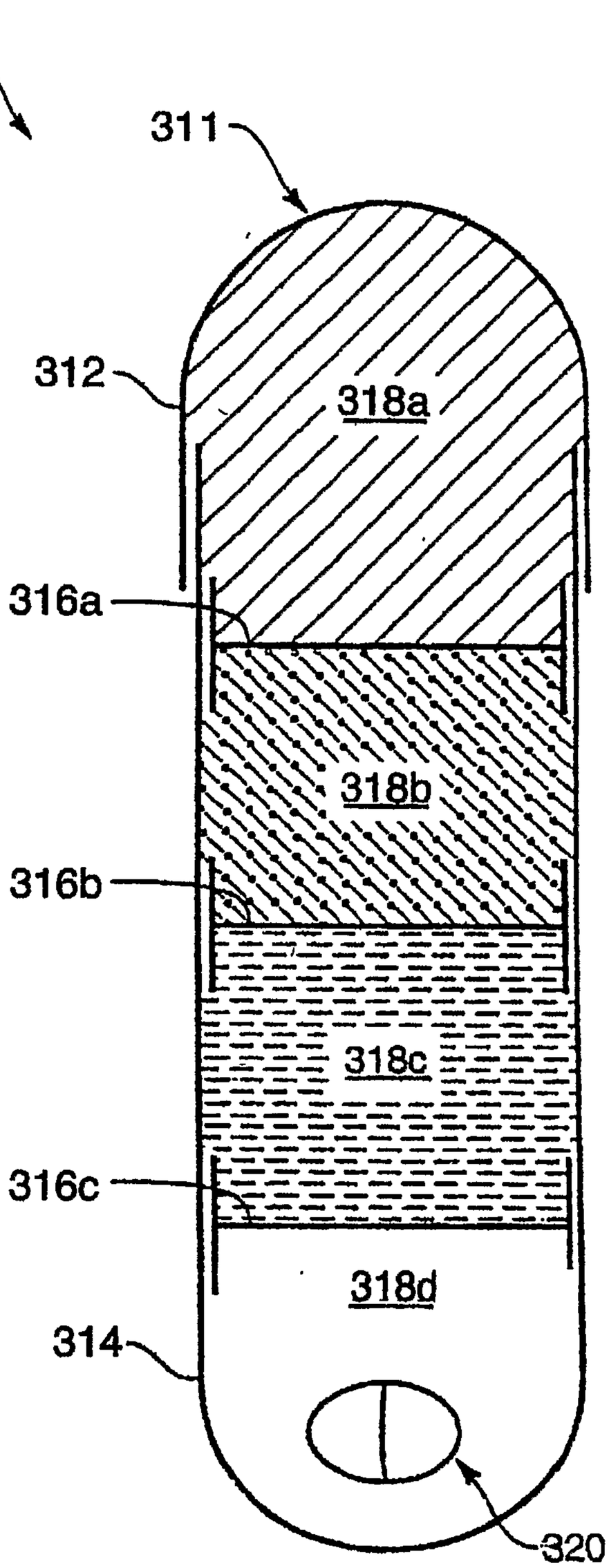

FIG. 6

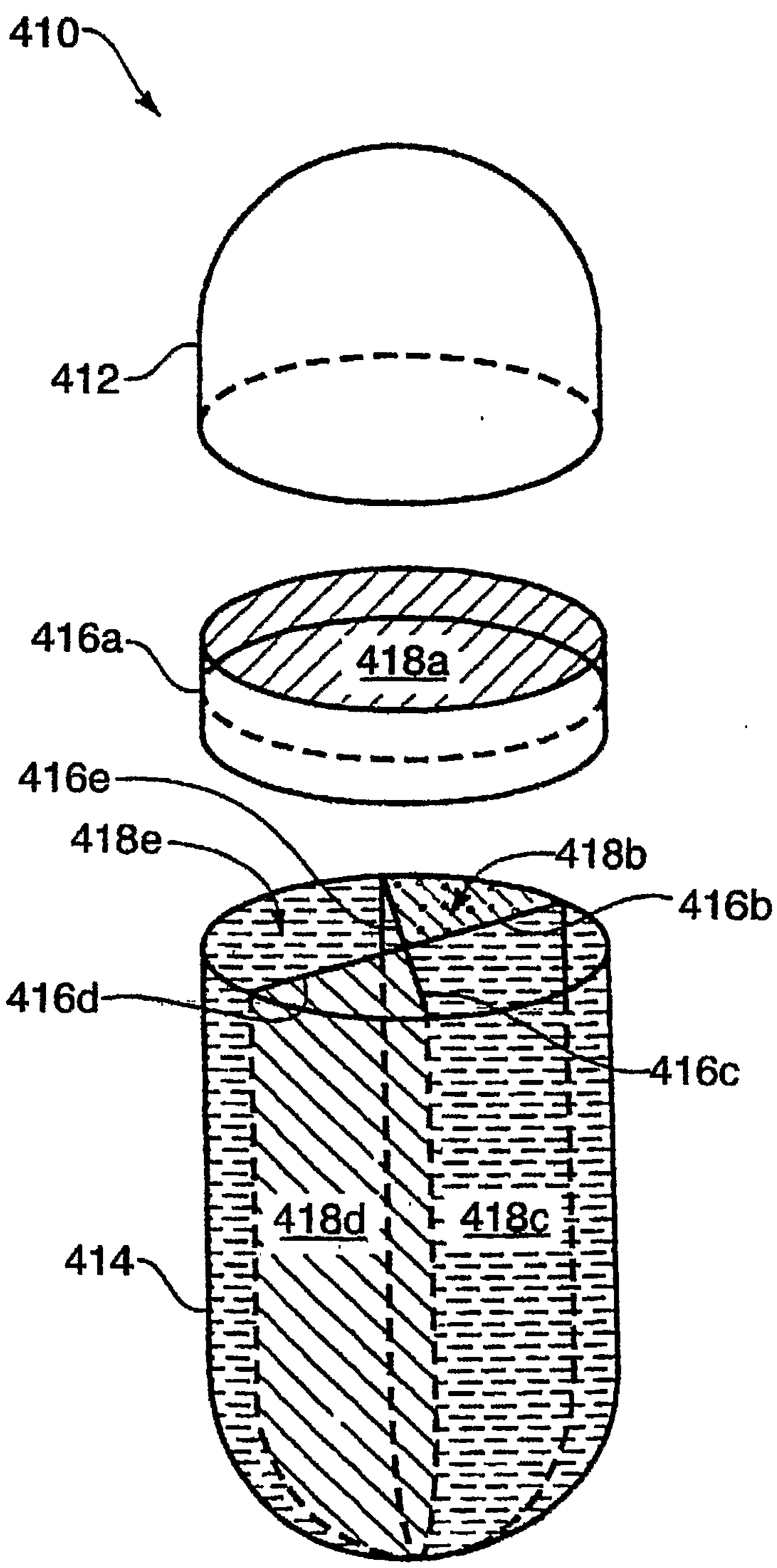

FIG. 7

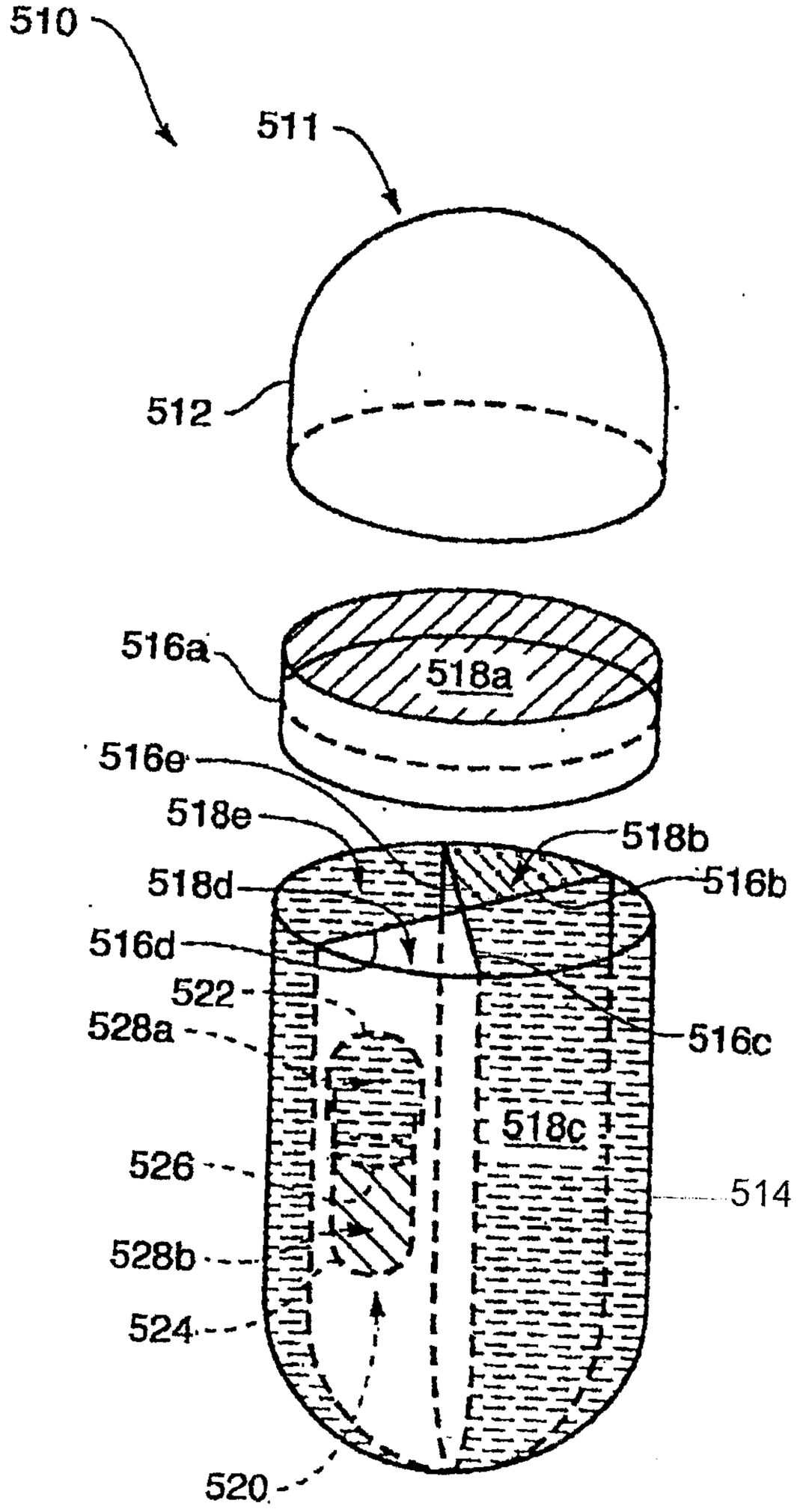
510
511
512
516a
518a
516e
518e
518b
518d
516b
516d
522
528a
516c
518c
526
514
528b
524
520

FIG.8

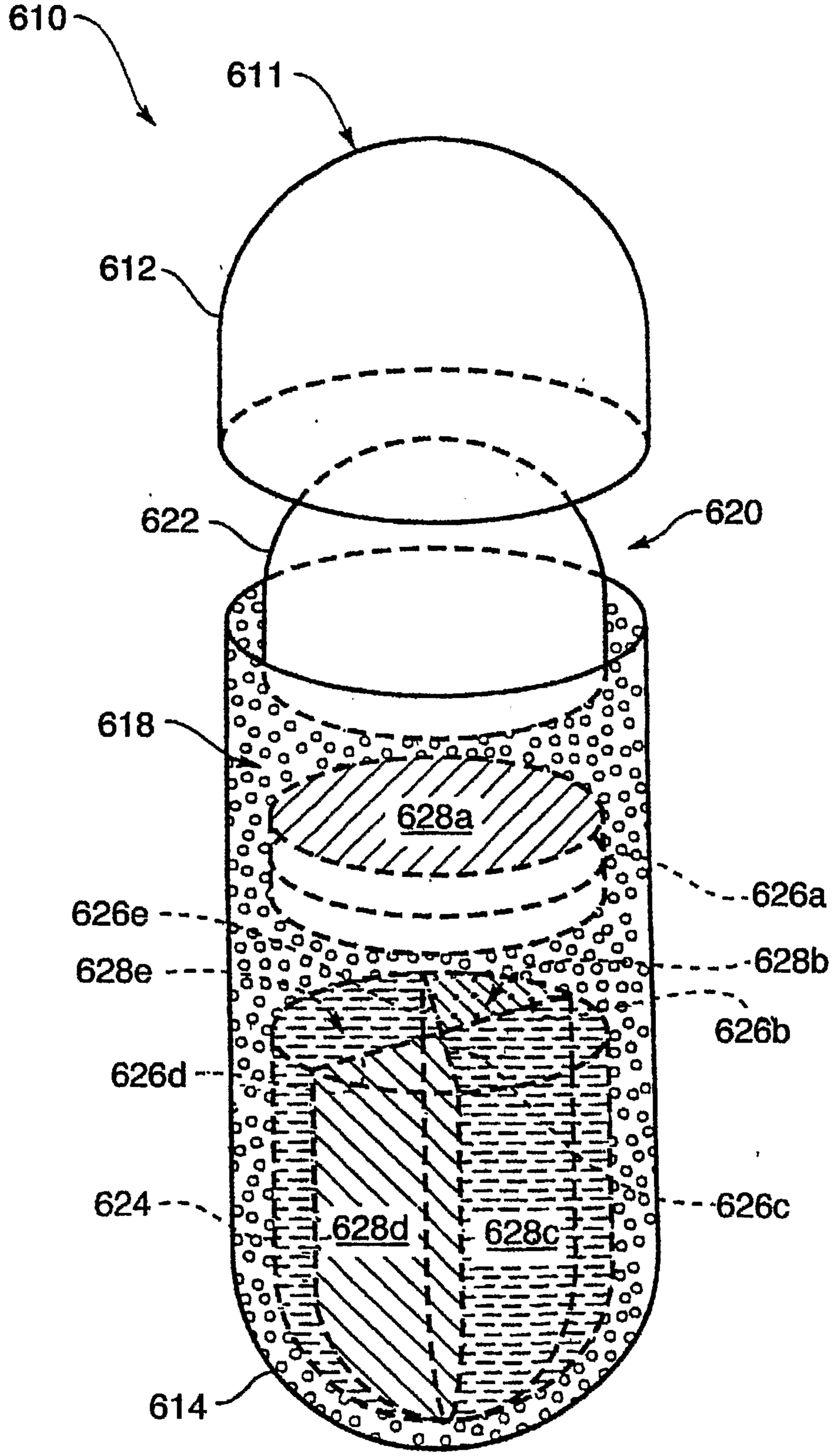
610
611
612
622
620
618
628a
626a
626e
628e
628b
626b
626d
624
628d
628c
626c
614

FIG. 9

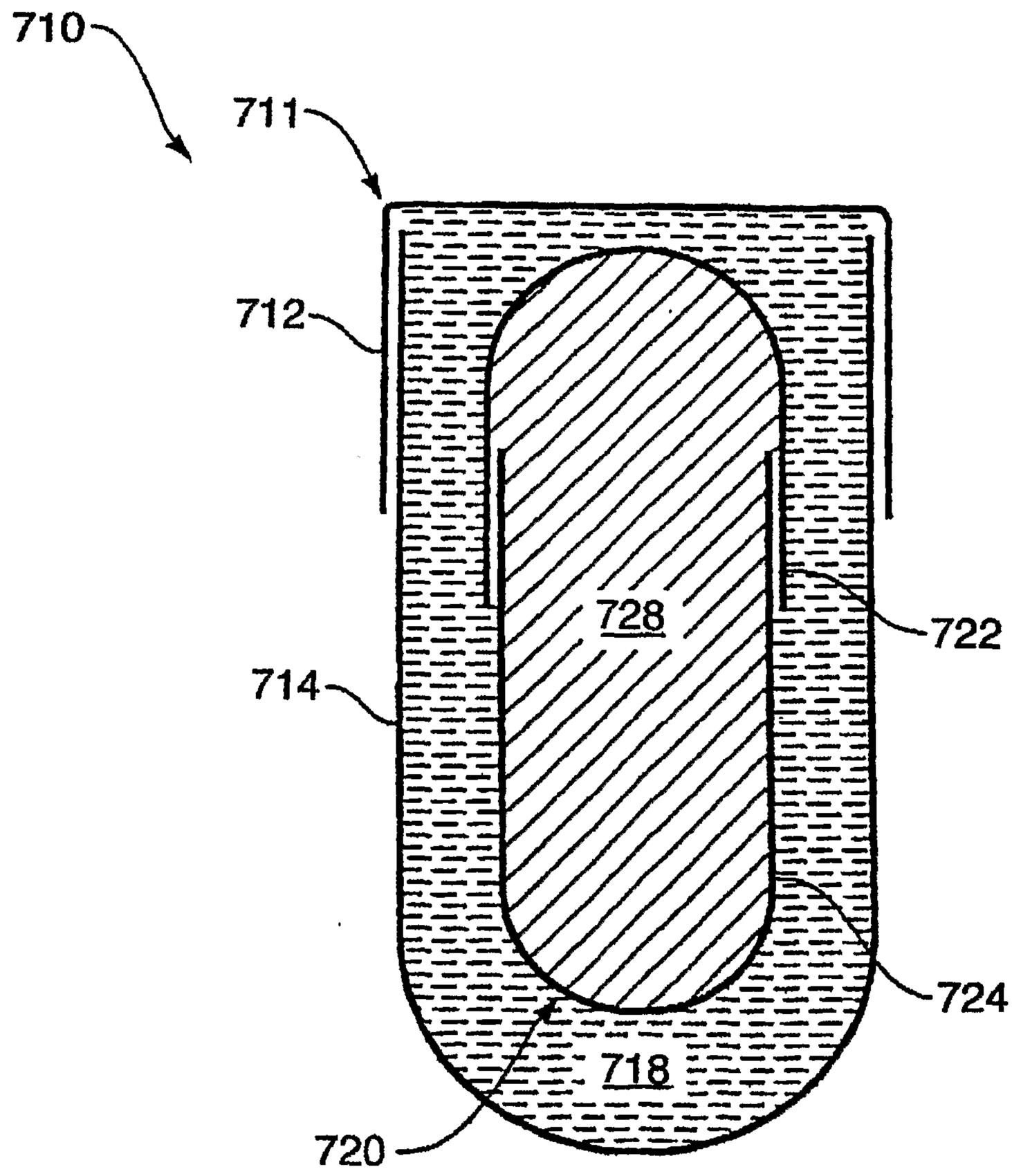

FIG. 10

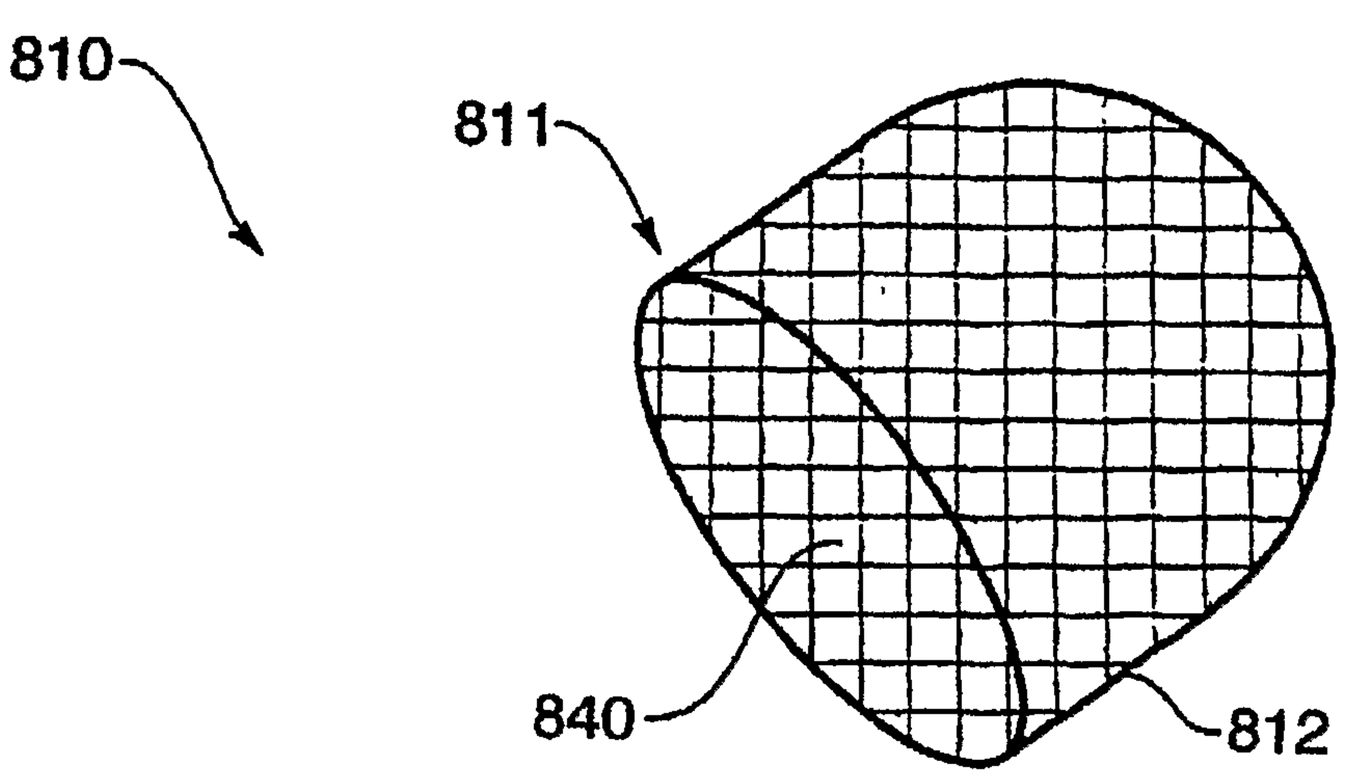

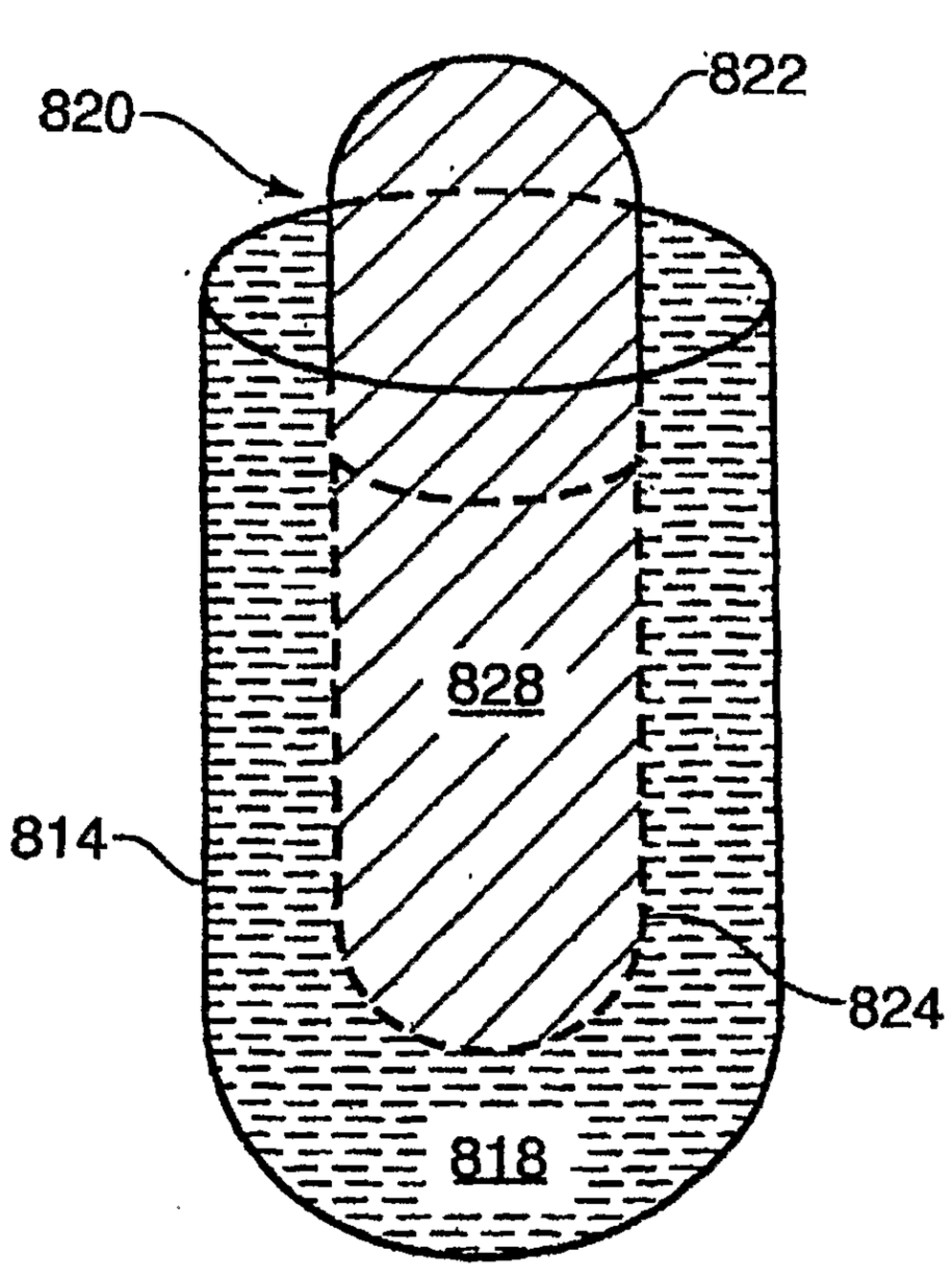

FIG. 11

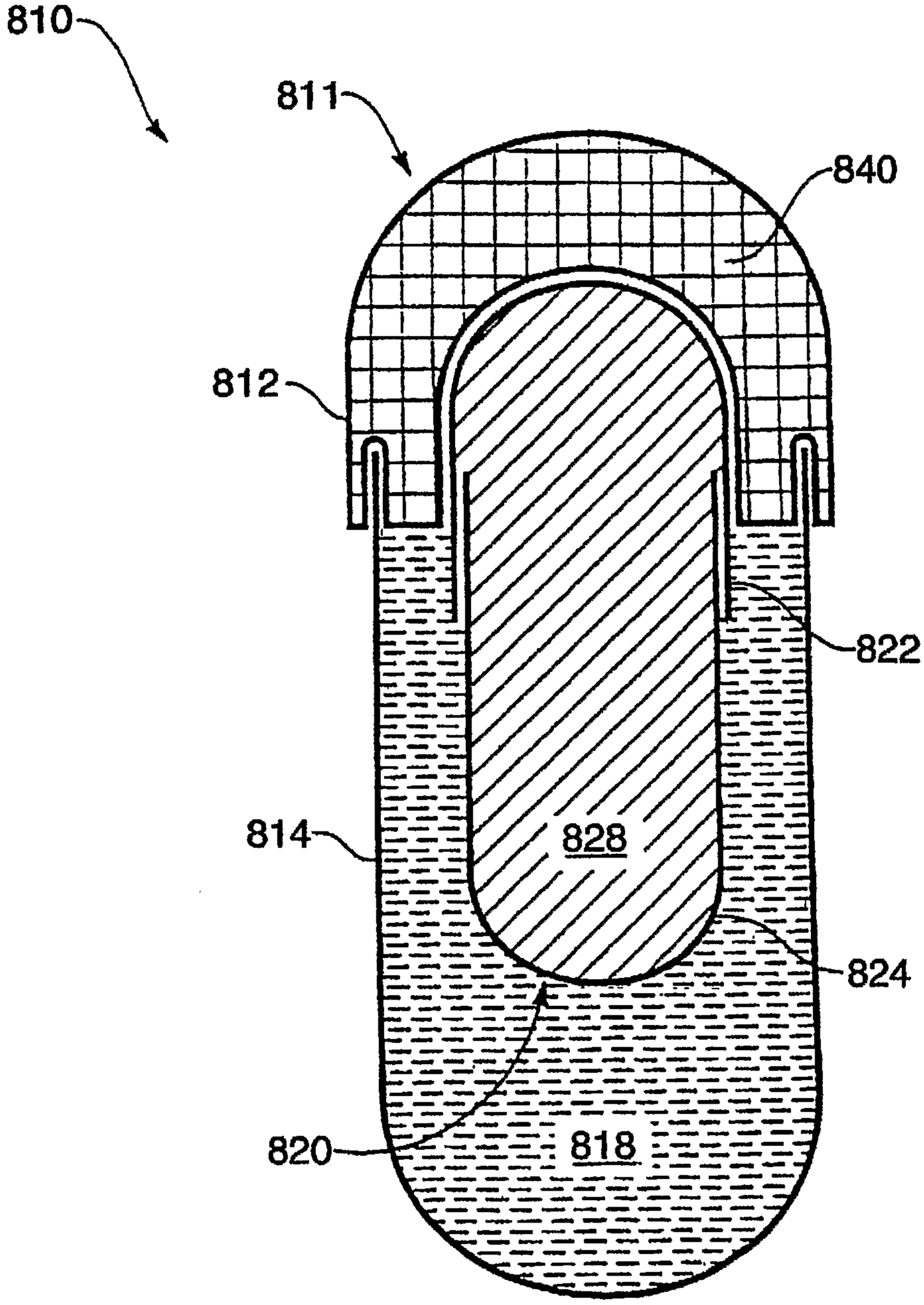

FIG. 12

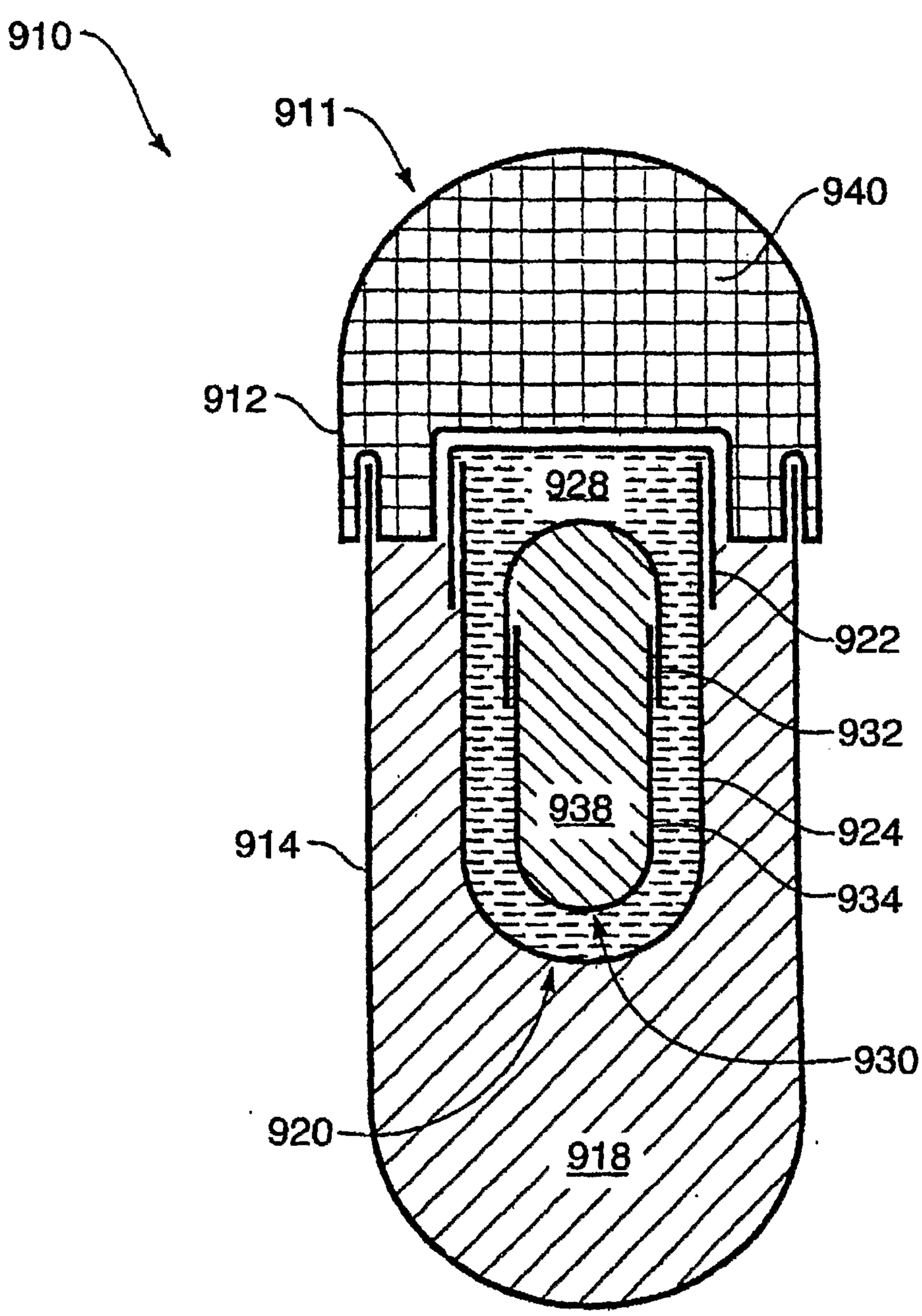

FIG. 13