Oct. 19, 1954 S. H. MORSE 2,692,119

SPIRALLY WOUND REFRIGERATION EVAPORATOR

Filed Feb. 26, 1952 3 Sheets-Sheet 1

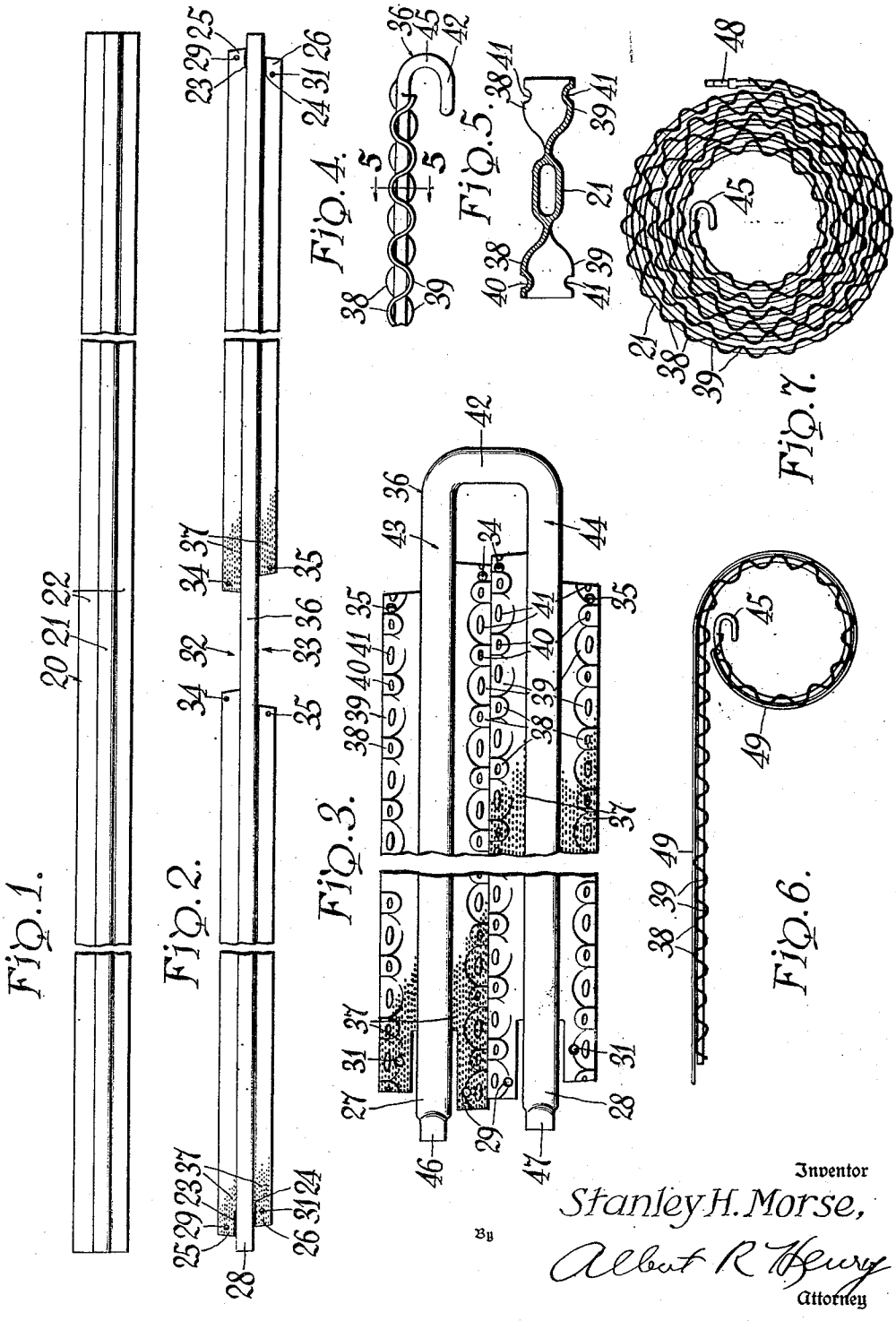

Inventor
Stanley H. Morse,
By Albert R. Henry
Attorney

Oct. 19, 1954 S. H. MORSE 2,692,119

SPIRALLY WOUND REFRIGERATION EVAPORATOR

Filed Feb. 26, 1952

3 Sheets-Sheet 2

Fig. 8.

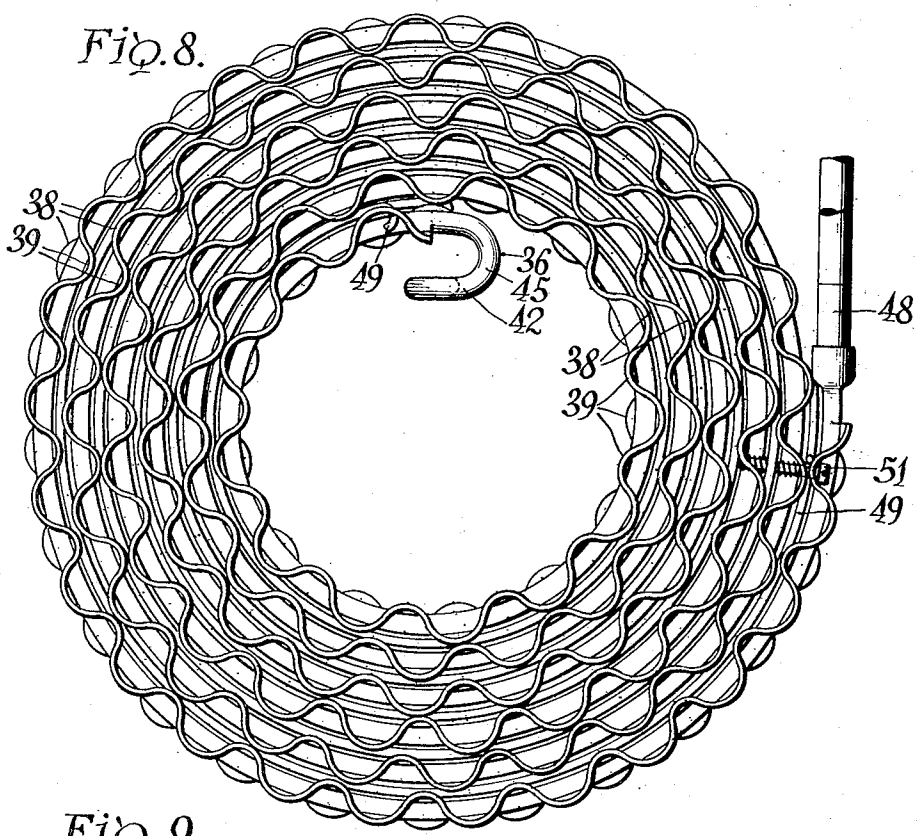

Fig. 9.

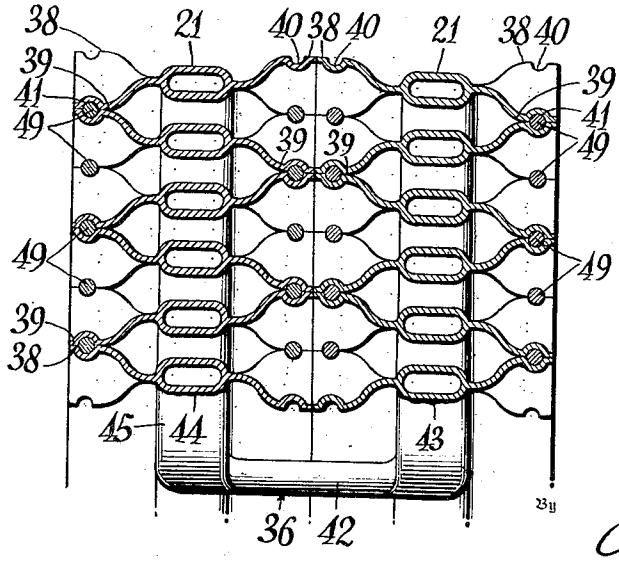

Fig. 10.

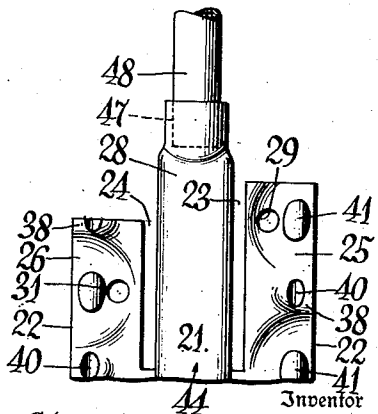

Inventor

Stanley H. Morse,

Albert R. Kenny

Attorney.

Oct. 19, 1954 S. H. MORSE 2,692,119

SPIRALLY WOUND REFRIGERATION EVAPORATOR

Filed Feb. 26, 1952 3 Sheets-Sheet 3

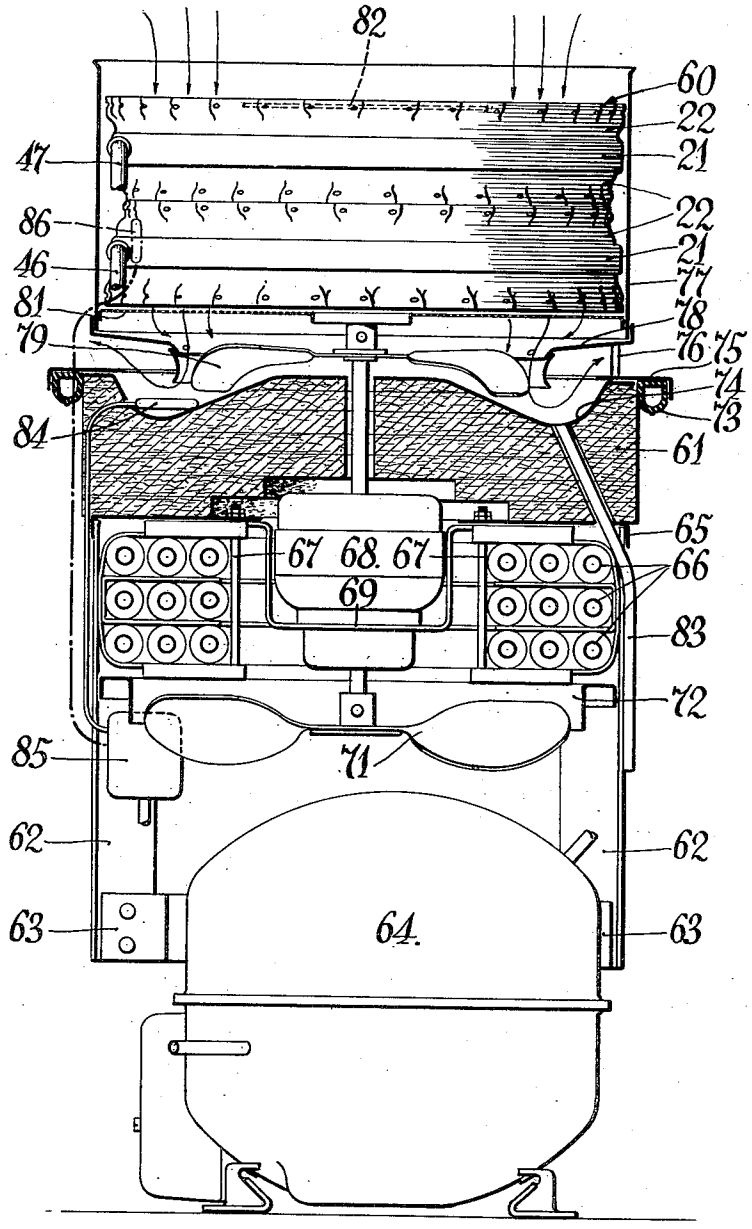

Fig. 11.

Inventor
Stanley H. Morse,
By Albert R. Henry
Attorney

Patented Oct. 19, 1954

2,692,119

UNITED STATES PATENT OFFICE

2,692,119

SPIRALLY WOUND REFRIGERATION EVAPORATOR

Stanley H. Morse, Manitou Beach, Mich., assignor to Addison Products Company, Addison, Mich.

Application February 26, 1952, Serial No. 273,409

5 Claims. (Cl. 257—248)

1

This invention relates to a heat exchange coil especially suited for use as a refrigeration evaporator, and it is particularly concerned with a spirally wound tubing formed with extended secondary heat transfer surface, and wherein the convolutions of the coil are fixedly spaced and bound with respect to each other.

It has heretofore been proposed to form a refrigeration coil by winding a length of tubing into spiral form, and it has also been proposed to utilize extruded aluminum tubing for such coil, wherein the tubing is formed with longitudinal fins to increase the heat transfer capacity. Such proposals have not, however, heretofore met with general favor in the refrigeration industry, as it has been considered that the heat transfer capacity and efficiency were relatively low, and that the manufacture of such coils involved undue expense.

I have discovered, however, that a highly efficient heat transfer unit of the type described may be made by means of novel improvements in the structure thereof, providing a compact and durable coil, and one which may be made economically and without expensive equipment. My improved coil, a satisfactory mode of fabrication, and a typical application thereof to refrigeration service, will be described with reference to the accompanying drawings, wherein:

Fig. 1 is a plan of a length of tubing stock from which the coil is made, prior to any of the forming operations;

Fig. 2 is a view similar to Fig. 1, showing some of the initial steps of manufacture;

Fig. 3 is a view on an enlarged scale, showing further fabricating steps;

Fig. 4 is a fragmentary side elevation, on a reduced scale, of the right hand end of the tubing shown in Fig. 3;

Fig. 5 is an enlarged section on the line 5—5 of Fig. 4;

Fig. 6 is a side elevation, showing the formed tubing at the beginning of the winding operation;

Fig. 7 is a side elevation of the completely wound coil;

Fig. 8 is an enlarged side elevation of a completely wound and finished coil;

Fig. 9 is a fragmentary radial section, on an enlarged scale, of the coil shown in Fig. 8;

2

Fig. 10 is a fragmentary view of an outer end of the coil shown in Fig. 8; and

Fig. 11 is a view, partly in elevation and partly in section, showing the improved coil as utilized as an evaporator in a self-contained refrigeration machine.

Referring first to Figs. 1 to 7, there is shown in Fig. 1 a suitable straight length of tubing 20, which advantageously is composed of aluminum which has been extruded by known processes, and which comprises an axial tubular portion 21 of flat or slightly oval cross section, and two integral fins 22 disposed longitudinally of the tube 21 and along the narrow dimension thereof. The fins 22 are initially notched or slotted at the ends of the tubing, as indicated by the reference numerals 23 and 24, and limited portions of the fins are also cut away to provide relatively free tabs, as indicated by the numerals 25 and 26, and tube end portions 27 and 28. Holes 29 and 31 are also punched in the tabs 25 and 26.

Portions of the fins 22 are also removed substantially midway of the free ends 27 and 28, as indicated by the reference numerals 32 and 33, and holes 34 and 35 are punched in the fins adjacent their central ends. It will be noted that the cut-away portions of the fins 22 are of unequal length. It may here also be noted that the complete coil, as specifically to be described, is a "double coil," that is, one wherein there are two superimposed spiral sections interconnected by the integral portion of tubing 36. It will be apparent that in making a single coil, the severance of fin stock at the central portion of the tube length need not be undertaken. The length of tubing 20 is then passed through spaced pairs of knurling rollers, or is treated by equivalent means, to roughen the surfaces and to form small indentations or ripples over the surfaces of the fins 22, as indicated by the reference numeral 37.

The fins 22 are then corrugated or formed into recurrent wavy portions, to displace the metal as shown in Figs. 3, 4, and 5. This operation, which may readily be effected by spaced pairs of suitably contoured roller dies, draws or stretches the metal outwardly from the junction of the fins 22 with the tube 21 to the margins of the fins, thereby progressively reducing its thickness and increasing its length. Concurrently, the fin stock is forced upwardly and downwardly, with respect

to the tube 21, to provide crest portions 38, 39, projecting above and below the longitudinal axis of the tube, and thus deform the fins from their original plane configuration into substantially sinusoidal shape.

It will be noted, from Figs. 3 and 5 (as well as from the enlarged view of Fig. 9) that the amplitude or vertical displacement of the fin stock increases from nothing at the junction of the fins with the tube 21 to a maximum at the margins. It will further be noted that the crests 38, 39 of the fin 22 on one side are offset from or staggered with respect to the crests of the fin 22 on the opposite side of the tube 21, or, stated otherwise, the sinusoidal waves are substantially 180° out of phase. The outwardly increasing amplitude of the wavy fins is such that approximately fifty to sixty per cent of the displaced metal is above or below parallel lines drawn through the outside minor axis of the tube 21.

A further and important feature of the corrugated fins is the formation of reentrant flutes or saddles 40, 41, at the apices of the crests 38, 39. These saddles, as shown in Fig. 5, are semicircular in section, having a maximum radius directly at the crests which diminishes axially because of the undulatory nature of the fins. The saddles are located adjacent the margins of the fins, and, for best results, their maximum depth or radius is such that a line drawn through their bases, parallel to the outer surface of the tube 21, will be slightly spaced from the tube, rather than intersect it.

In fabricating a double coil, the central tube section 36 is placed against a suitable bending tool, and is bent in its own plane, hairpin fashion, to form a return bend 42. This will bring the right and left hand portions of the tubing 20 into parallelism, to provide two runs 43, 44, as shown in Fig. 3, and with the adjacent fins 22 of such runs either in light contact, or slightly spaced, depending upon the extent of bending. The focal point of bending the tube section 36 is subject to some variation. As shown in Fig. 3, it has been so displaced from a "center" that the crests 38, 39 of the run 43 are slightly staggered or out of phase with the crests of the run 44. By bending on "center," it will now be apparent that the crests of one run may be aligned with the crests of the other run, either on the adjacent or remote fins 22.

The return bend 42 is next bent again, downwardly with respect of the plane of the tubing 20, to form a curvilinear bend 45, as shown in Figs. 6 and 7. The bend as herein illustrated is a double return bend or hook, which may be utilized for some service applications, but such bend may also be of less extent, and no more than that required to conform it to the curvature of the spiral coil being fabricated.

The free ends 27 and 28 of th tube 21 are worked into circular section, to form sockets 46 and 47 adapted to receive pieces 48 of aluminum tubing, by means of which the coil may be brazed to copper tubing customarily utilized in refrigeration circuits. Wires 49, preferably of greater diameter than that of the saddles 40 and 41, are next laid along the fins 22, and their ends are hooked into the holes 34 and 35 which are adjacent the return bend 42. The tubing portions 43 and 44 are then simultaneously wound on themselves to form a spiral coil, wherein the wires 49 seat in the circumferentially aligned saddles, thereby to maintain a uniform spacing of the successive convolutions, and to retain them against axial displacement. The spiral does not start from its geometric center, but some radial distance therefrom, as the views clearly show. This forms a hollow core which, in some instances, may be employed to house a small motor, or, in other instances, may be blocked with a solid disc, or, in others, be permitted to remain as it is. The coil essentially satisfies the equation of the Archimedean spiral, inasmuch as the radius at any point is directly arithmetically proportional to the arc swept out to reach such point.

As noted at the outset, Figs. 8, 9, and 10 illustrate the completed double coil on an enlarged scale. After the coil has been completely wound, self tapping screws 51 may be driven through the holes 29 and 31 into the underlying fin stock, and the ends of the wires 49 may be bent around them, thereby to secure the assembly from any tendency to unwind itself. It will be seen that the crests of the convolutions of the fins 22 are only occasionally and randomly aligned, due to the fact that the radius of the coil progressively increases from convolution to convolution. It is also to be noted that, with spacing wires 49 of constant diameter, the spacing between the successive convolutions is constant, and thus the air flow or resistance to flow through the core is substantially uniform over its entire surface. In addition to establishing such uniformity, the wires divide the air stream into paths directed toward the surfaces of the tubes 21, and over the surfaces of the fins 22, thus assuring maximum contact and therefore good heat transfer. Inasmuch as the wires 49, when connected at their ends to the fins, lock the convolutions together against displacement in any direction, there is no need for special clamps or fixtures to make the coil ready for mounting in a refrigeration machine.

The wires 49 may be of such diameter as is desired to provide the desired spacing of the convolutions. As shown in Fig. 8, for example, they have the same radius as that of the saddles 40 and 41, so that the crests 38 and 39 would contact, if they were aligned. It may here be noted that Fig. 8 is a conventionalized radial section, in which such alignment is suggested, but this is due to the difficulty in showing misalignments of the crests in a two-dimensional pen and ink sectional view. It will also be apparent from Figs. 8 and 9 that the air paths from face to face of the coil are not normal to such faces, but follow courses which are inclined both upwardly and downwardly and laterally with respect to such faces.

The described double spiral coil is designated in Fig. 11 generally by the reference numeral 60, wherein it is shown as an evaporator for a self-contained or "package" type refrigeration system, particularly adapted for the cooling of large quantities of air on a non-frost cycle. As unit machines of this general nature are well known, it is deemed unnecessary to illustrate in detail the customary refrigerant circuit and electrical connections. Briefly described, the unit comprises a bulkhead 61 of square or circular section, adapted to be inserted in an opening in a wall or floor of the cabinet or room to be cooled. On one side of the bulkhead are depending supports 62 connected to flanges 63 welded to a hermetic compressor 64. A centrally apertured plate 65 is secured to the lower face of the bulkhead 61, and an annular condenser

66 formed of finned tubing is secured to the plate 65 by bolts 67.

A motor 68 is also mounted on the plate 65 by means of a bracket 69, and the lower end of its double ended shaft carries a fan 71 adapted to revolve in a shroud 72 mounted on the supports 62. It will be obvious that upon operation of the motor 68, the fan 71 will circulate air over the compressor and condenser, thereby cooling the high side of the system. So much of the machine is, of course, intended to be disposed outside of the space to be cooled, and leakage of heat from the high side into the conditioned space is precluded by the insulated bulkhead 61 and a sealing gasket 73 disposed around its perimeter.

The upper surface of the bulkhead 61 is dished to receive a similarly contoured centrally apertured metal plate 74, over which is disposed a mounting plate 75. Brackets 76 connected to the plate 75 support a cylindrical housing 77 which encircles the evaporator coil 60. The lower end of the housing 77 is partially closed by a centrally apertured shroud ring 78, within which revolves a fan 79 secured to the shaft of the motor 68 which projects through the bulkhead 61. A wire screen 81 extends across the housing 77 below the evaporator 60 and above the shroud 78, and a circular disc 82 is positioned in the upper open end or core of the evaporator coil to insure that substantially all of the air circulated thereover will pass between the convolutions thereof.

In operation, the fan 79 induces a flow of air through the open top of the housing 77, through the convolutions of the coil 60 in contact with its knurled and corrugated fins 22, through the shroud 78 and outwardly over the dished plate 74. Moisture condensing on the coil 60 drains through the screen 81 and onto the plate 74, for disposal through a tube 83 in any desired manner. The cycling of the compressor 64 may be controlled by a customary thermostatic switch, whose power element bulb 84 is positioned in the dished plate 74, thereby making the operation primarily responsive to emergent air temperature. The tubing ends 46 and 47 of the coil 60 are connected to the supply line from the condenser 66 and to the compressor suction line in the usual manner.

While, as noted above, the present machine is intended to operate on a non-frost cycle, and with a surface temperature of the coil 60 above freezing, conditions are frequently encountered when some frost will form on the coil. To effect its removal in a substantially automatic manner, a second thermostatic control switch is provided in the relay box 85, and its power element 86 is disposed between adjacent convolutions of the coil 60 in contact with their surfaces. This switch is adjusted to open the compressor motor circuit if the surface temperature of the coil 60 drops to a point where frost is formed, and thus override the action of the bulb 84. The ice may then melt, and any loose pieces of ice are retained on the screen 81 until they melt, and are accordingly prevented from dropping onto the blades of the fan 79.

It will be seen that the described spiral coil evaporator 60 lends itself effectively to refrigeration applications where a highly compact and efficient system is desired. Inasmuch as the capacity of a refrigeration machine depends, among other things, upon the length of the evaporator tubing and the extent of secondary surface, the present evaporator provides a coil having both adequate length and fin area to provide for high capacity in a unit of limited volume. Extended secondary surface is provided in the present coil by corrugating the fins 22, and further secondary surface is provided by the wires 49, which perform the several functions of mechanically bonding the convolutions of the coil, preventing axial displacements, adding strength and preventing noisy vibrations of the convolutions by the motion of the air stream, dividing the air into paths directed against the fins and tube 21, and also accepting heat from the fins for delivery directly to the air.

It may be additionally noted that inasmuch as the coil is relatively rigid when wound, no special spacing or retaining means are required to hold the convolutions in their desired relationship. The knurling or roughening of the surfaces of the fins 22 enhances the heat transfer capacity, and also reduces the surface tension effect between condensing moisture and the fins and tube, thereby enabling the coil to drain rapidly and remove films of moisture which otherwise would impede heat transfer.

It is therefore believed to be clear that the present invention provides a highly efficient heat exchange coil, which, when employed either as a single or multiple coil, supplies adequate tube length and secondary surface for the capacities of the other elements of the refrigeration machine. While the invention has been described with reference to a preferred embodiment, a method for its manufacture, and a typical application, it is to be understood that the scope of the invention is to be deemed commensurate with that of the following claims.

I claim:

1. A heat exchange coil comprising a continuous length of tubing formed with integral fins extending lengthwise along diametrically opposed portions thereof, said fins being corrugated outwardly from the tubing to their margins into substantially sinusoidal formations of increasing amplitude, reentrant saddles formed in the crests of the corrugations, said saddles being located adjacent the margins of the fins and being aligned lengthwise thereof, wires positioned in said saddles and anchored to the ends of the fins, said tubing, fins, and wires being wound spirally into a coil having a plurality of convolutions, said wires engaging the saddles of the fins of adjacent convolutions and spacing and retaining said convolutions from displacement.

2. A spiral heat exchange coil as set forth in claim 1, wherein the crests of the convolutions of the opposed fins are staggered with respect to each other lengthwise of the tubing.

3. A spiral heat exchange coil as set forth in claim 1, wherein the surfaces of the fins are formed with small indentations to provide roughened surfaces on said fins.

4. A spiral evaporator coil as set forth in claim 1, wherein the continuous length of tubing is formed with a return bend substantially midway between its ends, thereby to form a double coil having sections disposed alongside of each other.

5. A spiral heat exchange coil comprising a continuous length of relatively flat tubing formed on opposite sides thereof with integral fins extending longitudinally and along its narrow dimension, said fins being corrugated into an undulatory contour along their margins progressively diminishing to their junctions with the tubing, the crests of said corrugations being dis-

posed above the flat surfaces of the tubing along their margins and being staggered with respect to each other on opposite sides of the tubing, transversely arcuate reentrant saddles formed in the crests and being aligned lengthwise of the fins, said tubing and fins being wound into a spiral having its innermost convolution spaced from the geometric center of the coil, said fins having spacing wires of uniform diameter in said saddles of each fin to maintain the convolutions in fixed position relative to each other and to provide unit air passageways between the convolutions axially of the coil of substantially constant size, said wires having a diameter at least as great as that of the saddles, means for anchoring the ends of the wires to the fins, said fins being lightly knurled to provide roughened surfaces on said fins.

References Cited in the file of this patent

UNITED STATES PATENTS

Number	Name	Date
1,822,068	Summers	Sept. 8, 1931
2,241,186	Coons	May 6, 1941
2,347,957	McCullough	May 2, 1944

FOREIGN PATENTS

Number	Country	Date
239,413	Germany	Apr. 15, 1910