Feb. 14, 1939. W. A. ROSENBERGER 2,146,917

VALVE FOR ABRADING APPARATUS

Filed May 14, 1936 3 Sheets-Sheet 1

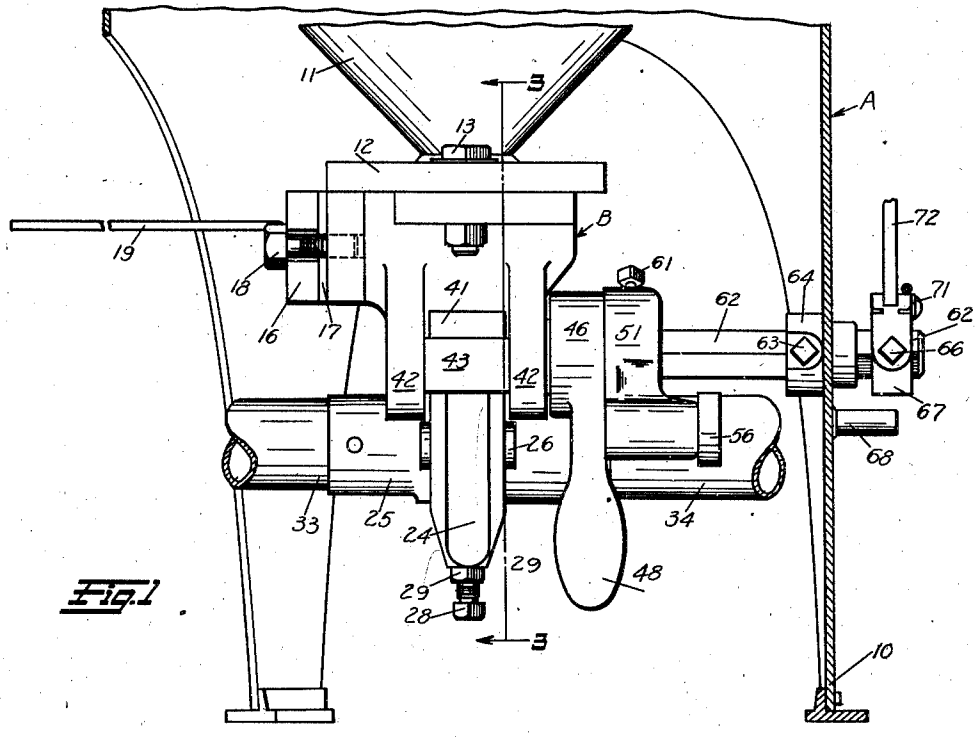

Fig. 1

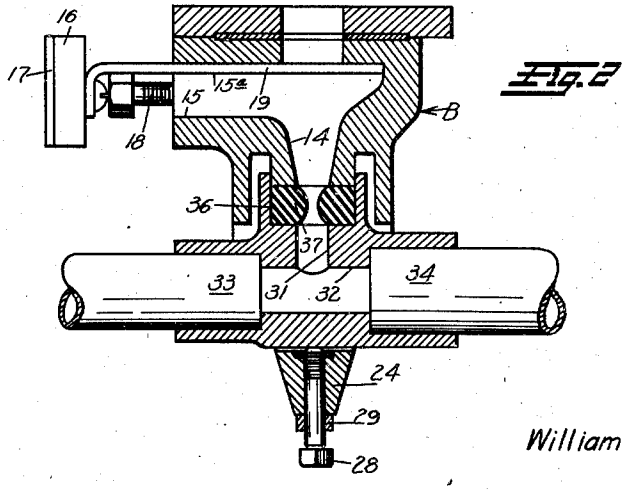

Fig. 2

Inventor

William A. Rosenberger

By Strauch & Hoffman

Attorneys

Feb. 14, 1939. W. A. ROSENBERGER 2,146,917

VALVE FOR ABRADING APPARATUS

Filed May 14, 1936 3 Sheets-Sheet 2

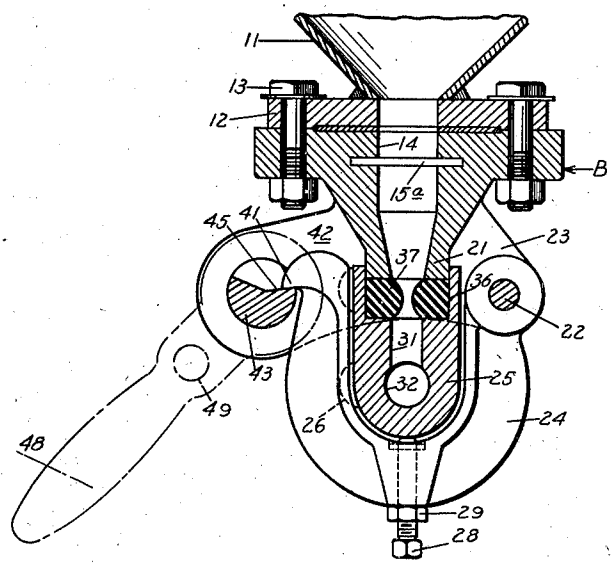

Fig. 3

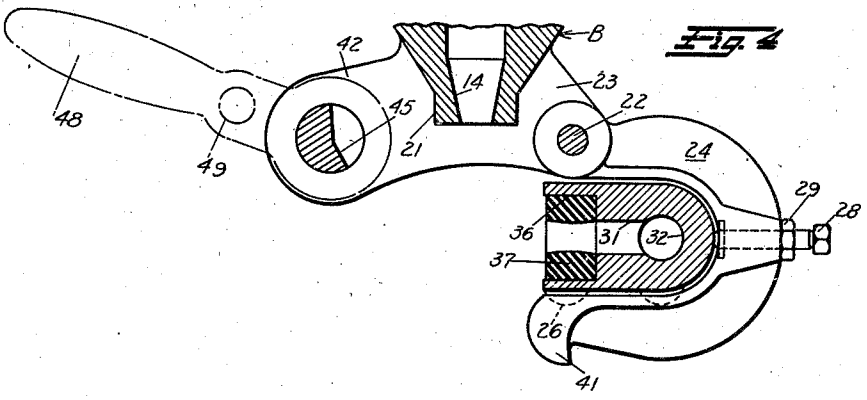

Fig. 4

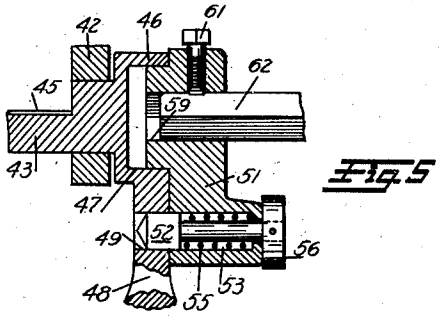

Fig. 5

Inventor
William A. Rosenberger

By Strauch & Hoffman

Attorneys

Feb. 14, 1939. W. A. ROSENBERGER 2,146,917

VALVE FOR ABRADING APPARATUS

Filed May 14, 1936 3 Sheets-Sheet 3

Fig. 6

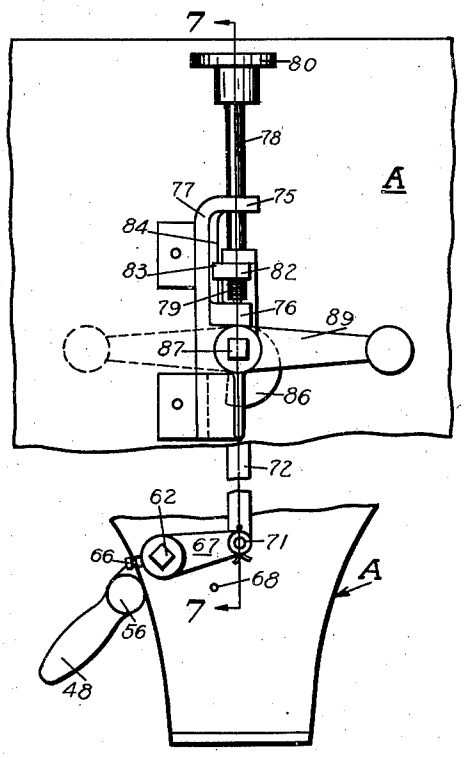

Fig. 7

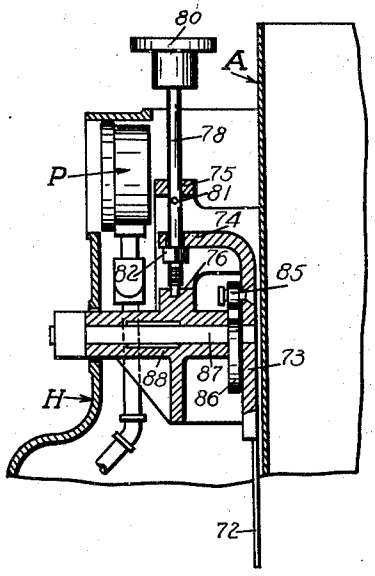

Inventor

William A. Rosenberger

By Strauch & Hoffman

Attorneys

Patented Feb. 14, 1939 2,146,917

UNITED STATES PATENT OFFICE

2,146,917

VALVE FOR ABRADING APPARATUS

William A. Rosenberger, Hagerstown, Md., assignor to Pangborn Corporation, Hagerstown, Md., a corporation of Maryland

Application May 14, 1936, Serial No. 79,767

16 Claims. (Cl. 251—5)

The present invention relates to abrading apparatus and is more particularly concerned with that type of abrading apparatus which is known in the art as a pressure blast tank machine.

In my Patent No. 2,025,247, granted December 24th, 1935, I have shown a pressure blast machine embodying a flow control mechanism which has proven highly successful in practice and which makes it possible to accurately meter the amount of sand or other abrasive that will be mixed with the air blast and yet which does not involve any slidable valve parts. In that patent there is disclosed an abrasive valve comprising a deformable element and means are employed for placing the deformable element under any desired degree of compression, to thereby provide any desired size of abrasive opening.

It is the purpose of the present invention to improve the construction shown in my patent and to provide the deformable valve with further novel control mechanisms which have been found to be highly desirable in practice.

It is a primary object of the present invention to provide, for use in abrasive feed valves of the character embodying a deformable member, a control mechanism for placing the deformable member under any desired degree of compression and which is so designed that it may be dropped completely away from the valve for the purpose of removing abrasive "clogs" without disturbing the predetermined setting of the pressure applied to the valve member.

It is a further object to provide abrading apparatus of the character embodying a pressure deformable abrasive valve member with a mechanism for placing the valve member under any desired degree of compression and a further means for applying sufficient pressure to completely close the valve member, the two mechanisms being so related that when the valve is closed and again opened, it will be subjected to the predetermined pressure setting.

Another object is to provide an abrading apparatus having a deformable abrasive control valve member and means adapted to be set for placing the valve member under a predetermined degree of compression and also having means for completely closing and means for completely opening the valve without disturbing the predetermined setting thereof.

Further objects of the invention will appear as the specification proceeds in connection with the annexed drawings, and from the appended claims.

In the drawings:

Figure 1 is a front elevational view of the control valve and mixing chamber assembly of the invention and illustrates a part of the blast tank in section.

Figure 2 is a longitudinal sectional view of the valve and mixing chamber assembly shown in Figure 1 and illustrates the auxiliary abrasive valve or check plate in operative position.

Figure 3 is a transverse sectional view taken substantially on the line 3—3 of Figure 1, but illustrates the parts as they appear when the check plate is in inoperative position.

Figure 4 is a view similar to Figure 3, but illustrates the mixing chamber dropped away from the hopper assembly.

Figure 5 is a longitudinal fragmental sectional view of the operating handle and plunger assembly shown in Figure 1.

Figure 6 is a side elevational view of the control mechanism and also illustrates the valve closing and valve adjusting mechanism mounted on the upper part of the abrasive tank.

Figure 7 is a sectional view taken substantially on the line 7—7 of Figure 6, looking in the direction of the arrows.

With continued reference to the drawings, wherein like reference characters have been employed to designate like parts throughout the several views thereof, and with particular reference to Figure 1, I have illustrated my invention as applied to a pressure blast tank A having legs 10.

Secured to the bottom portion of tank A in any suitable manner (not shown) is a hopper 11, which defines the bottom of the tank. Rigidly secured to hopper 11 by means of a weld or the like is a heavy flange 12, which supports the valve and mixing chamber and the control apparatus.

Secured to flange 12, by means of nut and bolt assemblies 13, is a body member B, and a suitable gasket is interposed between the parts to prevent air and abrasive leakage. Body member B is provided with a vertical passage 14 which communicates with the interior of the hopper and which is intersected by a transverse passage 15, which is open at one end to the atmosphere. Communicating with the upper side of passage 15 is a slot-like passage 15a.

Passage 15 is adapted to be closed by a valve plate 16 having a gasket 17 and which is secured to body B by means of a pair of stud and nut assemblies 18. Secured to the outer side of valve plate 16 is a check plate 19. As seen in Figure 2, nuts 18 may be loosened and the valve plate reversed and check plate 19 inserted in groove 15a to close off the abrasive flow.

This operation is performed prior to dropping the mixing chamber away from the apparatus, as will be presently described.

Body member B terminates in a cylindrical conduit 21 which defines an annular, downwardly facing clamping surface. The clamping surface of conduit 21 cooperates with a deformable valve that will now be described.

Secured to a pin 22 pivoted in a pair of ears 23 formed on body member B, is a yoke member 24. Yoke member 24 is of U-shape as seen in Figure 3 and forms a cradle for a mixing chamber member 25, which is provided with a plurality of lugs 26 for restraining the mixing chamber against endwise displacement in its yoke. Mixing chamber 25 is mounted for vertical adjustment in yoke 24 by means of a screw 28 threaded into the yoke and which is adapted to be locked in place therein by means of a locknut 29.

The mixing chamber is provided with a vertical passage 31 and an intersecting horizontal passage 32. An air supply conduit 33 is fitted in one end of the mixing chamber in communication with passage 32, and an abrasive blast conduit 34 is secured in the other end of the mixing chamber.

The upper end of the mixing chamber is provided with an upwardly facing cylindrical socket 36 in which a deformable apertured valve element 37 is disposed. The valve element or member may be made of any suitable flexible material but I have found that a good grade of rubber is entirely satisfactory. If desired, the valve may be mounted in a socket in portion 21 of the body member. When the valve is uncompressed it assumes the shape shown in Figure 4, whereas when it is partially compressed it assumes the shape shown in Figure 3, wherein the cross-sectional area has been considerably reduced. When placed under a sufficiently high pressure the valve will completely close and shut off the abrasive.

Although I have shown the mixing chamber as being separate from the yoke, in order to make it easy to obtain ready access to the mixing chamber and for permitting rapid replacement thereof, it is to be understood that these parts may be integrally formed if desired. The mechanism I preferably employ for placing the valve member under compression will now be described.

Yoke 24 is provided with a projecting nose or cam part 41. A pair of ears 42 formed on body B rotatably support a shaft member 43 which is cut away at its upper side to define a cam face 45, which cooperates with nose 41 of yoke 24 as seen in Figure 3. In Figure 3, rocking shaft 43 counter-clockwise will rock yoke 24 in a clockwise direction and further compress valve member 37, whereas rocking shaft 43 in the opposite direction will relieve the pressure in the valve member. Although yoke 24 and shaft 43 have been illustrated as journalled upon the body member, they may be supported upon any other part of the apparatus if desired.

Shaft 43 is provided with an enlarged portion 46 having an internal cylindrical surface 47. Preferably integrally formed with shaft 43 is a handle member 48 having a bore 49. Journalled in portion 46 of shaft 43 is a clutch member 51 having a slidably mounted plunger 52 disposed in a bore 53 therein and which is operable to enter bore 49 in handle 48 to lock the two parts together. A compression spring 55 urges plunger 52 towards locking position and the plunger is provided with a handle 56 for manually pulling the plunger out of bore 49, freeing the parts 46 and 51. Secured in a square bore 59 in member 51 by means of a set screw 61 is a square shaft 62.

It is accordingly seen that valve member 37 may be compressed by rocking handle 48 in a counter-clockwise direction (see Figure 3) independently of shaft 62, and that the shaft 62 may be locked to the handle by means of plunger 52. Secured to shaft 62 by means of a set screw 63 is a cylindrical bearing member 64 which is journalled in an opening in a leg of tank A. Secured to the outer end of shaft 62, by means of set screw 66, is a short lever 67 which cooperates with a stop 68 secured to tank A in a manner to be hereinafter pointed out.

Pivotally secured to lever 67 by means of a pin 71 is a link member 72. The upper end of link member 72 is secured to an operating member 73 having a horizontal portion 74. Rotatably mounted in bearings 75 and 76, carried in a casting 77 secured to tank A, is a regulator shaft 78. Shaft 78 is freely journalled in bearings 75 and 76 and extends through member 74 and is provided with a threaded lower end 79 and a hand wheel 80 at its upper end. A cotter pin 81 or the like extends through shaft 78 and bears against the lower side of bearing 75 for restraining shaft 78 against inadvertent removal from its bearings. A nut 82 is threaded on shaft 78 and is provided with a bifurcated portion 83 which straddles a vertically extending flange 84 provided on casting 77, so as to restrain nut 82 against rotation. It is accordingly apparent that rotating wheel 80 in one direction will thread nut 82 upwardly on shaft 78 and thereby lift member 74 and link 72; and rock lever 67 and shaft 62 anti-clockwise (Figure 6). Rocking shaft 62 in this manner, with the parts disposed in the position shown in Figure 5, results in rocking shaft 43 counter-clockwise (Figure 3) thereby rocking yoke 24 clockwise and comprising valve member 37. Rotating hand wheel 80 in the opposite direction allows link 72 to move downwardly and relieve the compression in the valve member.

I have also provided means for fully closing the valve and yet which is so designed that when it is operated to again open the valve, it will restore the original setting of the valve, i. e., the original degree of compression in member 37. Journalled on a pin secured to member 73 is a cam roller 85. Roller 85 cooperates with a cam 86 which is carried by shaft 87 mounted in bearings 88. Secured to shaft 87 is a handle 89 and in the position shown in Figure 6, the valve is in open position.

When the handle is rocked counter-clockwise into the dotted line position, cam 86 cooperates with roller 85 and lifts member 73 to fully close the valve. As seen in Figure 7, the parts are so dimensioned that a clearance is provided between roller 85 and cam 86 in the "open" position of the parts, so that hand wheel 80 may be operated to raise or lower member 73 to regulate the opening of the valve without interference from cam 86. It is also apparent that when the handle is operated to close the valve, member 74 merely slides upwardly on shaft 78, and that when handle 89 is returned to its full position (Figure 6) member 74 will slide downwardly around shaft 78 and again come to rest against the upper side of the nut 82 and thereby restore the original setting of the device.

The parts just described are preferably enclosed in a housing H and a pressure gauge P is also incorporated in the assembly for indicating the pressure conditions in the apparatus, but as these adjuncts form no part of the present invention they have not been further described.

It is therefore seen that I have devised an abrasive flow control mechanism wherein hand wheel 80 may be operated to accurately regulate the flow of abrasive by placing member 37 under a predetermined degree of compression, and the other controls may be operated to completely shut off the flow or to completely open the mixing chamber, and yet when the auxiliary controls are restored to their normal conditions the valve will return to the setting previously established by hand wheel 80 as the parts will come to rest with member 74 abutting the upper side of nut 82.

When a clog occurs in the mixing chamber, or if for any other reason it is desired to have access to the interior of the mixing chamber, check plate 19 is placed in the position shown in Figure 2 to cut off abrasive flow, handle 48 (Figure 1) is pushed downwardly a slight distance to relieve the pressure on plunger 52 and handle 56 is then pulled to the right to cause plunger 52 to disconnect shaft 43 from shaft 62. Handle 48 is then moved into the position indicated in Figure 4, which causes cam face 45 to release yoke 24, and the latter swings down by gravity and may then be moved into the position shown in that figure in order to get at passage 14 or to remove and replace valve member 37.

When yoke 24 is swung upwardly and locked in position by swinging handle 48 into the position shown in Figure 3 and plunger 52 is snapped into bore 49 to lock shafts 43 and 62 together, it is apparent that valve member 37 will be placed under the same degree of compression as existed before the mixing chamber was dropped in the manner just described because shaft 43, which controls the degree of compression has been restored to its original angular position.

Member 51, together with plunger 52, accordingly, constitutes a positive clutch for selectively coupling shafts 43 and 62, and although I prefer to employ the clutch shown, it is to be understood that other forms of clutches may be used without departing from the spirit of the invention.

When the machine is initially started, handle 89 (Figure 6) is disposed in its dotted line or "closed" position to shut off the abrasive flow. When pressure has been built up in the tank, handle 89 is moved into its full line position so as to open the valve and allow the abrasive to gravitate into the mixing chamber.

Hand wheel 80 may be operated as desired to either increase or decrease the rate of abrasive flow. The parts are preferably so dimensioned that when hand wheel 80 has been rotated sufficiently to engage lever 67 with stop pin 68, cam face 45 will still retain yoke 24 in its raised position, thereby preventing inadvertent dropping of the mixing chamber. If it is desired to adjust the mixing chamber with respect to yoke 24, for instance, to compensate for valves of different thicknesses or to calibrate the machine, screw 28 may be turned to either raise or lower the mixing chamber.

When the mixing chamber becomes clogged or becomes sufficiently worn to require replacement it may readily be removed by rocking yoke 24 slightly upwardly from the position shown in Figure 4 and slid out of the yoke.

The invention may be embodied in other specific forms without departing from the spirit or essential characteristics thereof. The present embodiment is therefore to be considered in all respects as illustrative and not restrictive, the scope of the invention being indicated by the appended claims rather than by the foregoing description, and all changes which come within the meaning and range of equivalency of the claims are therefore intended to be embraced therein.

What is claimed and desired to be secured by United States Letters Patent is:

1. In an abrading apparatus, a valve, a valve controlling member movable from a valve opening position to a valve closing position, a regulating device, a train of elements interconnecting said valve controlling member and said regulating device, whereby the latter may selectively hold said valve controlling member in a plurality of different set positions intermediate said valve opening and valve closing positions, said train of elements including a selectively operable clutch for disconnecting said valve controlling member from said regulating device, said valve controlling member having a part which may be manually operated to bring it into valve opening position, said clutch being operable to connect said elements in only one angular relationship, whereby when it is operated to connect said elements it will maintain said valve controlling member in a predetermined position with respect to said regulating device.

2. The apparatus described in claim 1, wherein said train of elements includes means operable in one direction to move said valve controlling member into valve closing position and operable in the opposite direction to restore said valve controlling member to the position in which it was maintained by said regulating device.

3. For use with an abrading apparatus having a body member providing a passage terminating in a downwardly facing clamping face and a hollow mixing chamber having a clamping face and mounted for rocking movement toward and away from the clamping face of said body member, an apertured deformable valve element being disposed between said clamping faces and adapted to be placed under various degrees of compression, means for holding said mixing chamber in operative position and for rocking it toward and away from said body member, comprising a cam member journalled for rocking movement adjacent said body member and cooperating with a cam projection provided on said mixing chamber.

4. The apparatus described in claim 3, wherein said mixing chamber and said cam member are rockable about substantially parallel axes located on opposite sides of said body member.

5. The apparatus described in claim 3, together with a shaft member mounted for rocking movement adjacent said cam member and having means for selectively holding it in various angular positions, and releasable coupling means for connecting said shaft member to said cam member.

6. The apparatus described in claim 3, wherein means are provided for adjusting said mixing chamber with respect to its pivotal axis.

7. In combination with a body member having a passage therein and a valve associated therewith for metering the quantity of a fluid or other substance flowing through said passage, a valve controlling element, a cam member mounted for rocking movement adjacent said body member and operable to move said element from a valve-opening to a valve-closing position, a shaft mem-

ber journalled adjacent said cam member and having a clutch for connecting it thereto, said clutch being operable to positively couple said cam member and said shaft in but one angular relationship, said cam member, when said clutch is released, being operable to move said element into valve opening position, and regulator means for selectively holding said shaft in various angular positions, to thereby place said valve controlling element in various positions when said clutch is engaged.

8. The apparatus described in claim 7, wherein said cam member is provided with means for operating it independently of said shaft member when said clutch is released.

9. The apparatus described in claim 7, together with means for limiting movement of said shaft member toward valve opening position.

10. The apparatus described in claim 7, wherein said regulator means embodies means for allowing said shaft member to be moved toward valve closing position independently of the normal regulating action of said regulator means, together with shut off means for moving said shaft toward valve closing position.

11. In an abrading apparatus, a hollow body member providing a downwardly extending spout portion, a yoke mounted for rocking movement adjacent said body member, a mixing chamber operatively disposed in said yoke and having a valve part mounted for cooperation with said spout portion of said body member to control the fluent flow when said yoke is rocked about its axis, means mounting said mixing chamber in said yoke for adjustment toward and away from said spout portion, and means for moving said yoke about its axis and selectively maintaining it in a plurality of adjusted positions, to thereby control the fluent flow through said body member.

12. For use with an abrading apparatus, having a body member providing a downwardly extending abrasive conduit defining a downwardly facing clamping surface and a mixing chamber mounted for rocking movement through an arc of considerable amplitude about a substantially horizontal axis adjacent said body member, said mixing chamber having an upwardly facing clamping surface and an apertured deformable valve being disposed between said clamping surfaces, an operating member mounted for rocking movement adjacent said body member, and means for interconnecting said mixing chamber and said operating member for causing said mixing chamber to deform said valve member when said operating member is rocked through a comparatively small angle in one direction, and for freeing said mixing chamber and allowing it to drop down about its axis when said operating member is rocked through a comparatively large angle in the opposite direction.

13. The apparatus described in claim 12, wherein said operating member is mounted for rocking movement about a substantially horizontal axis and is provided with a part which is disposed in the path of movement of said mixing chamber when said operating member is disposed in one angular position.

14. The apparatus described in claim 12, wherein said mixing chamber is provided with a cam portion and said operating member defines a cam which is operable to cooperate with said cam portion in one range of movement to rock said mixing chamber between valve opening and valve closing positions, and operable in another range of movement to bring itself out of the path of movement of said cam portion and allow said mixing chamber to drop away from said body member.

15. In an abrading apparatus, a valve actuating element, a valve controlling member cooperating with said valve actuating element and mounted for movement from a valve opening to a valve closing position, coupling means for connecting said valve controlling member to said valve actuating element, adjusting means for moving said member into, and maintaining the same in any one of a plurality of set valve positions intermediate said valve opening and said valve closing positions, said adjusting means having a one-way connection with said member for permitting the latter to be moved toward valve closing position independently of the action of said adjusting means, and cut-off means, acting independently of said adjusting means, for moving said member into valve closing position, said coupling means being releasable to allow said valve actuating element to move into valve opening position independently of said valve controlling member and said cut-off means.

16. The apparatus described in claim 15, wherein said valve controlling member is provided with an abutment face and said adjusting means comprises a threaded element engageable with said abutment face and operable to hold said member against movement toward valve opening direction in any desired position intermediate valve opening and valve closing positions, and wherein said cut-off means comprises a lever rockable into engagement with said valve controlling member and operable to move the latter away from said threaded element.

WM. A. ROSENBERGER.

CERTIFICATE OF CORRECTION.

Patent No. 2,146,917. February 14, 1939.

WILLIAM A. ROSENBERGER.

It is hereby certified that error appears in the printed specification of the above numbered patent requiring correction as follows: Page 4, first column, line 48, claim 12, after the word "valve" insert member; and that the said Letters Patent should be read with this correction therein that the same may conform to the record of the case in the Patent Office.

Signed and sealed this 28th day of March, A. D. 1939.

Henry Van Arsdale

(Seal) Acting Commissioner of Patents.