United States Patent [19]

Kraus, Sr.

[11] **Patent Number: 4,532,568**

[45] **Date of Patent: Jul. 30, 1985**

[54] **THREE-PHASE LEAKAGE PROTECTION BY ELECTRONIC CONTROL**

[76] Inventor: **Arthur A. Kraus, Sr.**, 471 Scott St., Joliet, Ill. 60432

[21] Appl. No.: **462,083**

[22] Filed: **Jan. 28, 1983**

[51] **Int. Cl.**[3] **H02H 3/16**

[52] **U.S. Cl.** **361/42**; 361/47; 361/50; 340/650

[58] **Field of Search** 361/42, 47, 48, 49, 361/50; 200/44; 324/51; 340/650, 651, 649

[56] **References Cited**

U.S. PATENT DOCUMENTS

3,286,129	11/1966	Gagniere	361/47
3,440,491	4/1969	Tenenbaum et al.	361/94 X
3,515,942	6/1970	Gordon	361/49
3,665,252	5/1972	Rogers, Sr. et al.	361/50
3,705,507	12/1972	Sanders et al.	200/44
3,742,161	6/1973	Lipschutz	200/44
4,099,215	7/1978	Parrier et al.	361/42

Primary Examiner—Patrick R. Salce

Attorney, Agent, or Firm—Neuman, Williams, Anderson & Olson

[57] **ABSTRACT**

A system is provided for early detection of leakage currents through ground connections of loads such as three-phase motors connected to isolated secondary windings of supply transformers. An alarm device is energizable when leakage current is a small fraction of a predetermined value which might present a potential hazard, the point of energization being adjustable by an operator until the predetermined value is reached. Thereafter, it is adjustable only by a supervisor, after operation of a key switch. Circuitry is provided to obtain sensitive, stable and reliable operation.

2 Claims, 4 Drawing Figures

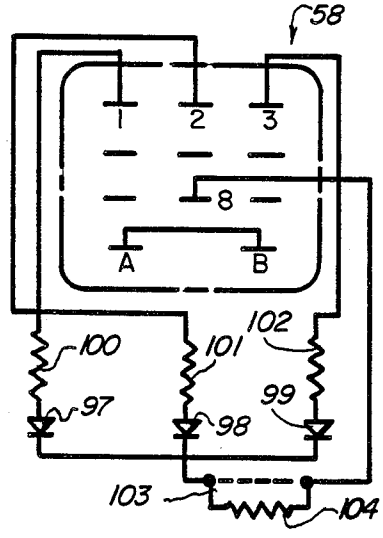

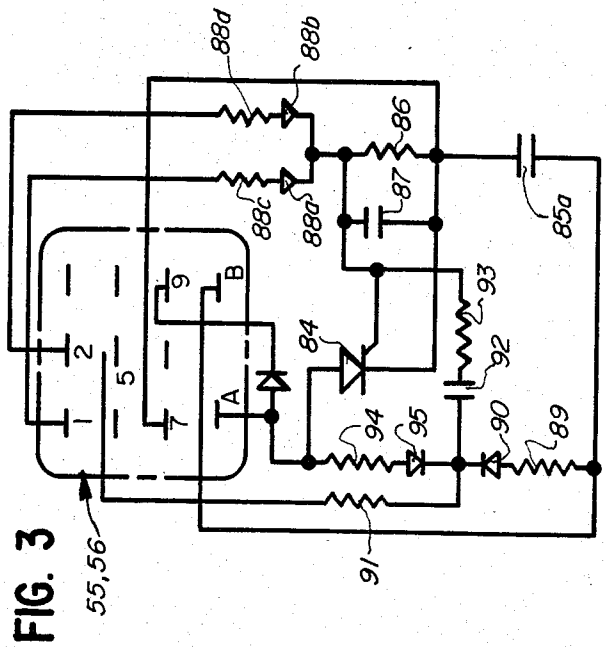

FIG. 3

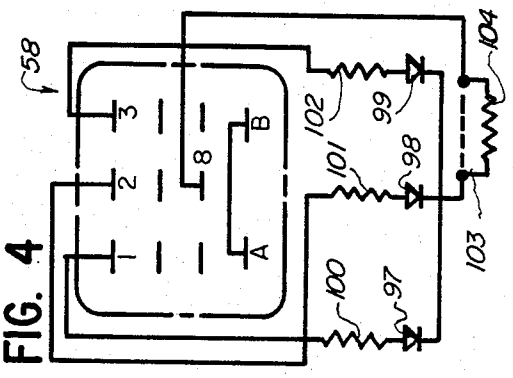

FIG. 4

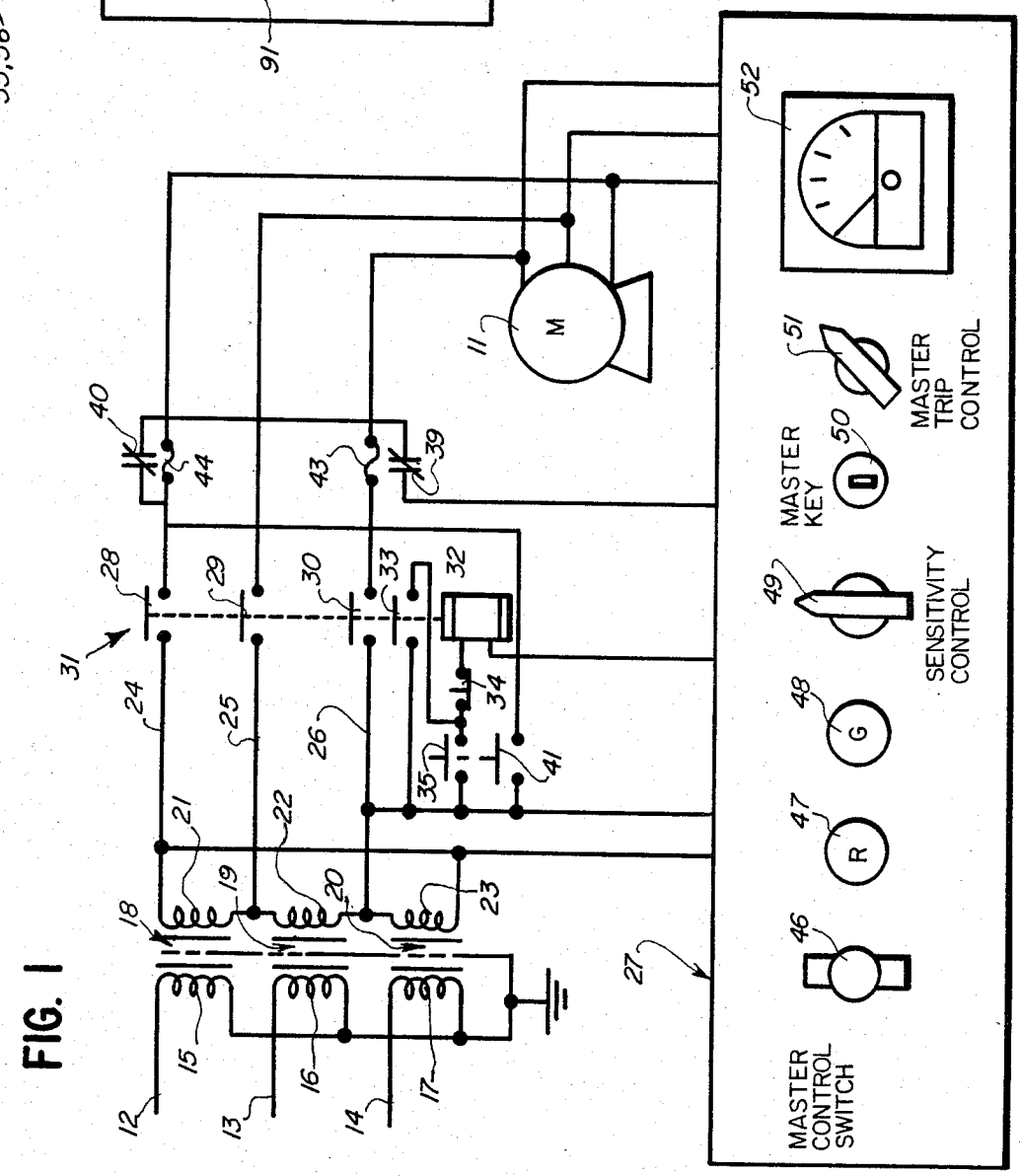

FIG. 1

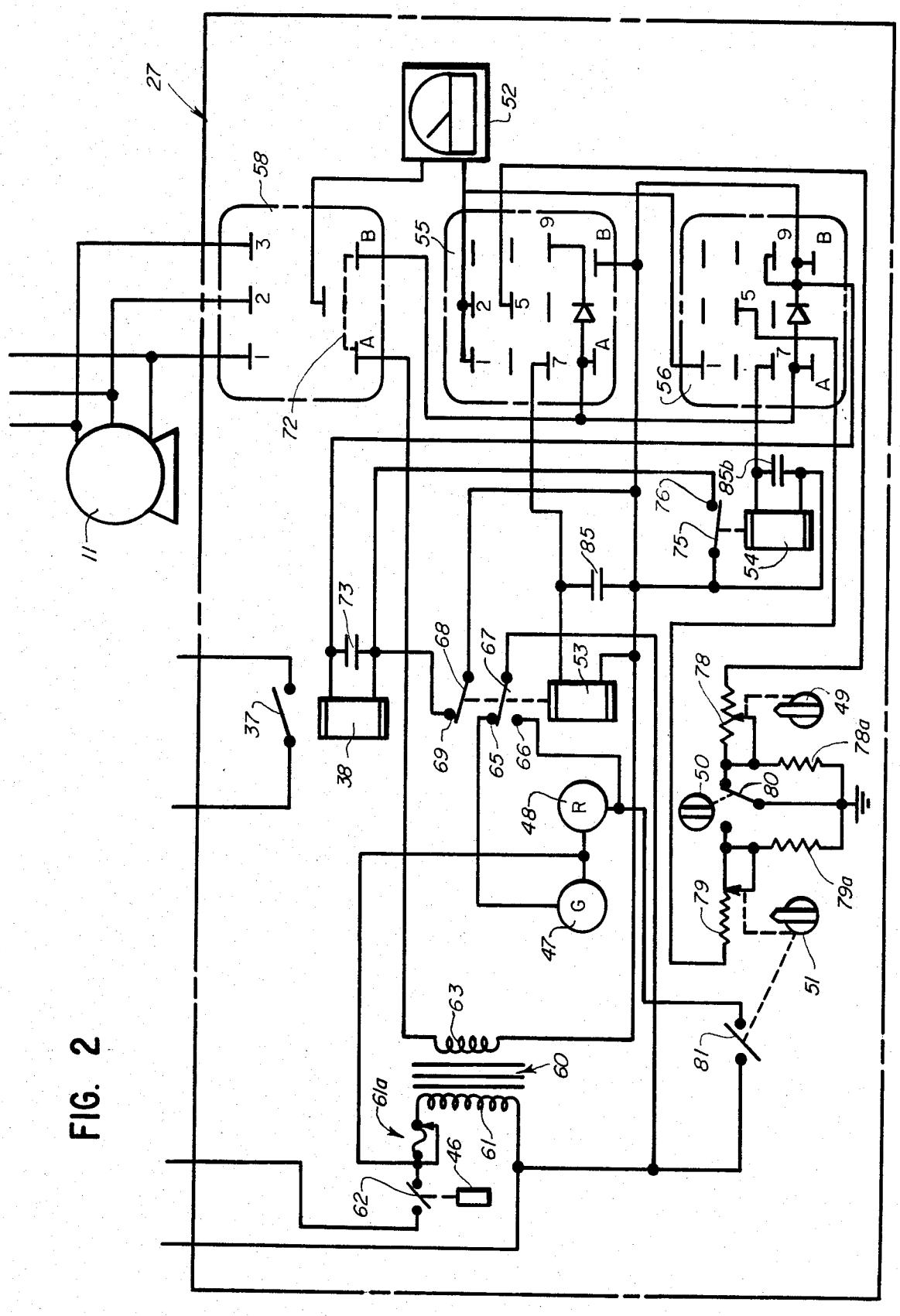
27
52
58
55
56
72
11
73
68
67
53
85
85b
76
75
54
37
38
69
65
66
48
R
G
47
78
49
78a
50
80
79
79a
51
81
63
60
61a
61
46
62

FIG. 2

THREE-PHASE LEAKAGE PROTECTION BY ELECTRONIC CONTROL

This invention relates to an electronic control arrangement and more particularly to an arrangement which is particularly advantageous in controlling the supply of three-phase electrical power to motors or other loads. The arrangement protects equipment against damage and also protects operating personnel against dangerous conditions which might produce shocks. It is highly effective and reliable while being easy to install and use and readily and economically manufacturable. An important advantage of the arrangement is that leakage conditions can be detected and indicated at an early stage of development to permit remedial actions to be taken before serious damage can occur.

BACKGROUND OF THE INVENTION

It is known that single phase electrical supplies such as used in various residential, commercial and industrial applications can be designed to avoid shock hazards by departing from conventional practice and using a system which is isolated from ground. It is also known to provide circuitry for detecting leakage current between such an isolated system and ground. However, the systems which have been designed for single phase operation have not been suitable for operation in three-phase supply systems such as used in industrial applications. Moreover, the advantages of protection of three-phase systems and problems involved therewith have not been fully recognized and dealt with in the prior art.

SUMMARY OF THE INVENTION

This invention is based in part upon the recognition of important advantages obtainable from isolating three-phase supply systems from ground and was evolved with the general object of providing an arrangement for protection of three-phase electrical supply systems with respect to preventing damage and dangerous conditions which might result from leakage currents.

Another object of the invention is to provide an arrangement which is highly effective and reliable while being readily installed.

An important aspect of the invention is in the recognition that one of the problems involved with three-phase power supply systems is that the equipment generally uses a Y-type wiring with a common line which is well grounded producing an increased likelihood of breakdowns due to leakage as well as an increased danger with respect to shocks.

It is found that any small leakage developed in any phase of a system as, for example, in the winding of a motor, tends to become greater as time progresses, eventually producing a condition in which there may be a complete breakdown of insulation. The resistance of many types of insulators is a function of the moisture content, the resistance being decreased as the moisture content is increased. When even a small leakage current develops, it tends to cause heating to some extent and so long as the current is of relatively small magnitude, there is little problem. However, as the moisture content increases, the current also increases and the combined effects may reach a magnitude such as to change the chemical composition of the insulation and further reduce its resistance. Then as the resistance is reduced, the current is increased, accelerating the deterioration of the insulation until a point is reached at which the insulation may burn, in effect, changing from a composition which has a high resistivity to a carbon composition which has a quite low resistivity. At this point, the insulation may break down completely, producing very high short-circuit currents and possibly causing a fire as well as producing a condition which is very hazardous to personnel in the vicinity.

With a grounded neutral or common line as used with a Y-type wiring, it is desirable that the frames of all motors and other equipment be well grounded to minimize shock hazards. However, the likelihood of a breakdown is increased. If, for example, a leakage should develop between a portion of a motor winding and the grounded frame of the motor, a low resistance return path is provided through the frame which would not be provided if both the neutral and frame were not grounded. Another very important consideration is that the detection of a developing leakage condition is practically impossible when both the neutral and frame are well grounded.

In accordance with the invention, a control arrangement is provided for use in isolated three-phase systems supplying current to motors or other loads, the systems being isolated from ground as by using a delta-type connection with three supply lines between the load and the connections of three transformer secondary windings.

The control arrangement includes means for monitoring the magnitude of leakage currents between the supply lines and through a suitable ground connection which may be made to the frame of a motor, for example. By monitoring the magnitude of leakage currents, it is possible to detect the development of conditions which could lead to serious problems if no action were taken. Such detection may be accomplished at an early stage such as to allow appropriate remedial action to be taken.

The early detection of potential leakage problems is very important. An example is the case of a motor driving a municipal deep water well pump. When it is found that a leakage is developing in such a motor, steps may be taken to shut-down the motor and withdraw it from the well for inspection and servicing, or replacement, at a selected convenient time when it will have minimal effect with respect to disruption of services. If on the other hand, the potential problems were not detected, the leakage could lead to burn-out of the motor at a time when a serious disruption of service would occur and when it might take a long period of time to replace the motor. Moreover, conditions could develop which would create dangerous shock hazards.

Important features relate to the indication of leakage conditions in ways such as to create a high degree of probability that the leakage conditions will not be ignored and that corrective action will be taken. At the same time, the arrangement is such as to allow for variations in operating conditions and to insure against producing false alarms which might prevent proper attention to developing leakage conditions.

One feature relates to the energization of a signal lamp or other signal device when a leakage current is developed which has a value equal to a predetermined minor fraction of a predetermined leakage current value which is the lowest value which might indicate the need for possible remedial action. When the signal device is energized, the operator, i.e., the person charged with the daily duty of monitoring operation, may adjust a

sensitivity control to obtain less sensitivity and to deenergize the signal device, provided that the leakage current is less than the predetermined value.

After so adjusting sensitivity, it may usually be the case that the signal device will remain deenergized indefinitely and even though the sensitivity has been decreased, it is safe to continue operation, the leakage current value being still less than the predetermined value which might indicate the need for possible remedial action. However, if the signal device is again energized and if it becomes necessary to make continued adjustments to obtain less and less sensitivity, the operator is alerted to the fact that a condition is developing which may require attention and he may well decide to take remedial action. If a stage is reached at which deenergization of the signal device is no longer possible through adjustment of sensitivity, the operator then knows that something must be done.

Another feature relates to the provision of means for overriding the control by the operator to insure a shut-down of the equipment when the leakage current reaches a second predetermined value which is higher than the first and which requires a shut-down.

A further feature relates to provisions for supervisory control to permit a supervisor to temporarily continue operation when appropriate, even though the leakage current has reached a potentially unsafe value. In the case of a municipal deep well water pump, for example, it may be desirable to continue operation until a replacement motor is available and ready for installation in the middle of the night when a service disruption will have minimal effect. To permit operation in such circumstances, controls are provided which are operable only by a supervisor who has a key. However, safeguards are still provided for preventing continued operation under conditions which are dangerous with respect to destruction of equipment or the safety of personnal.

Additional features of the invention relate to the circuitry used for monitoring leakage currents in a manner such as to obtain results which are highly accurate and also highly reliable with minimal sensitivity to transient field conditions and noise signals which might produce false indications and cause unnecessary and expensive shut-downs of equipment.

At least one and preferably two monitor units are provided for detecting the flow of leakage current and for controlling energization of indicating means from a power supply. Each monitor unit includes an amplifier which is preferably formed by a silicon-controlled rectifier connected in series with the indicating means and the power supply. The power supply preferably includes a step-down transformer energized from the secondary of an isolation transformer. The indicating means preferably includes a relay which may have contacts connected to control interruption of power to a load when a certain leakage current is detected. The indicating means may also include a signal light or other signal device for indicating when the leakage current reaches a predetermined lesser leakage current, for use in signalling a developing leakage current situation.

The input of the amplifier of each monitor unit is connected to a terminal which is connected through first coupling means to a plurality of the load circuit wires and is also connected through second coupling means to ground. The first coupling means preferably includes a plurality of diodes (three diodes in a three-phase system) and the second coupling means preferably comprises resistance means for controlling the current applied to the amplifier in response to grounding of one of the load circuit wires. The resistance means of the second coupling means is preferably adjustable to adjust the sensitivity of the system and may also comprise a fixed resistance means for limiting the current applied to the amplifier in response to direct grounding of one of the load circuit wires.

Stabilizing means are associated with the coupling means and are operative to inhibit energization of the indicating means in response to conditions other than the existence of a fault resistance below a certain value. The stabilizing means preferably includes means for applying a biasing signal between the input terminals of the amplifier and in a direction opposite the direction of the fault signal so that a fault signal of a certain amplitude must be applied before the indicating means will be energized. This arrangement also operates to inhibit energization of the indicating means in response to transient field conditions which might affect components of the circuitry. In a preferred embodiment, the stabilizing means further includes resistance and capacitance means operative to require a fault condition applied for a certain interval of time in order to cause energization of the indicating means.

Additional features of the invention relate to the provision of a comparatively simple and yet highly effective and reliable circuit arrangement incorporation such stabilizing means and operative for controlling energization of the indicating means.

This invention contemplates other objects, features and advantages which will become more fully apparent from the following detailed description taken in conjunction with the accompanying drawings.

BRIEF DESCRIPTION OF THE DRAWINGS

FIG. **1** is a schematic diagram of an electrical power distribution system with a leakage current sensing unit connected thereto, in accordance with the invention;

FIG. **2** is a schematic diagram of the leakage current sensing unit which is shown in block form in FIG. **1**;

FIG. **3** is a schematic diagram of one of two circuit modules which are shown in block form in FIG. **2**; and

FIG. **4** is a schematic diagram of a connector or power divider module shown in block form in FIG. **1**.

DESCRIPTION OF A PREFERRED EMBODIMENT

Reference numeral **10** generally designates a system for supplying three-phase electrical power to a motor **11**. In the system **10** as illustrated, three-phase electrical supply lines **12**, **13** and **14** are connected to primary windings **15**, **16** and **17** of transformers **18**, **19** and **20**, the primary windings being connected in a Y configuration in the circuit as illustrated. The transformers **18**, **19** and **20** have secondary windings **21**, **22** and **23** which are connected to the motor **11** through lines **24**, **25** and **26** and through a contactor circuit which is controllable by a leakage current sensing unit **27** of the invention. The secondary windings **21**, **22** and **23** are isolated from ground and are connected in a delta configuration to lines **24**, **25** and **26**. Shields may be provided between the primary and secondary windings, such shields being connected to ground, as diagrammatically illustrated.

In the illustrated contactor circuit, the lines **24**, **25** and **26** are connected to the motor **11** through contacts **28**, **29** and **30** of a contactor **31** which also includes an operating coil **32** and a holding or interlock contact **33**. The upper terminal of the operating coil **32** is connected

through a normally closed stop switch contact **34** and is connectable through a normally open start switch contact **35** to the line **26**, the holding contact **33** being connected in parallel with the start contact **35**. The lower terminal of the operating coil **32** is connected through a contact **37** of a relay **38** (shown in FIG. **2**) and through normally closed breaker contacts **39** and **40** to the line which is connected between contact **28** and the motor **11**, that line being also connected through a normally open start switch contact **41** and to the line **26**. As hereinafter described, the relay **38** with the unit **27** is energized to close the contact **37** prior to operation of the start switch contacts **35** and **41**.

In the operation of the contactor circuitry, closure of the contacts **35** and **41**, after energizing relay **38**, causes energization of the contactor coil **32** to close the contacts **28**, **29**, **30** and **33** and after closure of such contacts, energization of the coil **32** is maintained through the contacts **28** and **33**. The coil **32** may be deenergized by opening the stop contact **34** or may be automatically deenergized when either of the breaker contacts **39** or **40** is opened in response to excessive current through sensor elements **43** and **44**.

The coil **32** may also be deenergized through the operation of circuitry of the sensing and control unit **27** which is operative to sense leakage currents between any two of the isolated lines **24**, **25** and **26**, such as may be developed through leakages between such lines and ground. The unit **27** may be preset to automatically deenergize the relay **38** and thereby open the contact **37** and deenergize the coil **32** to cause deenergization of the motor. Such automatic operation is effected when the resistance between the lines and ground is reduced below a safe value, to thereby protect against shock hazards and also to protect the motor **11** or other equipment from unnecessary damage. The unit **27** is also advantageous in providing warnings of impending problems in a manner such as to insure that corrective actions will be taken before conditions develop which endanger the lives of operating personnel or which would cause expensive damage to motors or other equipment.

As shown diagrammatically in FIG. **1**, the leakage current sensing and control unit **27** includes a front panel with controls and indicators, including a master control switch **46**, a red signal light **47**, a green indicating light **48**, a sensitivity control **49**, a master key switch **50**, a master trip control **51** and a meter **52**. In the operation of the system, the master control switch **46** may be operated to an on position, to effect energization of the relay **38**. Then the start switch contacts **35** and **41** may be closed momentarily to cause energization of the motor **11** in the manner as above described.

If the leakage current is less than a predetermined value, the green light **48** will be energized but if, at any time, the leakage current should exceed a certain value, the red light **47** will become energized and the green light **48** will be deenergized.

The current required for energization of the red light is determined by the position of the sensitivity control **49** and in the normal operation of the system, the operator, i.e., the person who is assigned the duty of monitoring the operation of the meter **11**, will initially adjust the control **49** to obtain a certain indication on the meter **52**, which indicates the leakage current.

For example, the control **49** may be set to obtain an indication of **20** on the meter **52**, having a full scale reading of **100**. Then the red light **47** will be energized when the indication of the meter is on the order of **40** to **75**. The sensitivity control **49** may be adjusted from time to time in response to changes in conditions. For example, during damp weather, the meter indication will tend to rise and when it is observed that the meter indication is rising or when the red light **47** becomes energized, the control **49** may be adjusted to again obtain an indication of **20**.

However, if the leakage current should continue to rise, a condition will be reached in which adjustment of the sensitivity control **49** will no longer deenergize the red light **47**. At this time, it is the responsibility of the operator to call in a supervisor who has a key for operating the switch **50**. The supervisor may then operate the switch **50** and then adjust the master trip control **51** to permit continued operation of the motor **11**.

At this time, however, two persons, the operator and the supervisor, are responsible for operation of the motor **11** and are well aware of the fact that there is a potential serious problem and although the supervisor may decide to temporarily continue operation of the motor **11**, he or she is well advised to take immediate steps to ascertain the cause of the problem and effect a resolution.

It should be noted that if at any time, the leakage current should exceed certain higher values, the unit will operate automatically to deenergize the relay **38** and open the contact **37** to deenergize the motor **11**.

FIG. **2** is a circuit diagram of the unit **27**, it being noted that the relay **38** with its contact **37** is part of the control unit **27** as indicated by broken lines in FIG. **1**. In addition to the relay **38**, a pair of relays **53** and **54** are provided which are respectively operated by a pair of circuit modules **55** and **56**. Modules **55** and **56** are connected through the meter **52** to a power divider module **58** which is connected to the lines leading to the motor **11** in the arrangement as illustrated. Terminals to connectors to the circuit modules **55** and **56** and to the power divide module **58** are shown in FIG. **2** and the circuits of the modules are shown in FIGS. **3** and **4**.

Power to the circuitry is applied from a transformer **60** which has a primary winding **61** connected to the lines **24** and **26** through a thermo-switch **61***a* and a contact **62**. The contact **62** is operable by the master control switch **46**.

The transformer **60** has a secondary winding **63** which may supply a voltage at a relatively low level, for example **24** volts, for operation of the relays **38**, **53** and **54**. The signal lights **47** and **48** may, however, be operative at higher voltages and, as shown, terminals thereof may be connected to the lower terminal of the primary winding **61** while the opposite terminals thereof may be respectively connected to fixed contacts **65** and **66** of the relay **53**, engageable by a movable contact **67** thereof. When the relay **53** is deenergized, the contact **65** is engaged by the contact **67** to energize the green light **48** but when the relay **53** is energized, the contact **67** engages the contact **66** to energize the red light **47**. Contact **67** is connected to the upper terminal of the primary winding **61** which is connected to the line **26**.

To control energization of the relay **38** under certain conditions, the relay **53** has a second movable contact **68** which is connected to the lower terminal of the secondary winding **63** and which is engageable with a fixed contact **69** in the deenergized condition of the relay **53**, contact **69** being connected to the upper terminal of the relay **38**. The lower terminal of the relay **38** is connected to a No. **9** terminal of the module **56**, the No.

9 terminal being connected through a rectifier diode within the module **56** to an "A" terminal thereof. The "A" terminal is connected through a heat sensing turn-off device **72** in the power divider module **58** to the upper terminal of the transformer secondary winding **63**. Thus, with the relay **53** deenergized, rectified current is supplied to the relay **38**. As shown, a capacitor **73** may be connected in parallel with the relay **38** to smooth out the current.

The relay **54** has a movable contact **75** which is engaged with a fixed contact **76** in the deenergized condition of the relay, contact **75** being connected to the lower terminal of the winding **63** and contact **76** being connected to the upper terminal of the relay **38**. Thus, contacts **75** and **76** are connected in parallel with the contacts **68** and **69**. Energization of both relays **53** and **54** is required to cause deenergization of the relay **38** once the master control switch contact **62** is closed.

The operation of the relay **53** is controlled from the current sensing module **55**, the sensitivity of which is controlled by a potentiometer or adjustable resistor **78** which has a movable contact mechanically connected to the sensitivity control **49**. The operation of the relay **54** is controlled by the module **56**, the sensitivity of which is controlled by an adjustable potentiometer or resistor **79** which has a movable contact mechanically coupled to the master trip control knob **51**. When the key switch **50** is not operated, a contact **80** thereof connects the movable contact of potentiometer **78** to ground, shorting out a resistor **78***a* in series with potentiometer **78**. When the key switch **50** is operated, the contact **80** connects the movable contact of potentiometer **79** to ground, shorting out a resistor **79***a* in series with the potentiometer **79**. Resistors **78***a* and **79***a* function to insure a complete shut down when leakage current exceeds a certain first value, regardless of the position of the key switch **50** and regardless of whether or not an operator or a superviser is present. A contact **81** is mechanically coupled to the control knob **51** and is operated to a closed position when the master trip control **51** is moved away from its maximum sensitivity position.

FIG. **2** shows diagrammatically the arrangement of terminals of connectors which interconnect the modules **55** and **56** with the relay and power supply circuitry also illustrated in FIG. **2**. As shown, the connectors include terminals Nos. **1–9** and "A" and "B" terminals, only certain ones of the numbered terminals being used. FIG. **3** shows the connection of such connector terminals to the circuitry of the module **55** which may be substantially identical to that of the module **56**.

In the module **55**, the "A" terminal is connected to the anode of a silicon-controlled rectifier **84** which forms an amplifier device. The No. **7** terminal is connected to the cathode of the silicon-controlled rectifier **84** and with reference to the circuit of FIG. **2**, it will be noted that with such connections, the relay **53** will be energized when the silicon-controlled rectifier **84** conducts. A rectified half-wave current may be applied to the relay **53** when the silicon-controlled rectifier **84** continues to conduct during a number of cycles of the alternating current. Preferably, as shown in FIG. **2**, a capacitor **85** may be connected in parallel with the relay **53** to obtain a filtering action. A parallel capacitor **85***a* may be included in the module **55**.

The silicon-controlled rectifier **84** provides an amplifier, the output terminals of which are formed by the anode and cathode thereof and the input terminals of which are formed by the gate and cathode thereof, the cathode being both an input terminal and an output terminal. The gate of the rectifier **84** is connected to the cathode thereof through a resistor **86** and a parallel capacitor **87** and is also connected to the No. **1** and No. **2** terminals through diodes **88***a* and **88***b* and resistors **88***c* and **88***d*, the No. **1** and No. **2** terminals being connected to the meter **52** as shown in FIG. **2**. As hereinafter described, the meter **52** is coupled through the module **58** to the A.C. supply lines of the energizing circuit for the motor **11**.

The cathode of the rectifier **84** is coupled to ground through a path which includes the relay **53**, connected between the number **7** and "B" terminal (FIG. **2**), a resistor **89**, a diode **90**, a fixed resistor **91** and the potentiometer or adjustable resistor **78**. When a fault resistance is developed between ground and the supply line, current may flow in a direction such as to cause the potential of the gate of the rectifier **84** to move in a positive direction relative to the cathode thereof.

An important feature is in the provision of stabilizing means for inhibiting energization of one or the other of the relays **53** or **54** in response to conditions other than the existence of a fault resistance below a certain value. In the illustrated circuit, a capacitor **92** is connected in series with a resistor **93** between the cathode of the diode **90** and the gate of the rectifier **84** and a resistor **94** is connected in series with a diode **95** between the cathode of the diode **90** and the "A" terminal which is connected to the upper terminal of the secondary winding **63** (FIG. **2**). Capacitor **92** and resistor **93** operate to provide a bleed-off circuit to apply a biasing signal and to prevent the rectifiers **84** from being paralyzed in an "on" condition.

Resistor **94** and diode **95** cooperate with resistor **89** and diode **90** to establish a neutral point to the capacitor **92**. When the "A" terminal is positive relative to the "B" terminal, current may flow through the resistor **94**, diode **95**, capacitor **92**, resistor **93**, resistor **86** and relay **53** to the "B" terminal Through such current flow, the capacitor **92** may be charged to a voltage substantially equal to the peak of the voltage developed across the winding **63**, the left-hand terminal of the capacitor **92** being positive and the right-hand terminal being negative.

Since the left-hand terminal of the capacitor **92** is connected through resistors **91** and **78** to ground, the right-hand terminal thereof is placed at a negative potential relative to ground, and through the resistor **93**, a negative bias relative to ground is applied to the gate of the rectifier **84**. This bias signal inhibits firing of the rectifier **84** in response to the existence of electrostatic or magnetic fields or other conditions which might otherwise operate to fire the rectifier **94** even when no fault condition is established. However, when a fault condition is established, the capacitor **92** may be gradually discharged and the capacitor **87** may be gradually charged until the gate is placed at a positive potential relative to the cathode such as to cause firing of the rectifier **84**. The response is relatively slow and several seconds may be required to cause firing of the rectifier **84**. Thus, the circuit prevents nuisance tripping and false alarms.

The sensitivity of the system is readily adjusted by adjustment of the resistor **78** while the fixed resistor **91** is always in the coupling path to ground, to protect against excessive current from a low ohm or solid ground.

The circuit of the power divider or connector module **58** is shown in FIG. **4**. Three rectifier diodes **97**, **98** and **99** are connected in series with three resistors **100**, **101** and **102** between a circuit point **103** and No. **1**, No. **2** and No. **3** connector terminals which are connected to the terminals of motor **11** or to lines leading thereto. When, for example, the phase is such that the terminal No. **1** is positive relative to the No. **2** and No. **3** terminals, current may flow from the No. **1** terminal, through resistor **100** and diode **97** to the circuit point **103**. Circuit point **103** is connectable to the No. **8** terminal, either directly or through a dropping resistor **104**, depending upon whether the supply voltage is **220** volts or a higher voltage. The No. **8** terminal is connected to the meter **52** so that leakage current may flow through the meter **52**, the current sensing circuitry in module **55** and the potentiometer **78** to ground and then from ground through any existing leakage paths to the terminals **105** and **106**. Current flows from the No. **2** and No. **3** in a similar fashion as they become positive. The current flow through meter **52** and module **55** is thus inversely proportional to the sum of the resistance of one of the resistors **101–103**, the resistance between the No. **1** and No. **2** terminals and the No. **5** terminals of the module **55** and the average leakage resistance between ground and terminals **104–106**. A connection is made only to the No. **1** terminal so that diode **88***b* and resistor **88***d* of module **56** are not in the circuit. Any external capacitor **85***b* may be connected in parallel with relay **54**, as shown in FIG. **2**. It is noted that the internal diodes **88***a* and **88***b* and internal resistors **88***c* and **88***d* are in the path of flow of leakage current through the module **55** with the connections as shown. Such internal diodes and resistors are desirably included in the modules **55** and **56** to permit them to be used in single phase circuits, without requiring the module **58** which is used only for three phase operation. When a module is used in a single phase circuit the No. **1** and No. **2** terminals may be connected to any two wires of a three wire system, for example.

In the module **55** as illustrated in FIG. **3**, a diode **108** is shown connected between the "A" terminal and the No. **9** terminal. This diode **108** is not used in the module **55** when connected as shown in FIG. **2**, but a similar diode is provided in the module **56** for completing a circuit to the relay **38**.

The operation of the module **56** is substantially the same as that of the module **55**, module **56** being brought into operation when the key switch contact **80** is closed. As previously indicated, this arrangement is provided for use in a situation in which there has been a developing leakage condition causing the module **55** to effect continuous energization of the relay **53** and continuous energization of the red lamp **47**. When this happens, the operator has the duty of calling in his supervisor and the supervisor with a suitable key may operate the key switch and then adjust the sensitivity control potentiometer **79** for the module **56**. The red lamp **47** is always energized when the key switch is operated. This arrangement is provided for emergency situations in which even though there may be a serious leakage problem under development, it may nevertheless be desirable to temporarily continue operation of the equipment until a time is found for convenient attention to the problem without immediate disruption of service and the very bad consequences which might result therefrom. At the same time, the arrangement insures that responsible persons are warned of the developing leakage problem. An additional safeguard is provided in that regardless of the position of the key switch and regardless of whether an operator or a supervisor is giving attention to the operation of the system, the circuitry will function through one or the other of the resistors **78***a* or **79***a* to cause a conplete shut down when the leakage current exceeds a certain maximum limit value. Preferably, the resistors **78***a* and **79***a* have different values to compensate for the differences in sensitivity obtained, depending upon the position of the key switch, and to obtain a complete shut down at about the same maximum limit value.

It will be understood that modifications and variations may be effected without departing from the spirit and scope of the novel concepts of this invention.

I claim:

1. A monitor unit for an electrical power distribution system which includes isolation transformer means having primary winding means for connection to an AC supply and secondary winding means for connection to wires of a load circuit, said monitor unit comprising a step-down transformer including a primary winding for connection to said AC supply and including a secondary winding having first and second terminals, a silicon-controlled rectifier having cathode and anode electrodes and a gate electrode, means connecting one of said anode and cathode electrodes to said first terminal of said secondary winding, relay means coupled between the other of said anode and cathode electrodes and said second terminal of said secondary winding, resistance means coupled between said gate electrode and said cathode electrode, coupling circuit means for coupling said gate electrode to wires of a load circuit and for coupling said cathode electrode to a ground connection for flow of leakage current through said resistance means, stabilizing means associated with said coupling means and including capacitor means, resistance means connected in series with said capacitor means to form a series circuit, means connecting one terminal of said series circuit to said gate electrode, means connecting the other terminal of said series circuit to said ground connection, diode means for coupling said capacitor means through said diode means to said first and second terminals of said secondary winding to charge said capacitor means and to place said one terminal of said series circuit at a negative potential relative to the other terminal thereof, thereby to provide a negative bias at said gate electrode.

2. In a monitor unit as defined in claim **1**, said diode means comprising a pair of diodes and a pair of resistors connected in series with said diodes to provide a pair of diode-resistor circuits, one of said diode-resistor circuits being connected between said other terminal of said series circuit and said first terminal of said secondary winding and the other of said diode-resistor circuits being connected between said other terminal of said series circuit and said second terminal of said secondary winding.

* * * * *