March 28, 1950 J. E. FLYNN ET AL 2,502,081

PASTE DISPENSER FOR COLLAPSIBLE TUBES

Filed Sept. 5, 1945

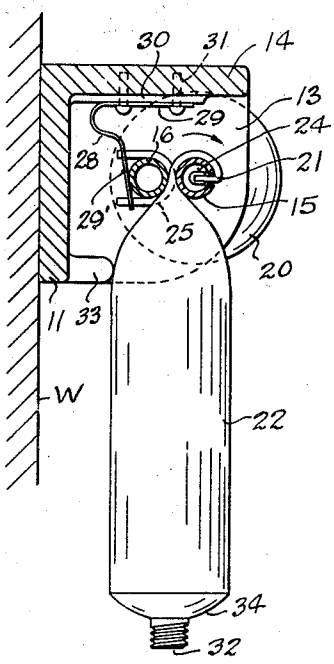

Fig. 2.

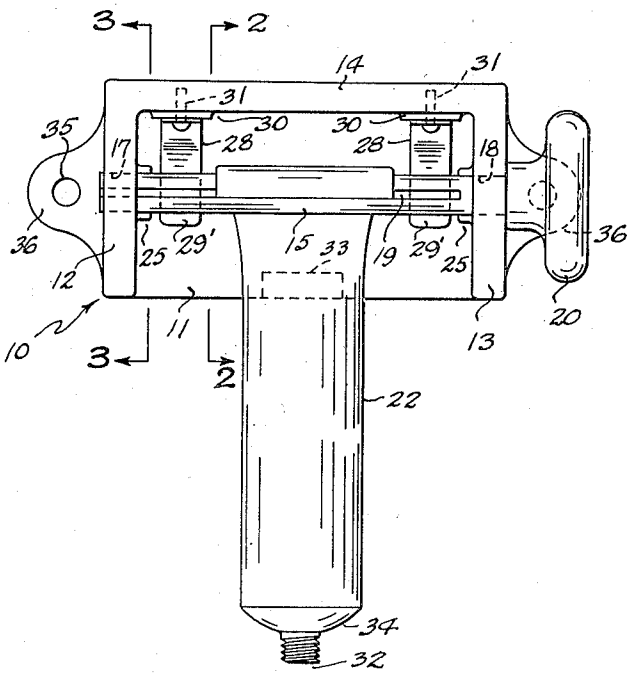

Fig. 1.

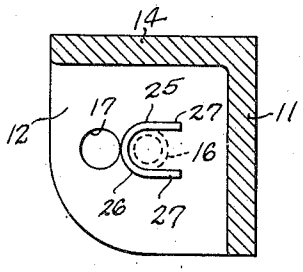

Fig. 3.

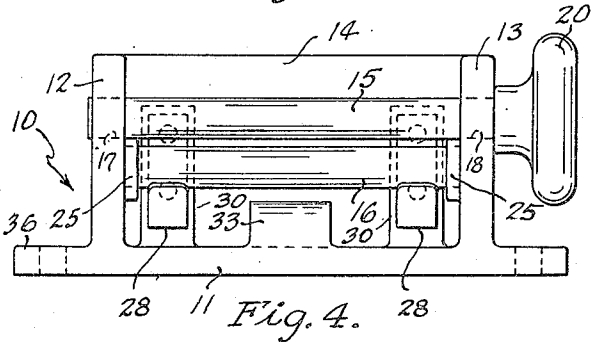

Fig. 4.

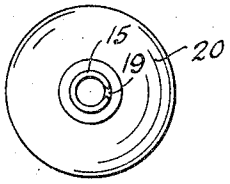

Fig. 6.

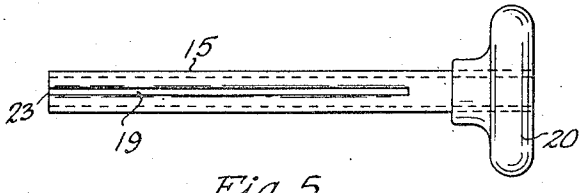

Fig. 5.



Fig. 8.

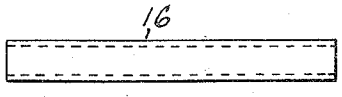

Fig. 7.

INVENTORS
Joseph Edward Flynn Jr.
Joseph James Harper Jr.
By Wooster & Davis ATTORNEYS.

Patented Mar. 28, 1950 2,502,081

UNITED STATES PATENT OFFICE

2,502,081

PASTE DISPENSER FOR COLLAPSIBLE TUBES

Joseph Edward Flynn, Stamford, and Joseph James Harper, Jr., Noroton Heights, Conn.

Application September 5, 1945, Serial No. 614,490

2 Claims. (Cl. 222—98)

1

This invention relates to a paste dispenser for collapsible tubes, and has for an object to provide a simple and improved construction to facilitate discharging of the paste from the collapsible tube in measured quantities as desired for use.

It is also an object to provide a construction to facilitate connection of the tube to the device in such a way that it is not necessary to first wind a portion of the flattened end of the tube on the pressing means to secure the tube thereto with consequent waste of some of the paste.

Another object is to provide a construction in which the collapsed tube may be easily and quickly removed from the device without the necessity of wholly unwinding it from the collapsing means.

With the foregoing and other objects in view, we have devised the construction illustrated in the accompanying drawing forming a part of this specification. It is, however, to be understood the device is not limited to the specific details of construction and arrangement shown, but may embody various changes and modifications within the scope of the invention.

In this drawing:

Fig. 1 is a front elevation of the device showing a collapsible tube in position to be operated upon;

Fig. 2 is a section substantially on the line 2—2 of Fig. 1, but showing the device mounted on a support, such, for example, as a wall W;

Fig. 3 is a section substantially on the line 3—3 of Fig. 1, but with the two rollers removed;

Fig. 4 is a bottom plan view of the device;

Fig. 5 is a side view of the operating roller removed from the device;

Fig. 6 is an end view thereof, and

Figs. 7 and 8 are a side and end view respectively of the other roller.

In the form shown by the drawing the device comprises a support or bracket 10 including a base 11, spaced end walls or holders 12 and 13 and a connecting top wall 14. It may be mounted on any suitable support, such, for example, as a wall W. Mounted between the end walls or holders 12 and 13 is a pair of rollers 15 and 16. In the form shown, the forward roller 15 is the operating roller, and is mounted in openings 17 and 18 in the walls 12 and 13 forming bearings for it. This roller comprises a hollow tube provided with a longtiudinal slot 19 in one side extending from its inner end, and at its outer end is provided with a hand knob 20 for turning the roller in use. The slot 19 is of a width to receive the flattened end portion 21 of a collapsible tube 22 when slid into the slot from the inner open

2

end 23 thereof, but this slot is of less width than the closing cap or clip 24, so that when the flattened end of the tube is slid into the slot it will be held by the clip or cap 24 against lateral removal from the slot. This prevents the collapsible tube from dropping away from the roller and holds it for the winding operation, so that it is not necessary to partially wind the tube on the roller to secure it to the roller with consequent waste of a portion of the paste in the tube. It also obviates the necessity of holding the tube in the hand when starting the winding operation. The side edges of the slot are preferably rounded so as not to cut the collapsible tube.

Cooperating with the roller 15 is the second roller 16. This is also mounted in the end walls or holders 12 and 13, but in a somewhat different manner from the roller 15. For this purpose there is provided on the inner walls of each of the end walls 12 and 13 a curved rib or stop 25 including a curved portion 26 and substantially parallel sides 27. This rib projects inwardly from the end wall and provides a bearing for each end of the roller 16. The curved portion 26 need not be continuous but could be broken away at the center if desired to permit locating of the two rollers closer together. It is desired, however, that the rollers be kept spaced a short distance to facilitate the winding operation and passage of the collapsed tube between them. This spacing of the rollers permits the wind-up roll 15 to be more easily pulled out. It also permits the collapsed tube to go through more readily and helps to prevent tearing of this tube. The spaced free ends of the side portions 27 provide an open side to each bearing, and these ends are spaced from the base wall 11 a sufficient distance to permit passage of the ends of the roller 16 between the ends of the ribs 27 and the wall 11 for insertion in the bearings 25, as indicated in Fig. 2 and the dotted lines Fig. 3. This roller 16 is pressed toward the roller 15 by means of a pair of fairly heavy springs 28. These springs may be mounted in any suitable manner and may be of different shapes but they preferably have a foot or base portion 29 seated on suitable raised bases 30 on the top wall 14, and secured thereto by any suitable means, such as rivets or screws 31. The free end portions 29' of these springs rest against the rear side of the roller 16 and press it forwardly toward the roller 15 and hold it against the stop walls 25 so that it is spaced a short distance from the roller 15 when no tube is in place. These springs and stops also keep the back roller

in position when the front roller is removed. The springs provide sufficient pressure to collapse the collapsible tube 22 between the rollers as this tube is wound onto the roller 15 and discharge the paste from the lower end or nipple 32 of this tube. These springs permit the roller 16 to yield or shift backwardly in the bearings 25 as the collapsed tube is wound onto the roller 15, and also provide a suitable friction to prevent unwinding of the tube by weight of the tube. With this arrangement and mounting of the rear roller 16 in the stops 25, which retain this roller spaced from the wind-up roller 15, the device can be loaded and unloaded without any interference with the back roller 16 or the springs 28. A rounded guide 33 is provided on the inner side of the base 11 under the rollers against which the collapsible tube 22 rests, and by which it is retained in the proper upright position and guided properly between the two rollers.

In inserting the collapsible tube 22 the hollow tubular roll 15 is drawn to the right, as shown in Fig. 1, by means of the knob or handle 20. This draws the inner end of this roller from the bearing 17 in the end wall 12 and permits the flattened end of the tube 22 to be slid into the slot 19 from the inner open end 23 of this slot. This arrangement takes any size tube and holds the tube without the necessity of winding any of it on the roller. Therefore, no winding of the tube on the roller is necessary to prevent its falling out when starting and no paste is lost. Then the roller 15 is pushed back to insert its free end in the bearing 17 in the end wall or holder 12 to the position of Fig. 1, bringing the tube 22 to a position in front of the guide 33. This guide locates the tube so the flattened end of this tube 22 will be directed between the two rollers 15 and 16, and if the cap on the threaded end 32 is removed, then by turning the handle 20 towards the operator, or clockwise as viewed in Fig. 2, the tube will be wound on the roller 15 and pass between the two rollers 15 and 16, and will be collapsed by the pressure of these two rollers, forcing the desired amount of paste from the tube. While the tube is passing between the rollers the springs 28 maintain an equal pressure on the tube, thus squeezing the paste from the tube as it passes between them, and they permit the back roller 16 to yield as the tube is wound on the front roller 15. The guide 33 keeps the tube central at all times. The free edge of this guide is preferably rounded to let the tube pass freely by it. The amount of paste dispensed is regulated by the knob or handle 20, and the desired amounts of paste are dispensed until the base or neck 34 of the tube is brought against the rollers. There is then only a small amount of paste remaining in the tube, but with this device even this may be removed by holding the left hand on the neck of the tube and pulling down slightly, and at the same time, with the right hand, turning the knob 20 and roller 15 slightly toward the wall or counterclockwise, as viewed in Fig. 2. About one turn is sufficient, which will loosen the tube sufficiently to permit the base or neck of the tube to be placed against the front of the roller 15 by the left hand, and then by pressing inwardly slowly on the tube to press it against the front of the roller 15, the remaining paste may be forced out.

To remove the collapsed tube it is merely necessary to turn the handle 20 backwardly or toward the wall a short distance, such, for example as about one or two turns, which will loosen the wound tube on the roller, then the handle 20 may be drawn to the right, as viewed in Fig. 1, drawing with it the roller 15. This will bring the collapsed tube against the end wall or holder 13 and withdraw it longitudinally from the roller 15, as it will slide longitudinally on the roller and in the slot 19, or it can be withdrawn with the left hand by sliding it to the left longitudinally on the roller. Thus the collapsed tube may be readily removed from this device without wholly unwinding it from the roller, greatly facilitating the removal of the collapsed tube and the insertion of a new filled tube.

The bracket or support may be made of various materials as desired, such as wood, metal and the like, but is preferably formed of some molded plastic material. It will be seen that this device can be used with different sizes of tubes, such as small or large toothpaste tubes or various sizes of shaving cream tubes, or tubes containing other materials. It may be mounted on any suitable support, such as a wall W by any suitable means such as screws (not shown) through openings 35 in laterally extending ears 36 provided on the support.

Having thus set forth the nature of our invention, we claim:

1. A device of the character described comprising a support including a base and spaced end walls extending outwardly from the base, a tubular roller mounted in said end walls provided with a longitudinal slot leading from the inner end thereof adapted to receive the flattened closed end of a collapsible tube by sliding it into the slot from the end thereof and of less width than the closing clip on said tube to prevent dropping of the tube from the slot, means for rotating the roller to wind the tube thereon, a second roller located at one side of the first roller with its ends between the end walls, a stop on the inner side of each of the end walls forming bearings for the ends of the second roller, said stops being substantially U-shaped recesses and positioned with their closed sides toward the first roller so as to limit movement of the second roller toward the first roller and to maintain it spaced a short distance therefrom and also to permit the second roller to move away from the first roller as the tube is wound thereon, and springs tending to shift the second roller toward the first to collapse the tube between them.

2. A device of the character described comprising a support including a base and outwardly extending spaced end walls, a tubular roller mounted in said end walls provided with a longitudinal slot in one side extending from its inner end adapted to receive the flattened closed end of a collapsible tube by sliding into the slot from said end, said slot being of less width than the closing clip of the tube to prevent its moving laterally through the slot, a second roller to the rear of the first roller, stop means on the inner sides of the end walls comprising rearwardly opening recesses forming bearings for the ends of the second roller and arranged with their closed sides forming means limiting forward movement of this roller, said end walls closing the outer sides of said recesses to cooperate with the ends of the second roller to prevent longitudinal movement of this roller, springs engaging the second roller tending to move it forwardly toward the first roller and retain it against said stop means, and means for rotating

the first roller to draw a collapsible tube between the rollers and wind it on the first roller.

JOSEPH EDWARD FLYNN.
JOSEPH JAMES HARPER, JR.

REFERENCES CITED

The following references are of record in the file of this patent:

UNITED STATES PATENTS

Number	Name	Date
1,470,534	Keiper	Oct. 9, 1923
1,698,834	Ury	Jan. 15, 1929
1,894,936	Austin	Jan. 24, 1933
1,990,929	Bonham	Feb. 12, 1935
2,008,462	Mills	July 16, 1935