June 10, 1952 J. W. MANN 2,599,930

GLUE-SETTING PLATENS

Filed March 24, 1948

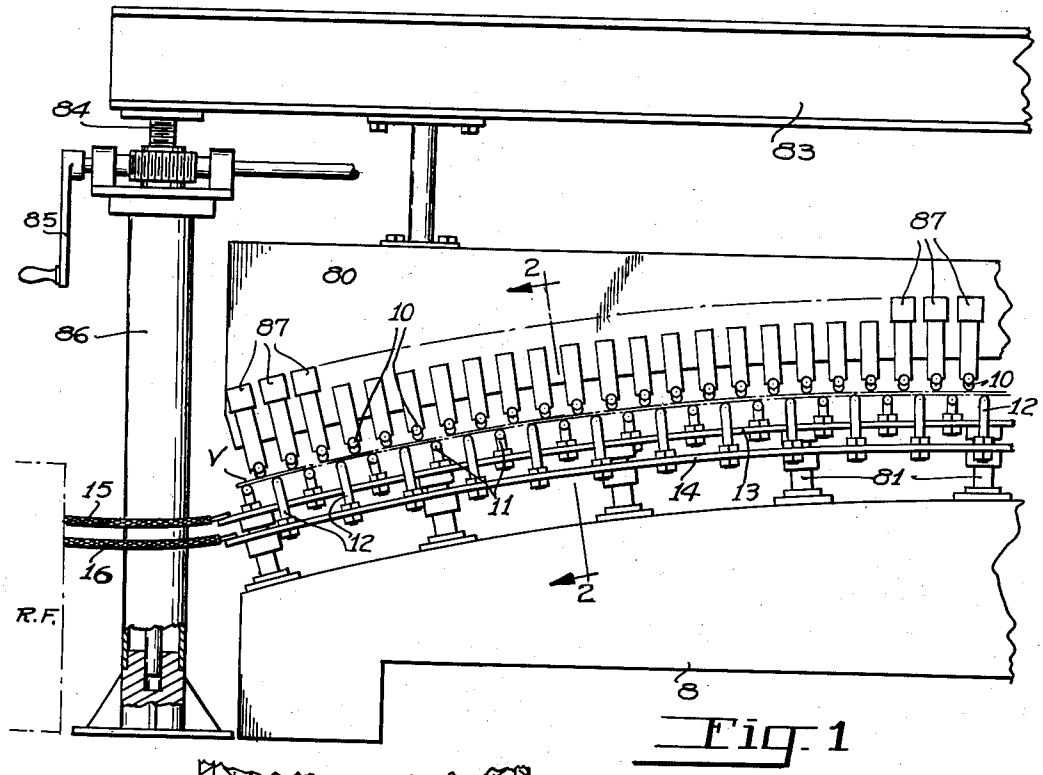

Fig. 1

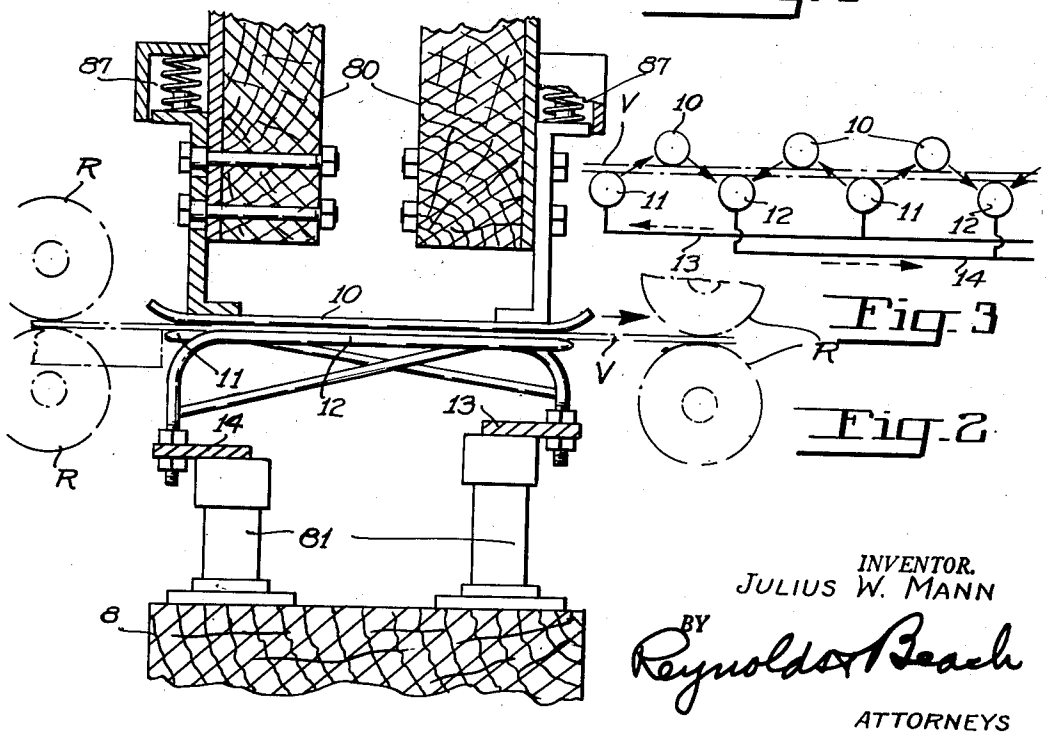

Fig. 3

Fig. 2

INVENTOR.
JULIUS W. MANN

BY Reynolds & Beach

ATTORNEYS

Patented June 10, 1952

2,599,930

UNITED STATES PATENT OFFICE

2,599,930

GLUE-SETTING PLATEN

Julius W. Mann, Steilacoom Lake, Wash.

Application March 24, 1948, Serial No. 16,702

9 Claims. (Cl. 144—281)

1

In the edge joining of veneer, preparatory to manufacturing plywood panels, it is a serious problem to maintain the abutted edges of individual veneer strips in precise registry and closely butted throughout their length, primarily because the veneer will not lie flat, but warps and bends, and hence will not permit its edge to be jointed with accuracy, nor to be held in precise registry with another similarly irregularly warped or waved piece. One procedure for maintaining such abutted edges in coincidence throughout their length, during the process of edge joining them is disclosed in the Patent No. 2,544,133, issued to Arthur C. Carlson on March 6, 1951, and involves the curvature of the veneer pieces to be joined lengthwise of their grain, to stress them and so to override warping or other localized distorting stresses and to bring each edge to be joined into a smooth curve matching that of the companion edge, and effecting their travel, transversely of their grain, under glue-setting conditions while so stressed.

If the veneer strips are engaged top and bottom at sufficiently close intervals by guide means, and if these guide means are spaced so closely as to define collectively a slot not effectively greater in width than the thickness of the veneer to be spliced, it is feasible to effect and to maintain coincidence between two abutted edges by such guide means. The present invention concerns not so much the manner in which coincidence of the abutted edges is attained and maintained, and the Carlson disclosure is referred to as one means of so doing, but rather this invention concerns the means whereby, once such coincidence is attained, the abutting edges can be permanently adhesively joined, within the short time available, and more particularly this invention concerns the means for thus joining the edges by setting the glue therebetween, in mechanism that is peculiarly suited to effecting coincidence of the edges according to the Carlson disclosure.

Such straightening and precise registry is only possible for a comparatively limited period, for the veneer and each glue line travel continuously at an appreciable rate of advance, during which period the glue by which the edges are to be joined must be set sufficiently to prevent subsequent separation when the overriding stresses that hold the panel edges straight during glue-setting are removed, and the normal, overridden stresses reassert themselves. Theoretically, by the employment of high frequency electric field discharge, and suitable glues, such as are known, by arranging that each glue line

2

is individually in a plane perpendicular to and extending between elongated electrodes of opposite potential, and crosses a number thereof, and travels for a given period of time in the direction of the length of the electrodes, which themselves are transverse to the glue lines and generally lengthwise of the direction of advance, and by proper arrangement and management of the high frequency discharge, which is usually continuous, the glue within the narrow glue line can be heated, dried and set in the period of a few seconds, while the glue line is traveling over, beneath, or between these electrodes or platen members. Practically, this poses two further problems, one electrical and the other mechanical. Mechanically, the two abutted edges of the veneer pieces must be held as nearly as possible relatively immovable as they move through the glue-setting zone. Obstacles to so doing, when they are curved longitudinally, lie in such factors as the stresses generated at the glue line by the return or tendency to return of the now homogeneous sheet of previously glued pieces to planar form the lack or small value of such stresses in the much narrower abutted veneer piece still to be joined, and the changes in such stresses as the piece advances, or arising from differences in width; friction upon and frictional differences in different parts of the platen, between the platen and the advancing veneer; minute differences in thickness of the veneer, either as between the two abutted pieces or in different parts of the same piece; the impossibility of creating and maintaining precisely the same spacing between upper and lower platen members in all their parts; the presence or absence of glue deposits on the platens, etc. Electrically, the field discharge must be maintained of substantially equal density throughout, and never characteristically nor even momentarily weaker at one point than at another, notwithstanding the mechanical factors above which predispose to that undesired end or other more essentially electrical factors, such as variations in the spacings of complemental electrodes at different points. Care must be taken that the high frequency discharge does not break down any guide means located intermediate electrodes of opposite potential.

The desideratum, in such a platen, is to secure and to maintain, during travel of the glue line through the high frequency field, adequate and equal contact between all areas of the platen members and the advancing veneer strips, and thereby to secure equalized distribution of the

high frequency heating effect throughout all portions of the glue line, yet without impeding the advance of the veneer strips, without disturbing their stressed and accurately registering positional relationship, without lessening the pressure urging them together at any point, or the substantial uniformity of such pressure at all points, and without likelihood of damage to the strips or to the veneer sheet constituted by the joined strips.

The platen members of the Carlson patent, referred to above, while intended to accomplish the ends above, and accomplishing them with a reasonable degree of satisfaction, nevertheless did not accomplish them as fully as is desirable, but more especially were found to be difficult to manufacture, to adjust to position, and to maintain in adjusted position. Moreover, they were rather unyielding, and in particular were unable to yield in localized areas for minor localized departures from accuracy of the veneer strips, caused either by differences in thickness of such strips or from minor departures of a strip from its correct position. Neither was it possible to adjust in one region to compensate for differences of pressure or in frictional resistance, as compared to other regions. The platen of the Carlson patent, largely for such reasons, was expensive to make and to maintain in proper working order. Additionally it was difficult at times to maintain, at one and the same time, adequate contact with the veneer, and adequate dielectric spacing of the platen members of different potential. Still further, the field intensity varied in different parts of so large a platen as is required, and difficulty was experienced in maintaining adequate uniformity of curing in different parts of the glue line.

It is the object of the present invention to provide platen members particularly suited to use in the Carlson veneer edge gluing machine and method, which to a high degree will be free of the difficulties mentioned, and which therefore will provide for use in the Carlson edge gluing machine and method a platen device which in the space of a few seconds will accomplish proper, equally distributed, and thorough setting of the glue throughout all parts of the glue line.

More particularly, it is an object of the present invention to provide a platen of the nature indicated, wherein, mechanically, the pieces to be joined are held relatively immobile in the correct longitudinal curvature, while they advance through the glue-setting zone, notwithstanding changing stresses in the sheet and in the piece to be joined thereto, or frictional differences, or differences in the thickness of the pieces, or minor mechanical imperfections in the platen itself, and wherein electrically, rapid and uniform bonding is promoted by disposing the glue line in coincidence with the lines of force, and by initially equally and positively distributing the field discharge throughout the length of the glue line and throughout the width of the glue-setting zone, and by avoiding any structure or procedure that would disturb such distribution, notwithstanding transient mechanical variations that can scarcely be avoided.

Still more specifically, it is an object to define the platen and glue-setting zone by a plurality of presser elements, some or all of which are preferably in the form of fingers, all of which extend in the direction of the veneer's advance, and which therefore create a minimum of friction or other disturbance in the veneer's positioning, which are urged together just sufficiently to insure their relative immobility, yet certain whereof are individually yieldable for the accommodation of transient variations, and some or all of which are relatively arranged electrically to effect a sufficient and substantially equalized distribution throughout the glue line as it advances through the glue-setting zone, yet without probability of undesirable leakage.

With the above objects in mind, and others as will become apparent hereinafter, my invention comprises the novel glue setting platen, which is shown in the accompanying drawings in a representative form, and which will be hereinafter described, and the principles which distinguish the same will be hereinafter set forth in the claims.

Figure 1 is in general a side elevation through one-half of the platen and associated supporting mechanism, the viewpoint being selected generally parallel to the surfaces of the veneer.

Figure 2 is a transverse sectional view through the platen, as indicated by the line 2—2 of Figure 1.

Figure 3 is a diagrammatic view illustrating the discharge path from and electrical connections to the fingers of the platen, in one form of arrangement.

As is explained in detail in the Carlson patent referred to above, individual strips of veneer, which are to be joined into a continuous sheet, are disposed transversely upon a table, along which they are advanced edgewise. Glue (meaning any suitable adhesive or adhesive supplement settable promptly by high frequency heating) having been applied to one or both edges of adjoining sheets which are to be abutted (these edges having been first jointed true and straight), these glue-coated edges are pressed into close contact throughout their length, and are so held, and are held against buckling, while they travel conjointly edgewise in abutted relationship. As they travel, and as one means to eliminate localized distortions, and to effect contact throughout their abutting edges, the strips are progressively curved in a direction lengthwise of the individual strips, but transverse to their direction of advance. This stresses each strip materially, the over-all stress overcoming the localized stresses such as cause warping, and thereby is effected the "straightening" of each abutted edge into a single smooth curve, which registers with and matches very accurately the similarly caused curvature of the abutted edge of the adjoining strip. While two such abutted strips are held thus stressed and curved, and while they are being pressed closely together, they pass through a zone of high frequency electric field discharge wherein the discharge is along lines or planes parallel to the glue line, which induces such heating in the glue line (provided the field discharge is well distributed throughout all parts of the glue line) as to effect setting of the glue in the course of a few seconds. Once the glue is set, as it should be after some four or five seconds of high frequency heating, the curvature of the strips, now joined into one continuous sheet, may be relaxed, and the sheet assumes a planar form. The present invention, as has been indicated above, is concerned with the platen for producing glue-setting conditions by high frequency heating while holding the advancing strips thus abutted, and especially when they are so curved. For fuller details of the ma-

chine and method as a whole, reference is made again to the Carlson patent.

The veneer strips are represented in the drawings at V, and such strips are fed through by mechanism typified by the pressure feed rollers R, which are suitably driven, and certain pairs of which may be arranged transversely of the path of advance to give to the veneer strips their curvature. The curvature of the veneer strips is a maximum while they are passing through the platens. The sense of travel is immaterial, insofar as it concerns the platen structure, and purely for convenience of reference an arbitrary sense has been shown in Figure 2.

The platen comprises suitable upper and lower supports 80 and 8, curved to the desired transverse curvature, and whereon are supported a large number of presser elements shown in the form of fingers 10, 11, and 12 arranged some above the path of the veneer and some below it, and in a pattern which conforms generally to the desired or expected curvature of the veneer strips V. Each one of the presser elements individually is arranged in a direction lengthwise of the path of advance of the veneer, and thereby least impedes the advance of the veneer, or disturbs the relationship of one piece to the next.

Mechanically considered, the lower fingers 11 and 12 are spaced rather closely together, for example, at two-inch intervals. Being individually rigidly but vertically adjustably mounted (see Figure 2) by a downwardly directed end 17 only received in apertures in a supporting bar 13 or 14, respectively, they can be initially adjusted by the adjusting nuts 18 so that their horizontal portions define collectively precisely the correct curvature to be imparted to the veneer V, and, being individually quite rigid, and mounted rigidly, collectively they afford an adequate curvature-defining support for the veneer. The veneer is pressed downwardly upon this support by the upper fingers 10, each disposed intermediate a pair of fingers 11 and 12. These fingers 10 are individually rather rigid, and collectively are rather rigidly supported, but each one is individually yieldably mounted relative to the frame cross bar 80, as indicated at 87. They cooperate with the lower fingers 11 and 12 not only to hold the advancing veneer to the intended curvature, but also by their yielding to accommodate transient or localized variations in thickness, or veneer of slightly varying thickness. Collective adjustability of the upper platen member is achieved by adjusting the main frame cross bar 83, whence depends the subframe cross bar 80, from frame uprights 86 through a jack screw 84 and adjusting means 85. By such means adjustability of platen spacing is attained, to accommodate veneers of different thicknesses. The bus bars 13 and 14, which are the immediate supports of all the fingers 11 and 12, respectively, are nonyieldably supported from the main frame lower cross bar 8 by electrical insulators 81.

Electrically considered, all the fingers 11 and all the fingers 12 are connected together, and to the respectively opposite terminals of a source of high frequency energy, indicated at R. F. in Figure 1. The successive fingers 11, 12, etc. being equidistantly spaced, are also spaced far enough apart to avoid material leakage across the intervening air gap. The bar 13 constitutes a bus, to which all the fingers 11 are electrically connected, and the bar 14 is a second bus, to which all the fingers 12 are electrically connected; the two buses are widely separated to avoid the likelihood of discharge therebetween. Through the respective leads 15 and 16 the fingers are connected to the opposite terminals of the high frequency source.

Electrically the device will operate satisfactorily—indeed, certain difficulties can be avoided—if the presser elements which as the fingers 10 are not conductive, but serve merely as mechanical pressers. Such is the preferred form. However, if each finger 10 is merely floating, it may serve as a neutral conductor intermediate the charged conductors 11 and 12 which flank it. The fingers 10, however, must not be connected electrically to one another, nor grounded, but if they are to be part of the electrical system, they must be floating. This means that while being floating members, two or more such fingers may be connected together and used in such joined form, but if such a joined group of fingers were to be of sufficient size to be resonant with the frequency of the generator being employed to supply the high frequency energy, then circulating currents may occur which will dissipate energy to an undesirable degree. In such latter case the size of such combinations should be broken up into components of smaller and nonresonant size.

As the veneer, curved transversely to its path of advance, and closely edge-abutted, advances through the machine, the glue line between two abutted strips enters between the upper fingers 10 and the lower fingers 11 and 12. High frequency current being applied to the respective groups of fingers 11 and 12, does not readily pass through the thickness of the veneer, and the adjoining and alternately arranged fingers 11 and 12 are spaced sufficiently apart that leakage between them is minimized. However, as the moist glue line arrives within the platen area, this offers a convenient leakage path coinciding with the discharge path and the high frequency discharge is localized in this glue line and passes, for instance, from the fingers 11, and thence along the glue line to the fingers 12. Should the fingers 10 be conductive, the discharge between fingers 11 and 12 will be via fingers 10, which even more thoroughly requires the discharge to traverse the glue line. It will be understood, of course, that this is merey a typical and instantaneous relationship, constantly changing. However, because of the mechanical pressure of the individual fingers closely against the opposite veneer surfaces, because of the leakage path thus afforded, and because of the close proximity through this path as between the fingers 11 and 12 direct, or between the fingers 10 and the fingers of the respective groups 11 and 12, the high frequency current is distributed throughout all parts of the glue line, and substantially is equalized in all parts thereof, with the result that there is within the few seconds required to traverse the platen adequate setting of the glue throughout the entire glue line, before the joint passes from the platen, and the adjoining strips remain thus joined.

I claim as my invention:

1. In combination, a glue-setting platen for edge-gluing veneer strips comprising a first plurality of generally parallel, generally equidistantly spaced-apart elongated presser elements, cooperatively defining a surface conforming to one surface of the work to which the platen is to be applied, means electrically connecting all alternate pressure elements, and all the intermediate presser elemnts, rspectively, into two groups, means to connect the two such groups to the opposite terminals of a high frequency

source, and a second plurality of elongated presser elements generally parallel to the presser elements of the first plurality, and arranged at the opposite side of the work from the cooperatively defining a surface conforming to the surface of the work which is opposite that engaged by, the first plurality of presser elements, and means to advance veneer strips edgewise, in edge-abutting relationship and with adhesive applied to such abutted edges, in the direction generally parallel to said presser elements, for setting of the adhesive by high frequency discharge between pressure members of opposite potential, and during travel lengthwise of such presser members.

2. In combination, a glue-setting platen for edge-gluing veneer strips comprising a plurality of generally parallel, generally equidistantly spaced-apart fingers cooperatively defining a surface conforming to one surface of the veneer strips to which the platen is to be applied, means electrically connecting all the alternate, and all the intermediate fingers, respectively, into two groups, for connection to the opposite terminals of a high frequency current source, elongated presser means disposed generally parallel to the fingers of the two groups, and collectively shaped complementally to the platen, and spaced therefrom for engagement with the opposite surface of the veneer strips, and means to advance veneer strips edgewise, while in edge-abutting relationship and with glue between their abutted edges, between the platen fingers and the presser means, and lengthwise of such fingers and presser means during high frequency discharge between the fingers.

3. The combination of claim 2, characterized in that the veneer-advancing means operates continuously to advance the veneer strips at a substantially constant rate, and in that the high frequency discharge is substatntially constant, whereby each glue line traverses the length of the platen fingers, while disposed transversely of such fingers but substantially perpendicular to the collective surface defined by the same, through a time interval which is substantially the same for each glue line.

4. A glue-setting platen as in claim 2, wherein each platen-forming finger is rigid, but is individually mounted for adjustment to conform to the intended curvature of the platen as a whole.

5. The combination of claim 2, including means yieldable as between the platen fingers and the presser means to accommodate limited overall or localized departures from the designed thickness of any work which passes between the fingers and the presser means.

6. A glue-setting platen as in claim 2, including means resiliently supporting the individual pressure means for bodily separation from and pressure towards the platen.

7. A glue-setting platen as in claim 6, including means to adjust the spacing between the platen fingers collectively and the pressure means.

8. Mechanism for edge-gluing wood veneer strips, as defined in claim 1, wherein, in the glue-setting platen, all the elongated presser elements are grouped above and below the path of advance of the veneer strips, those elements which are disposed above the path of advance being arranged in a pattern which is curved transversely of such path of advance, with the individual elements directed along that path, and all the presser elements disposed below such path being similarly arranged and individually directed, to leave a transversely curved space of a thickness throughout corresponding to the thickness of edge-abutted veneer strips which are thus curved in the direction of their length, and held so curved by the presser elements, while such strips are being advanced by the advancing means.

9. In combination, a glue-setting platen for edge-gluing wood veneer strips comprising a plurality of generally parallel, generally equidistantly spaced-apart elongated presser elements cooperatively and collectively defining a surface conforming to one surface of the sheet of veneer strips to which the platen is to be applied, means electrically connecting all alternate presser elements and all the intermediate presser elements, respectively, into two groups, for connection to the opposite terminals of a high frequency current source, hold-down means cooperating with the said presser elements, and spaced from the surface defined by the latter by only the thickness of the sheet of veneer strips to which the platen is to be applied, for cooperation with said presser elements collectively to retain all edge-abutted veneer strips located therebetween in rgistry along their abutted edges, and means to advance the veneer strips edgewise, in edge-abutting relationship and with adhesive applied to such abutted edges, in the direction generally parallel to said presser elements, for setting of the adhesive by high frequency discharge between presser members of opposite potential, during travel of the veneer strips lengthwise of said presser elements.

JULIUS W. MANN.

REFERENCES CITED

The following references are of record in the file of this patent:

UNITED STATES PATENTS

Number	Name	Date
1,702,185	Weber	Feb. 12, 1929
1,706,675	Osgood	Mar. 26, 1929
1,739,088	Perry	Dec. 10, 1929
2,288,269	Crandell	June 30, 1942
2,290,762	Miller	July 21, 1942
2,321,131	Crandell	June 8, 1943
2,324,068	Crandell	July 13, 1943
2,399,348	Hobbs	Apr. 30, 1946
2,433,067	Russell	Dec. 23, 1947
2,457,498	Russell	Dec. 28, 1948