E. H. PEABODY & T. B. STILLMAN, JR.

OIL BURNING APPARATUS.

APPLICATION FILED JULY 19, 1915.

1,261,281.

Patented Apr. 2, 1918.

2 SHEETS—SHEET 1.

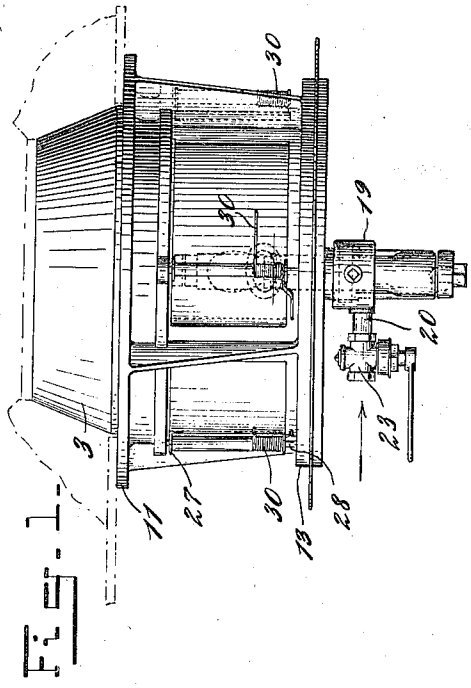

Fig. 1.

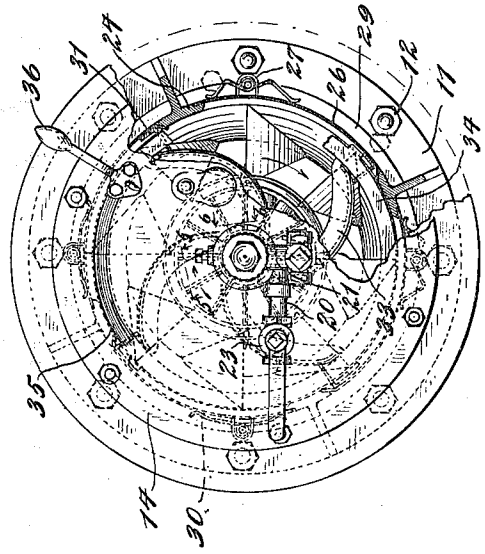

Fig. 2.

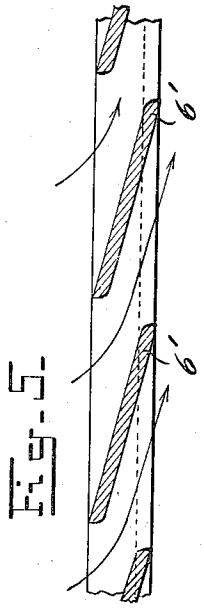

Fig. 5.

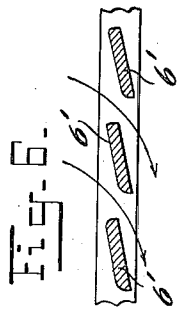

Fig. 6.

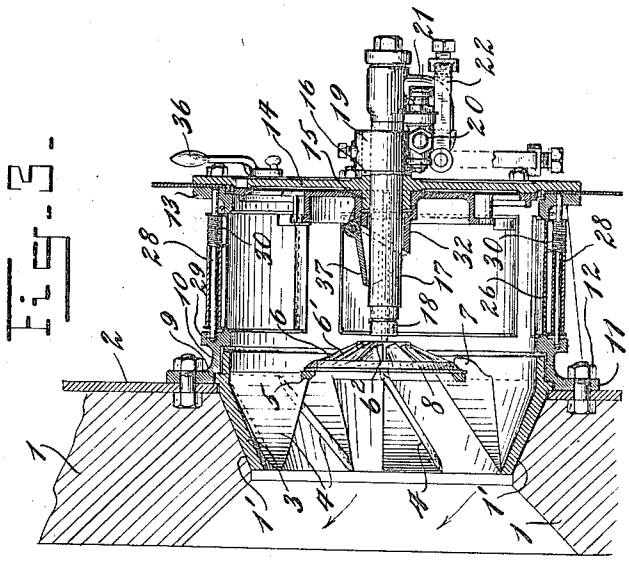

Fig. 3.

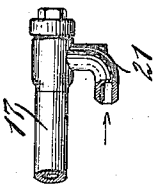

Fig. 4.

WITNESSES:

C. F. Reynolds

W. A. Darling

INVENTORS.

Ernest H. Peabody

Thomas B. Stillman Jr

BY Gifford Burr

Their ATTORNEYS.

E. H. PEABODY & T. B. STILLMAN, Jr.

OIL BURNING APPARATUS.

APPLICATION FILED JULY 19, 1915.

1,261,281.

Patented Apr. 2, 1918.

2 SHEETS—SHEET 2.

Fig. 7.

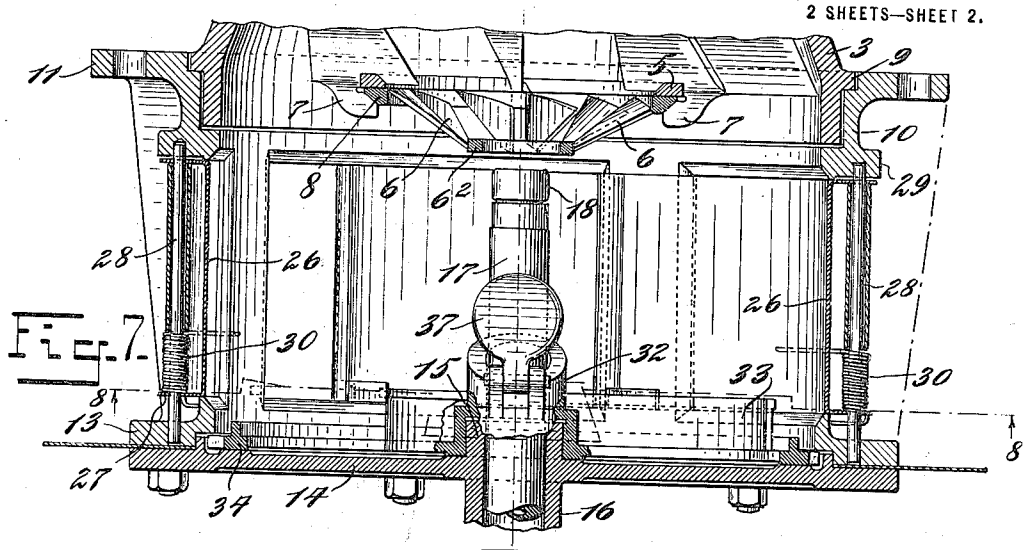

Fig. 8.

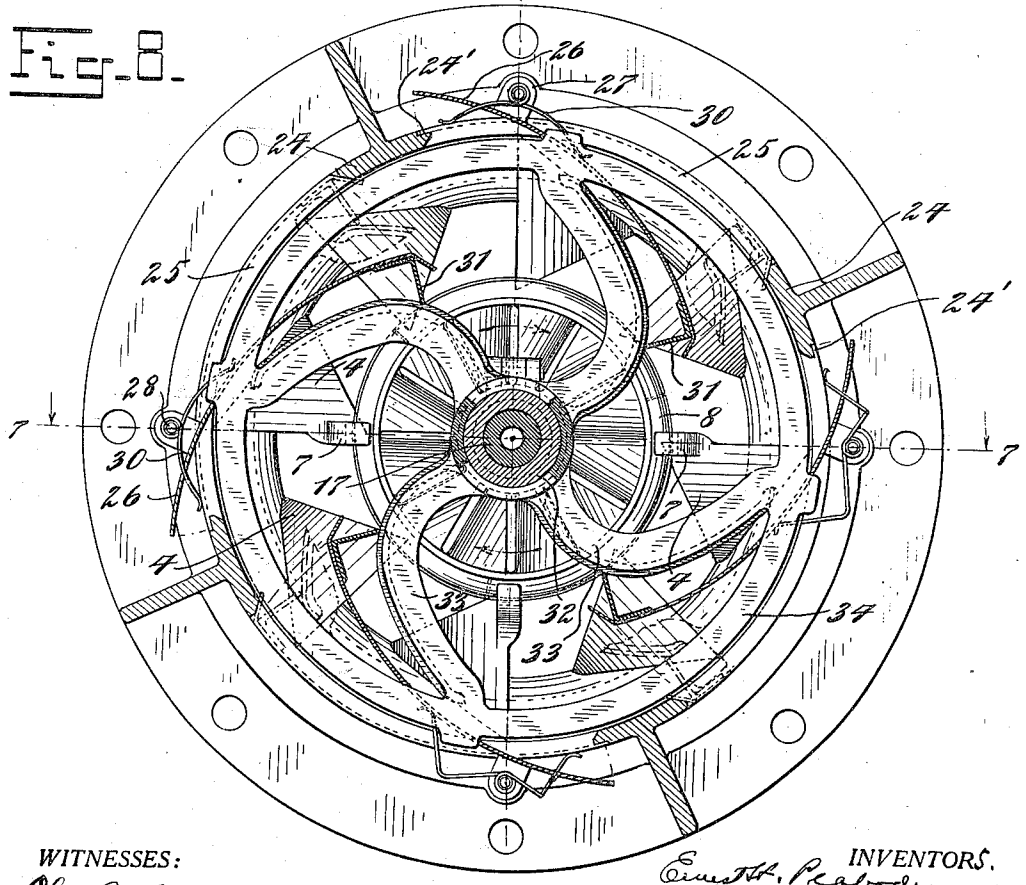

WITNESSES:

C. F. Reylmeyer

W. A. Parling

INVENTORS.

Ernest H. Peabody

Thomas B. Stillman Jr.

BY Gifford Bell

Their ATTORNEYS.

UNITED STATES PATENT OFFICE.

ERNEST H. PEABODY, OF NEW YORK, N. Y., AND THOMAS B. STILLMAN, JR., OF HOBOKEN, NEW JERSEY, ASSIGNORS TO THE BABCOCK & WILCOX COMPANY, OF BAYONNE, NEW JERSEY, A CORPORATION OF NEW JERSEY.

OIL-BURNING APPARATUS.

1,261,281. Specification of Letters Patent. Patented Apr. 2, 1918.

Application filed July 19, 1915. Serial No. 40,536.

To all whom it may concern:

Be it known that we, ERNEST H. PEABODY and THOMAS B. STILLMAN, Jr., citizens of the United States, and residing at New York city, borough of Manhattan, in the county of New York and State of New York, and Hoboken, in the county of Hudson and State of New Jersey, respectively, have invented certain new and useful Improvements in Oil-Burning Apparatus, of which the following is a specification.

Our invention relates to oil-burning apparatus and will be understood by reference to the accompanying drawings in which Figure 1 is a plan view of one form of apparatus designed by us; Fig. 2 a front view of the same, partly in section; Fig. 3 a central longitudinal vertical section, the burner being shown in elevation; Fig. 4 a detail of the burner; Fig. 5 a section on the plane of the line 5—5 of Fig. 2; Fig. 6 a section on the plane of the line 6—6 of Fig. 2; Fig. 7 a horizontal section on the plane of the line 7—7 of Fig. 8; and Fig. 8 a vertical section on the plane of the line 8—8 of Fig. 7. Similar reference numerals indicate similar parts in the several views.

Referring to the drawings the numeral 1 designates a portion of the furnace brickwork to which is secured the usual furnace front plate 2. The furnace front is formed with a conical opening 1′ in which is seated a cone-shaped casting 3. The latter is so placed that the smaller end is directed toward the furnace. The cone 3 has on its inner surface a plurality of blades 4. These blades are normal to the surface of the cone and at an angle of approximately 60° to the plane of the furnace front plate. They are substantially triangular in shape having two straight sides and a curved side which corresponds to the curvature of the surface of the cone. A central ring 5 is cast with the blades 4 to strengthen the blades and against said ring is supported an air-deflecting plate 6. This latter comprises a plurality of blades 6′ extending between a central ring 6^2, and an outer ring 8, and is constructed in substantial accordance with Patent No. 1,126,654 to E. H. Peabody, January 26, 1915. A flat air-deflecting plate, like that described in Patent No. 1,086,715 to D. J. Irish may be used. In both forms of the air-deflecting plate shown in said patents, the blades are spaced apart to provide apertures for the admission of air, and are inclined to give the air a whirling motion. As shown in Fig. 8 some of the blades 4 are formed with lugs 7 adapted to engage the outer ring 8 of the air-deflecting plate 6. The lugs 7 support the air-deflecting plate 6 in a central position, and centrally with the burner tip.

The cone 3 is formed with a circumferential rib 9 which fits a recess in a cast cylindrical box or casing 10. The flange 11 of said box is provided with openings through which bolts 12 are passed to secure the box to the furnace front plate. The front of the box is formed with a flange 13 to which is fastened, by stud bolts, a front or cover plate 14. The cover plate 14 has a central opening surrounding which, and extending on both sides of the plate, are hubs 15 and 16. One purpose of these hubs is to support the burner barrel 17. This burner may be of any appropriate type, as for example, that described in Patents Nos. 1,007,793, 1,007,794 and 1,007,795. As shown in the drawings, the burner tip 18 is set in close proximity to the air-deflecting plate 6, so that it is possible to see the stream of atomized oil as it issues from the burner tip.

Supported on the hub 16 is a collar 19, having a chamber, not shown, formed therein. This collar may be adjusted as desired on the hub 16 and clamped in position by a set screw. To the inlet end of the chamber in collar 19 is connected an oil supply pipe 20, and to the outlet end of the chamber a gooseneck connection 21 is made to the burner body, as shown in Fig. 4. Pivoted to the underside of the collar 19 is a yoke 22 which, when the burner is placed in position, is swung upward and clamped by means of a set screw, against a flat face on the gooseneck 21. In the oil inlet pipe 20 is a quick closing valve 23. The inner surfaces of the hubs 15 and 16 are machined to give a sliding fit between the hubs and the burner barrel.

The body of the box is formed with ribs 24 between which are the openings 25, these openings being provided for the admission of air as more fully described hereinafter. These openings may be closed more or less by doors 26, which doors are curved to con-

form to the body of the box. The doors are formed with two lugs 27, one on each side of the doors, through which lugs is passed a pin 28 which serves as a hinge for the doors. The pin is supported in bearings in the front flange 13 and a ring 29 cast with the body of the box. A spring 30 is coiled around the pin 28, one end of the spring bearing upon the door and the other resting on the casting. The doors 26 are normally in the position shown in Fig. 8, that is, wide open, the springs 30 tending to hold the doors in such position. At the free end of each door, on the inside thereof, is a clip 31 in the form of an angle-iron, which clips rest upon the arms of a spider-shaped cam. This latter comprises a central collar 32 which bears, and rotates upon the hub 15, as shown in Fig. 7. From the collar 32 extend the arms 33 which arms constitute the cam surfaces. These cam surfaces extend to the ring 34 with which they are cast integral. The front plate 14 is formed with a slot 35 (see Fig. 2) through which passes an operating handle 36 connected to the ring 34.

With the doors in the position shown in Fig. 8, that is, wide open, the handle 36 will be at the left-hand end of its travel. When it is desired to close the doors the handle 36 is moved toward the right, and in such movement the clips 31 ride over the cam faces 33, thereby raising the doors 26 about their hinges 28, to a more or less closed position. When the handle 36 is at the right-hand end of its travel the doors will be completely closed. As shown in Fig. 8 the upper sides of the ribs 24 are formed with seats 24′ for one end of the door, and the sides of the ribs 24 are beveled to accommodate the face of the other end of the door and to prevent the door blowing out.

The inner end of the collar 32 has pivoted thereto a flap door 37, which flap when the burner is withdrawn closes the opening through the collar to prevent any inrush of air.

To still more thoroughly explain the nature of our invention we will describe a specific example of practising it when using the air-deflecting plate and cone as shown in the drawings. The air-deflecting plate 6 had twelve blades 6′ so set that the distance *a*—*b* between the blades was about $\frac{1}{16}$ of an inch at the inner ring 6^2 and about $\frac{3}{16}$ of an inch at the outer ring 8. The outer diameter of the ring 8 was approximately seven inches. The burner tip was set about $\frac{3}{8}$ of an inch away from the inner ring 6^2 of the air-deflecting plate 6. The depth of the cone 3 was approximately five and one-half inches, and the diameter of the smaller end of the cone, that end toward the furnace, was approximately eleven and one-half inches. There were eight of the blades 4 set approximately at an angle of 60° to the plane of the furnace front plate. The diameter of the larger end of the cone was about fifteen inches, so that there was an effective area between the ring 8 and the cone 3, of approximately 138 square inches. The pressure on the oil was about 125 pounds. Ignition began in a plane practically inside of the inner ring 6^2 of the air-deflecting plate 6. The length of the flame depended upon the amount of oil burned.

The apparatus described is adapted more particularly for use with natural draft, and in operation all of the air for combustion enters through the doors 26, the better practice being to open the doors wide and to keep them so. If desired to vary the capacity, the damper in the breeching may be adjusted. If the air is throttled at the burner it tends to drift through the air-deflecting plate 6, and the cone 3, the velocity in that case not being sufficient to properly mix the air with the stream of atomized oil. One function of the plate 6 is to give a rotating motion to the air as described in Patents Nos. 1,086,715 and 1,126,654. Another function of the plate 6 is to prevent the air blowing the flame away from the burner tip, which, if allowed to occur would set up violent pulsations in the furnace and in the boiler room.

The plate 6 is so set relatively to cone 3 that approximately 10% of the air entering the box through the doors 26 passes through the plate 6. The air passing through the plate 6 between the blades 6′ imparts a whirling motion to the flame and this motion is in turn imparted to the main air supply passing around the outer ring 8 so as to assist the main supply in intermingling with the atomized oil. An initial rotation of the entering air is produced by the doors 26, this rotation being maintained until after the air passes the small end of the cone 3. The rotation produced by the center deflecting plate 6, and that produced by the doors 26 are in the same direction. The intermingling of the air and atomized oil is also materially assisted by so placing the cone 3 that its smaller end is turned toward the furnace, that is, the inclination of the wall of the cone toward the furnace directs the air toward the center of the stream of atomized oil.

What we claim and desire to secure by Letters Patent of the United States is:—

1. In an oil burning apparatus the combination of a burner, a furnace chamber, a mixing chamber and means for admitting air thereto, an air deflecting plate in proximity to the burner tip and at the air inlet end of the mixing chamber, and blades secured to the inner wall of said mixing chamber.

2. In an oil burning apparatus the combination of a burner, a furnace chamber, a cone-shaped mixing chamber and means for admitting air thereto, an air deflecting plate in proximity to the burner tip and at the air inlet end of the mixing chamber, and blades secured to the inner wall of said mixing chamber.

3. In an oil burning apparatus the combination of a burner, a furnace chamber, a mixing chamber and means for admitting air thereto, an air deflecting plate at the air inlet end of the mixing chamber and of less diameter than said end of the mixing chamber, and blades secured to the inner wall of said mixing chamber.

4. In an oil burning apparatus the combination of a burner, a cone-shaped mixing chamber having its smaller end directed toward the furnace and means for admitting air thereto, an air deflecting device at the larger end of the mixing chamber and of less diameter than said end of the mixing chamber, and blades within said mixing chamber for the purpose described.

5. In an oil burning apparatus, the combination of a burner, a cone-shaped mixing chamber having its smaller end directed toward the furnace, an air deflecting plate at the larger end of the mixing chamber and in proximity to the burner tip, means for admitting air to the mixing chamber and inclined blades within the mixing chamber for the purpose described.

6. In an oil burning apparatus the combination of a burner, a mixing chamber, an air deflecting device substantially in front of the burner tip and at the air inlet end of the mixing chamber, and a casing surrounding the burner and air deflecting device, said casing having openings for the admission of air for combustion.

7. In an oil burning apparatus the combination of a burner, a mixing chamber, an air deflecting device substantially in front of the burner tip and at the air inlet end of the mixing chamber, a casing surrounding the burner and air deflecting device, said casing having openings for the admission of air for combustion, and inclined blades in the mixing chamber for the purpose described.

8. In an oil burning apparatus the combination of a burner, a cone-shaped mixing chamber having its smaller end directed toward the furnace, an air deflecting plate at the larger end of the mixing chamber and less than the diameter of the mixing chamber, and a casing surrounding the burner and air deflecting plate, said casing having openings for the admission of air for combustion.

9. In an oil-burning apparatus, the combination of a burner, a cone-shaped mixing chamber having its smaller end directed toward the furnace, blades secured to the inner wall of said mixing chamber, said blades being inclined at an angle approximately 60° to the plane of the base of the cone, an air-deflecting plate placed at the larger end of the mixing chamber and in proximity to the tip of said burner, and means for admitting air to the said mixing chamber.

10. In an oil-burning apparatus, the combination of a burner, a cone-shaped mixing chamber having its smaller end directed toward the furnace, an air-deflecting plate placed at the larger end of the mixing chamber, said deflecting plate being of less diameter than the diameter of the larger end of the mixing chamber, a casing surrounding the burner and air deflecting plate, said casing having openings for the admission of air for combustion, and means for controlling the volume of entering air.

In testimony whereof we have hereunto signed our names in the presence of two subscribing witnesses.

ERNEST H. PEABODY.
THOMAS B. STILLMAN, JR.

Witnesses:
M. E. McNINCH,
CHARLES S. JONES.