Feb. 13, 1923. 1,445,344.

S. MOLTRUP.

TOOL.

FILED MAY 5, 1922. 2 SHEETS—SHEET 1.

Fig. 1.

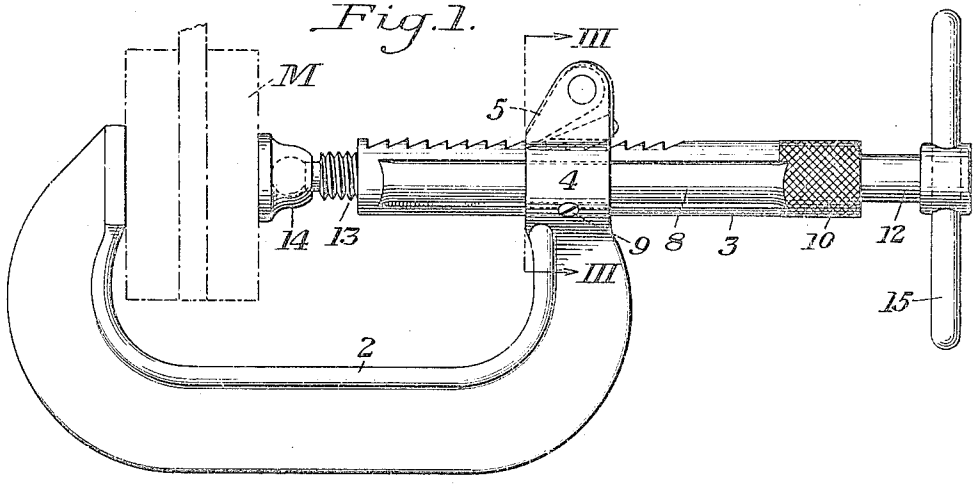

Fig. 2.

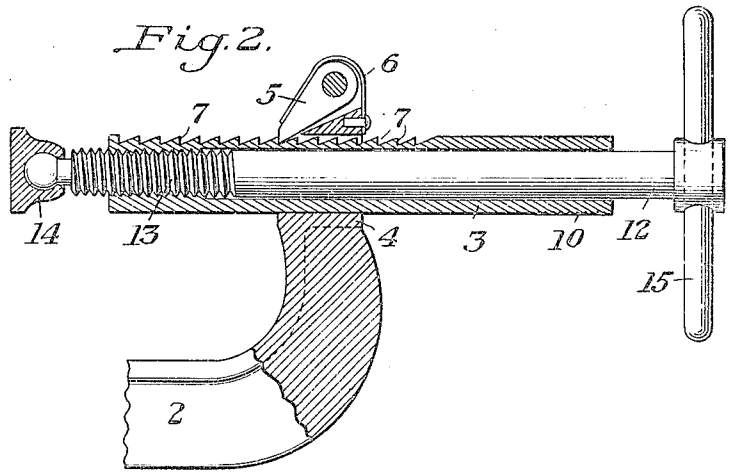

Fig. 3.

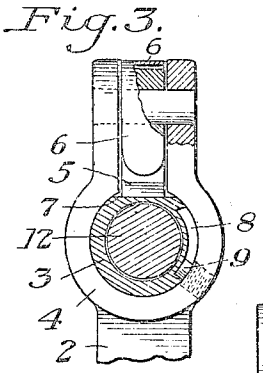

Fig. 4.

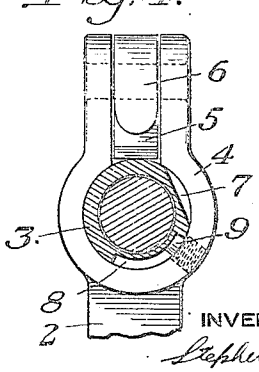

Fig. 5.

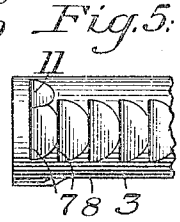

INVENTOR

Stephen Moltrup.

by Byrnes, Stebbins, Burgess & Parmelee

his Attys.

Feb. 13, 1923. 1,445,344.

S. MOLTRUP.

TOOL.

FILED MAY 5, 1922.

2 SHEETS—SHEET 2.

Fig. 6.

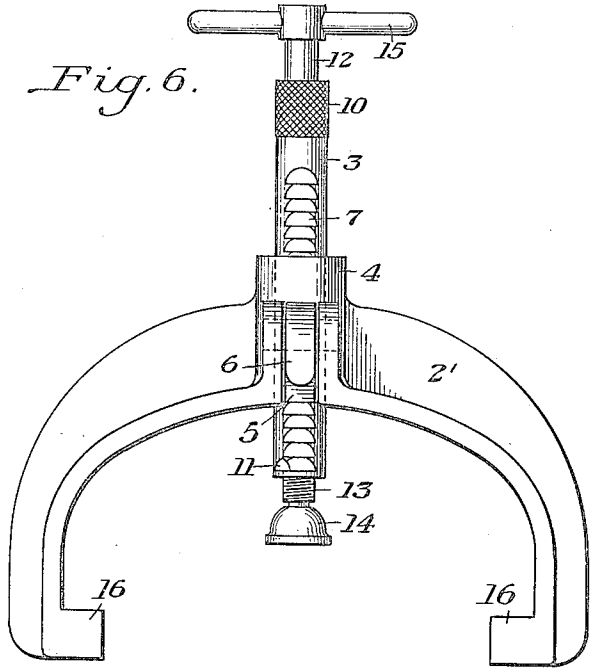

Fig. 7.

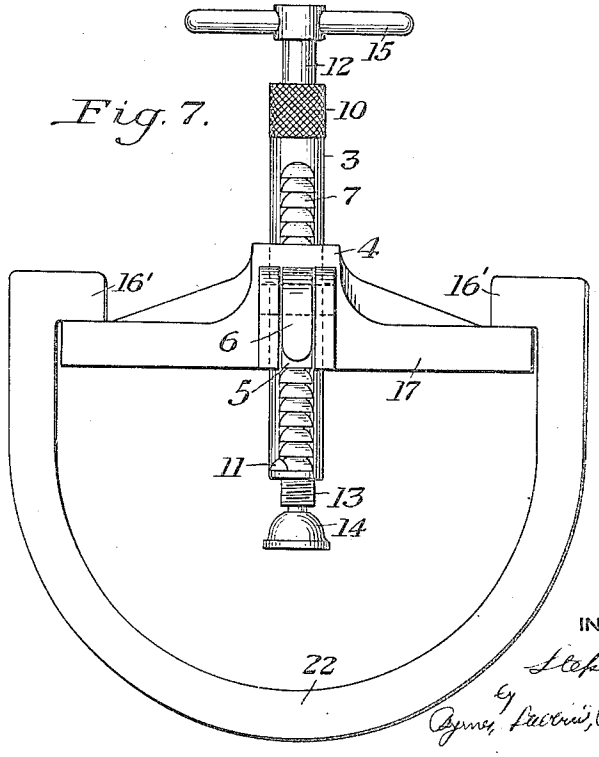

INVENTOR

Stephen Moltrup,

by Byrnes, Stettin, Burgess & Purnell,

his attys.

Patented Feb. 13, 1923. 1,445,344

UNITED STATES PATENT OFFICE

STEPHEN MOLTRUP, OF BEAVER FALLS, PENNSYLVANIA.

TOOL.

Application filed May 5, 1922. Serial No. 558,695.

To all whom it may concern:

Be it known that I, STEPHEN MOLTRUP, a citizen of the United States, residing at Beaver Falls, in the county of Beaver and State of Pennsylvania, have invented a new and useful Improvement in Tools, of which the following is a full, clear, and exact description.

The present invention relates to tools such as vises and clamps, adapted for clamping or holding pieces of material in position.

It has heretofore been proposed to construct quick acting tools of this nature having quickly releasable means permitting rapid adjustment of the parts. For this purpose, interrupted threads of the general character utilized on breech blocks have been used, but they have not been altogether satisfactory, due to the inaccurate positioning of the relative portions of the threads at different times. It has also been proposed, as shown, for example, in the patent to Davis No. 286,688, of October 16, 1883, to use a ratchet arrangement permitting free relative movement of the parts when the retaining pawl is manually released. This type of clamp has not come into accepted use due to the objection to the use of a separate member requiring independent manual operation. The same remarks apply to a construction such as disclosed in the Basinger Patent No. 359,833, although both of these clamps are effective for performing the desired clamping operations.

By the present invention I provide an improved construction in which the adjustment may be rapidly and easily accomplished without the objectionable features referred to.

In the drawings there is illustrated a preferred form of the present invention, but it will be apparent that changes may be made in the construction and operation as therein illustrated, without departing from the spirit of the invention, or the scope of my broader claims.

In the drawings,—

Figure 1 is a side elevation illustrating a clamp embodying the present invention;

Figure 2 is a partial sectional view through the construction illustrated in Figure 1;

Figure 3 is a sectional view, partly broken away, on the line III—III of Figure 1;

Figure 4 is a view, similar to Figure 3, illustrating the parts in a different operative position;

Figure 5 is a detail view illustrating the construction of one of the movable members; and

Figures 6 and 7 are side elevations of modified forms of my invention.

In carrying out the present invention, there are preferably provided relatively movable members 2 and 3, the member 2 having a circular bearing 4 through which the member 3 is adapted to rotatably and longitudinally move. The member 2 also carries, above the bearing 4, a pawl 5 which may be held in cooperative relation to the bearing by means of a spring 6.

The clamping member 3 preferably comprises a sleeve having formed on the outer surface thereof a plurality of ratchet teeth 7 presenting shoulders for cooperation with the pawl 5, of such construction that the sleeve may be readily moved into clamping position, while movement in a direction such as would produce extension of the members is prevented. Also formed in the outer surface of the sleeve, and extending substantially the entire length thereof, is a slot 8 adapted to receive a pin 9 extending through the member 2 into the bearing 4. This pin limits the rotational movement which may be imparted to the member 3. The teeth 7 are so formed that upon rotating the member 3, by grasping the knurled portion 10, it may be rotated from the position illustrated in Figures 1 and 3 to the position illustrated in Figure 4. In this position, the pawl 5 will be disengaged from the teeth 7, thereby permitting the member 3 to be easily moved in either direction. For preventing complete withdrawal of the member 3, there is formed adjacent the end thereof a supplemental shoulder 11 adapted to be engaged by the pawl 5. When the desired relative position of the parts has been obtained by the adjustment provided, the member 3 is again rotated into the position illustrated in Figure 1, thereby providing an approximate adjustment for clamping material M between the clamping members. The final clamping operation is then obtained by means of a plunger 12 extending through the sleeve of the member 3 and having a threaded engagement 13 throughout a portion of its length therewith. At the end of the plunger 12 may be provided

the usual adjustable head 14 permitting such adjustment as required by the contour of the material being clamped.

By the construction herein provided, it will be apparent that the clamping members may be quickly and easily relatively adjusted without removing the hand from the operating handle 15 on the plunger 12, it being merely necessary to engage the knurled portion 10 by extending the fingers. This eliminates entirely the necessity of providing a separate manually releasable retaining member, thereby admirably adapting the tool to miscellaneous clamping purposes.

In Figures 6 and 7 are illustrated modified forms of tools in which the movable members 3 are similar to that already described, and the corresponding parts, together with the pawl are, for sake of brevity, designated by the same reference characters as those before used. In the construction of Figure 6, the member 2′ has inwardly projecting supporting and gripping shoulders 16 adapted to support the article being clamped, which in such cases may be tire casings or the like. In Figure 7 the clamping member 22, which is adapted to receive the article or material therein, is formed with shoulders 16′ adapted to be engaged by a yoke 17 carrying the member 3 and the pawl 5.

With all of the forms of my invention herein illustrated and representing the adaptability of my invention to different specific embodiments, there are provided the quickly releasable operating features. This means for operating the members to produce relative adjustment therebetween constitutes an important advantage of the present invention.

I claim:

1. In a clamping tool, relatively movable clamping members, one of said members having a bearing through which the other member is rotatably and longitudinally movable, a spring pressed pawl cooperating with said bearing, the other of said members having a plurality of teeth thereon adapted to be engaged by said pawl to prevent relative longitudinal movement between said members effective for extending the same, said teeth and pawl being disengageable by relative rotatable movement between said members, means for limiting such rotatable movement, and a plunger having a threaded adjustment in the member extending through said bearing, substantially as described.

2. In a clamping tool, relatively movable clamping members, one of said members having a bearing through which the other member is rotatably and longitudinally movable, a spring pressed pawl cooperating with said bearing, the other of said members having a plurality of teeth thereon adapted to be engaged by said pawl to prevent relative longitudinal movement between said members effective for extending the same, said teeth and pawl being disengageable by relative rotatable movement between said members, and a plunger having a threaded adjustment in the member extending through said bearing, substantially as described.

3. In a clamping tool, relatively movable clamping members, one of said members having a bearing through which the other member is rotatably and longitudinally movable, a spring pressed pawl cooperating with said bearing, the other of said members having a plurality of teeth thereon adapted to move freely under said pawl in one direction but preventing movement in the opposite direction, said pawl being disengageable from said teeth by rotatably moving said member in said bearing, and a plunger having a threaded adjustment in said last mentioned member, substantially as described.

4. In a clamping tool, relatively movable clamping members, one of said members having a bearing through which the other member is rotatably and longitudinally movable, a pawl carried by one of said members, teeth formed on the other of said members and adapted to be engaged by said pawl, means for maintaining said pawl in engagement with said teeth, said pawl being disengageable from said teeth by relative rotatable movement between said members, means for limiting such rotatable movement, and a plunger having threaded engagement with one of said members for exerting a clamping operation on material operatively positioned between said members, substantially as described.

5. In a clamping tool, relatively movable clamping members, one of said members having a bearing through which the other member is rotatably and longitudinally movable, a pawl carried by one of said members, teeth formed on the other of said members and adapted to be engaged by said pawl, means for maintaining said pawl in engagement with said teeth, said pawl being disengageable from said teeth by relative rotatable movement between said members, and a plunger having threaded engagement with one of said members for exerting a clamping operation on material operatively positioned between said members, substantially as described.

6. In a clamping tool, a member having a bearing formed therein, a second member longitudinally movable through said bearing and rotatably mounted therein, and a pawl and ratchet connection between said members, said connection being disengageable by a relative rotational movement between said members, substantially as described.

7. In a clamping tool, a member having a bearing formed therein, a second member

longitudinally movable through said bearing and rotatably mounted therein, a pawl and ratchet connection between said members, said connection being disengageable by a relative rotational movement between said members, and means for limiting the relative rotational movement between said members, substantially as described.

8. In a clamping tool, a member having a bearing formed therein, a second member longitudinally movable through said bearing and rotatably mounted therein, a pawl and ratchet connection between said members, said connection being disengageable by a relative rotational movement between said members, and means for preventing the accidental separation of said members, substantially as described.

9. In a clamping tool, a member having a bearing formed therein, a pawl carried by said member in cooperative relation with said bearing, a second member longitudinally and rotatably movable in said bearing, said second member having a plurality of teeth formed thereon adapted to be engaged by said pawl to prevent movement of the second member in one direction when said pawl is in operative engagement with one of said teeth, said pawl being disengageable from said teeth by a relative rotational movement between said members, a knurled portion on said second member facilitating such rotational movement, means for limiting the extent of said rotatable movement, and a plunger having a threaded adjustment with said second member, substantially as described.

In testimony whereof I have hereunto set my hand.

STEPHEN MOLTRUP.