(19) Europäisches Patentamt
European Patent Office
Office européen des brevets

(11) **EP 2 679 743 B1**

(12) **EUROPEAN PATENT SPECIFICATION**

(45) Date of publication and mention of the grant of the patent:
22.11.2017 Bulletin 2017/47

(21) Application number: **12173863.7**

(22) Date of filing: **27.06.2012**

(51) Int Cl.:
E04F 19/04 *(2006.01)* ***G08B 17/10*** *(2006.01)*
G08B 21/10 *(2006.01)* ***G08B 21/12*** *(2006.01)*
F21V 23/04 *(2006.01)* ***H05B 37/02*** *(2006.01)*
F21V 33/00 *(2006.01)*

(54) **Skirting board**

Sockelleiste

Plinthe

(84) Designated Contracting States:
AL AT BE BG CH CY CZ DE DK EE ES FI FR GB GR HR HU IE IS IT LI LT LU LV MC MK MT NL NO PL PT RO RS SE SI SK SM TR

(43) Date of publication of application:
01.01.2014 Bulletin 2014/01

(73) Proprietor: **Tarkett GDL**
9779 Lentzweiler (LU)

(72) Inventor: **Viale, Sébastien**
6600 Bastogne (BE)

(74) Representative: **Pronovem**
Pronovem Luxembourg
12, avenue du Rock n' Roll
BP 327
4004 Esch sur Alzette (LU)

(56) References cited:
WO-A2-2008/093261
BE-A7- 1 012 718
GB-A- 2 455 723
US-B1- 7 142 123

Note: Within nine months of the publication of the mention of the grant of the European patent in the European Patent Bulletin, any person may give notice to the European Patent Office of opposition to that patent, in accordance with the Implementing Regulations. Notice of opposition shall not be deemed to have been filed until the opposition fee has been paid. (Art. 99(1) European Patent Convention).

EP 2 679 743 B1

Printed by Jouve, 75001 PARIS (FR)

Description

Field of the invention

[0001] The present invention relates to a skirting board, or wall base, comprising event detection means.

Prior art and related technical background

[0002] A skirting board, also known as a baseboard, wall molding or a wall base, is generally a board covering the lowest part and/or the upper part of a wall, usually covering the joint between the wall surface and the floor and/or ceiling.

[0003] A skirting board generally covers the uneven edge of flooring next to the wall. It has an aesthetical purpose serving as a decorative molding, but installed between the wall surface and the floor it protects also the wall from kicks, abrasion, and furniture.

[0004] A skirting board is generally made of wood or plastic, and is nailed, screwed or glued to the wall.

[0005] Skirting boards are usually simple panels having only aesthetical and wall protection purposes. However, the closest prior arts US 7142123 discloses a sensor system, e.g. configured as a baseboard or crown moulding, for detecting and determining the severity of moisture in building materials, such as wood, drywall, plaster, etc. Document GB 2455723 relates to floor illumination, e.g. in a skirting board, which is automatically activated when needed. WO 2008/093261 discloses an apparatus, with a carrier element and a holding means, which can be a baseboard, having an optical fiber embedded in the carrier element.

Aims of the invention

[0006] The present invention aims to provide a skirting board which does not have the drawbacks of the prior art.

[0007] The present invention aims to provide a multifunction skirting board which is an alternative to traditional skirting boards.

[0008] The invention aims to provide a multifunction skirting incorporating detection means, power supply and communication means.

[0009] The present invention aims to provide a solution to cabling and cable connections issues.

Summary of the invention

[0010] The present invention discloses a skirting board according to claim 1.

[0011] According to particular embodiments, the skirting board may comprise one, or a suitable combination of one or several, of the following characteristics:

- the event detection means comprises an ultrasonic detector, a passive infrared detector or a combination thereof,
- the event detection means comprises a gas detector, a multiple gas detector, a smoke detector, a liquid detector, an audio detector or a combination thereof,
- the communication means comprise means to produce audible and/or visual alarms,
- the skirting board comprises data storage means,
- the skirting board comprises coupling means enable to couple adjacent skirting boards and/or means to fix said skirting board to the wall and/or to the floor or ceiling.

[0012] The present invention discloses also the use of the skirting board according to the invention to detect traffic, a fall, a liquid leakage, moisture release, gas release, smoke release, fragrance release, nuclear, chemical or biological (NBC) release, movement or sound into a wall, a floor and/or a ceiling

[0013] The present invention discloses also a skirting system comprising at least one skirting board according to the invention.

[0014] The present invention discloses also the use of the skirting system according to the invention to cover the lowest and/or the upper part of the wall of a construction.

Brief description of the drawings

[0015]

Figure 1 represents schematically the front face of the skirting board.

Figure 2 represents schematically the inside of the skirting board.

Detailed description of the invention

[0016] The present invention relates to a skirting board 1 able to detect at least one event, preferably a plurality of events of the same or different nature. The skirting board 1 is thus multifunctional.

[0017] The skirting board 1 comprises detection means 2, power supply means 3 and communication means 4. All the means are embedded in the skirting board body 5.

[0018] The detection means 2 comprise at least one detector preferably a plurality of detectors, able to detect any suitable event.

[0019] The detectable event may occur near the floor, the wall, the ceiling and/or within the space covered by the detector or detectors, but also on the surface or within the floor, the wall and/or the ceiling.

[0020] As for example, the event detectable can be a traffic, a fall, a vibration, a light, lights, a liquid leakage, moisture release, gas release, smoke release, fragrance release, nuclear, chemical or biological (NBC) release, movement or sound into the wall, the floor and/or the ceiling.

[0021] The event can be an horizontal and/or vertical

movement of a body of an object, an animal or a person, for example a person which is moving or falling in the space covered by the detector, or detectors, embedded in the skirting board.

[0022] The event can be the leakage of water or oil for example, onto or from the wall, the ceiling and/or the floor.

[0023] The event can be the release of moisture coming from the wall, the floor and/or the ceiling.

[0024] The event can be the release of at least one gas coming from the wall, the floor and/or the ceiling. The gas may be for example butane or propane, carbon dioxide, carbon monoxide and/or exhaust fumes.

[0025] The event can be the release of smoke from the combustion, or pyrolysis, of a material, for example of a furniture during a fire.

[0026] The event can be the release of nuclear, chemical and/or biological particles or components. For example, the event may be the release of volatile organic compounds (VOCs) from PVC floorings.

[0027] The event can be the movement or sound coming from the wall, the floor and/or the ceiling, for example the sound produced by termites, rats or mice.

[0028] In a preferred embodiment, the detector may be for example an ultrasonic detector, a passive infrared detector or a combination thereof.

[0029] In a preferred embodiment, the detector may be for example a gas detector, a multiple gas detector, a smoke detector, a liquid detector, an audio detector or a combination thereof.

[0030] The power supply means 3 comprise a power supply coupled to the electric network of the place wherein the skirting board is installed. In this case, the skirting board 1 may also comprise the electric cables.

[0031] The power supply means 3 comprise autonomous power supply. The power supply means 3 comprise at least one photovoltaic cell 6, preferably a plurality of photovoltaic cells, and at least one battery, more preferably a plurality of batteries.

[0032] The communication means 4 are means to communicate that an event, or a plurality of events, detected by detection means, occurred. The communication means 4 may be either by wire or wireless.

[0033] In a preferred embodiment, the communication means 4 comprise means to produce an audible and/or visual alarm, preferably audible and visual alarms. The communication means 4 may comprise a speaker, or a plurality of speakers, to produce a sound or a plurality of sounds, music, and/or a light or lights, of a single colour or multiple colours, which may also be flashing.

[0034] The communication means 4 comprise wireless communication means.

[0035] The wireless communication means may comprise Wi-Fi means, RFID means, Bluetooth means, mobile phone means and/or access to internet means.

[0036] The wireless communication means may enable the skirting board to communicate to a computer.

[0037] In a preferred embodiment, the communication means 4 comprise wireless communication means in combination with means to produce audible and/or visual alarm.

[0038] The skirting board 1 further comprises data interpretation means 7 and may further comprise data storage means.

[0039] The data interpretation means 7 may comprise a central processing unit, memory means, for example, ROM or RAM.

[0040] The data interpretation means 7 interpret the event, or plurality of events, detected by the detection means. For example, for an event "falling", it can discriminate between the fall of a person and a dog, a child or a bag, being simply laid on the floor.

[0041] The skirting board 1 further comprises cooling means.

[0042] The cooling means may be either air-conditioning means or means to cool the different means embedded within the skirting board.

[0043] The skirting board 1 may further comprise coupling means enable to couple adjacent skirting boards according to the invention and/or means to fix the skirting board to the wall and/or to the floor or ceiling.

[0044] The skirting board 1 according to the invention is made of wood or plastic, preferably, it is made of PVC or rubber.

[0045] The skirting board 1 according to the invention has any suitable shape and dimension.

[0046] The skirting board 1 according to the invention present the advantage of being easy to install discreetly and fully integrated in the wall.

[0047] The skirting system comprises at least one skirting board 1 according to the invention, preferably a plurality of skirting boards 1 according to the invention. In this last embodiment the skirting system may comprises at least one skirting board, preferably a plurality of skirting boards being simple boards, or panels, not multifunctional boards, for example made of wood or plastic, without any electronic embedded therein. However, the skirting system may also comprise a board which is not multifunctional but comprises the electric cables from the power supply means.

[0048] The skirting system may be used to cover the lowest and/or the upper part of a wall.

[0049] In a preferred embodiment, the wall comprising the skirting system according to the invention is an inside wall of a construction, preferably a building.

[0050] In another preferred embodiment, the wall comprising the skirting system according to the invention is an outside wall of a construction, preferably a building.

Claims

1. A skirting board (1) for covering the joint between the wall surface and the floor and/or ceiling, said skirting board (1) comprising, embedded in the skirting board body, event detection means (2), power supply means (3), communication means (4) data

interpretation means (7) and cooling means, said power supply means being autonomous and comprising at least one photovoltaic cell (6) and at least one battery, said communication means being WiFi and/or Bluetooth means, said data interpretation means (7) comprising a central processing unit for interpreting events detected by the event detection means (2).

2. The skirting board (1) according to claim 1, wherein the event detection means (2) comprises an ultrasonic detector, a passive infrared detector or a combination thereof.

3. The skirting board according to any of the preceding claims, wherein the event detection means comprises a gas detector, a multiple gas detector, a smoke detector, a liquid detector, an audio detector or a combination thereof.

4. The skirting board (1) according to any of the preceding claims, wherein the communication means (4) comprise means to produce audible and/or visual alarms.

5. The skirting board (1) according to any of the preceding claims, comprising data storage means.

6. The skirting board (1) according to any of the preceding claims, comprising coupling means able to couple adjacent skirting boards and/or means to fix said skirting board to the wall and/or to the floor or ceiling.

7. Use of the skirting board (1) according to any of the claims 1 to 6, to detect traffic, a fall, a vibration, a light, lights, a liquid leakage, moisture release, gas release, smoke release, fragrance release, nuclear, chemical or biological (NBC) release, movement or sound into a wall, a floor and/or a ceiling.

8. A skirting system comprising at least one skirting board (1) according to the claims 1 to 6.

9. Use of the skirting system according to claim 8 to cover the lowest and/or the upper part of the wall of a construction.

Patentansprüche

1. Sockelleiste (1) zum Abdecken der Verbindung zwischen der Wandfläche und dem Boden und/oder der Decke, wobei die Sockelleiste (1), eingebettet in dem Sockelleistenkörper, Ereigniserfassungsmittel (2), Stromversorgungsmittel (3), Kommunikationsmittel (4), Datenauswertungsmittel (7) und Kühlmittel aufweist, wobei die Stromversorgungsmittel autonom sind und mindestens eine Photovoltaikzelle (6) und mindestens eine Batterie aufweisen, wobei die Kommunikationsmittel WLAN- und/oder Bluetoothmittel sind, wobei die Datenauswertungsmittel (7) eine zentrale Verarbeitungseinheit zum Auswerten von Ereignissen aufweisen, die durch die Ereigniserfassungsmittel (2) erfasst werden.

2. Sockelleiste (1) nach Anspruch 1, wobei das Ereigniserfassungsmittel (2) einen Ultraschalldetektor, einen passiven Infrarotdetektor oder eine Kombination davon aufweist.

3. Sockelleiste nach einem der vorhergehenden Ansprüche, wobei das Ereigniserfassungsmittel einen Gasdetektor, einen Mehrfachgasdetektor, einen Rauchdetektor, einen Flüssigkeitsdetektor, einen Audiodetektor oder eine Kombination davon aufweist.

4. Sockelleiste (1) nach einem der vorhergehenden Ansprüche, wobei die Kommunikationsmittel (4) Mittel aufweisen, um akustische und/oder visuelle Alarme zu produzieren.

5. Sockelleiste (1) nach einem der vorhergehenden Ansprüche, die Datenspeichermittel aufweist.

6. Sockelleiste (1) nach einem der vorhergehenden Ansprüche, die Kopplungsmittel aufweist, die imstande sind, benachbarte Sockelleisten und/oder Mittel zu koppeln, um die Sockelleiste an der Wand und/oder dem Boden oder der Decke zu befestigen.

7. Verwendung der Sockelleiste (1) nach einem der Ansprüche 1 bis 6, um Verkehr, einen Sturz, eine Schwingung, ein Licht, Lichter, ein Flüssigkeitsaustreten, eine Feuchtigkeitsfreigabe, Gasfreigabe, Rauchfreigabe, Duftstofffreigabe, nukleare, chemische oder biologische (NBC) Freigabe, Bewegungen oder Geräusche in eine Wand, einen Boden und/oder eine Decke zu erfassen.

8. Sockelsystem, das mindestens eine Sockelleiste (1) nach den Ansprüchen 1 bis 6 aufweist.

9. Verwendung des Sockelsystems nach Anspruch 8, um den untersten und/oder den oberen Teil der Wand einer Konstruktion abzudecken.

Revendications

1. Plinthe (1) pour couvrir le joint entre la surface murale et le plancher et/ou plafond, ladite plinthe (1) comprenant, encastrés dans le corps de plinthe, des moyens de détection d'événement (2), des moyens d'alimentation électrique (3), des moyens de com-

munication (4), des moyens d'interprétation de données (7) et des moyens de refroidissement, lesdits moyens d'alimentation électrique étant autonomes et comprenant au moins une cellule photovoltaïque (6) et au moins une batterie, lesdits moyens de communication étant des moyens WiFi et/ou Bluetooth, lesdits moyens d'interprétation de données (7) comprenant une unité centrale de traitement pour interpréter des événements détectés par les moyens de détection d'événement (2).

2. Plinthe (1) selon la revendication 1, dans laquelle les moyens de détection d'événement (2) comprennent un détecteur ultrasonique, un détecteur infrarouge passif ou une association de ceux-ci.

3. Plinthe selon l'une quelconque des revendications précédentes, dans laquelle les moyens de détection d'événement comprennent un détecteur de gaz, un détecteur de gaz multiples, un détecteur de fumée, un détecteur de liquide, un détecteur audio ou une association de ceux-ci.

4. Plinthe (1) selon l'une quelconque des revendications précédentes, dans laquelle les moyens de communication (4) comprennent des moyens pour produire des alarmes audibles et/ou visuelles.

5. Plinthe (1) selon l'une quelconque des revendications précédentes, comprenant des moyens de stockage de données.

6. Plinthe (1) selon l'une quelconque des revendications précédentes, comprenant des moyens de couplage capables de coupler des plinthes adjacentes et/ou des moyens pour fixer ladite plinthe au mur et/ou au plancher ou plafond.

7. Utilisation de la plinthe (1) selon l'une quelconque des revendications 1 à 6, pour détecter un trafic, une chute, une vibration, une lumière, des lumières, des fuites de liquide, un dégagement d'humidité, un dégagement de gaz, un dégagement de fumée, une libération de parfum, une libération nucléaire, chimique ou biologique (NBC), un mouvement ou un son dans un mur, un plancher et/ou un plafond.

8. Système de plinthe comprenant au moins une plinthe (1) selon les revendications 1 à 6.

9. Utilisation du système de plinthe selon la revendication 8 pour couvrir la partie la plus basse et/ou la partie plus élevée du mur d'une construction.

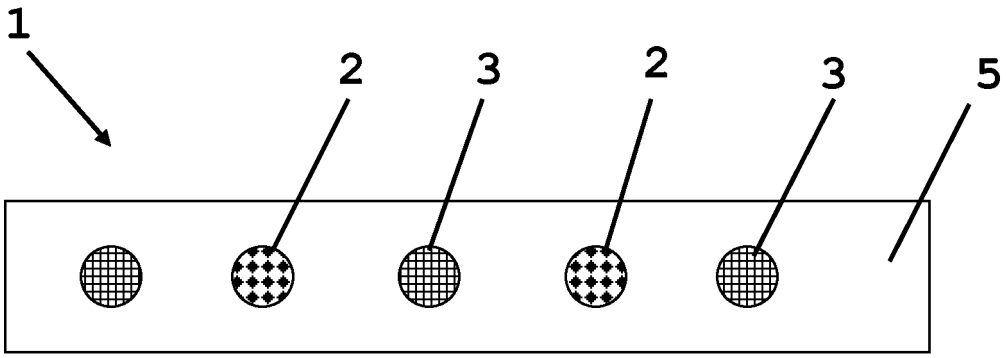

Fig. 1

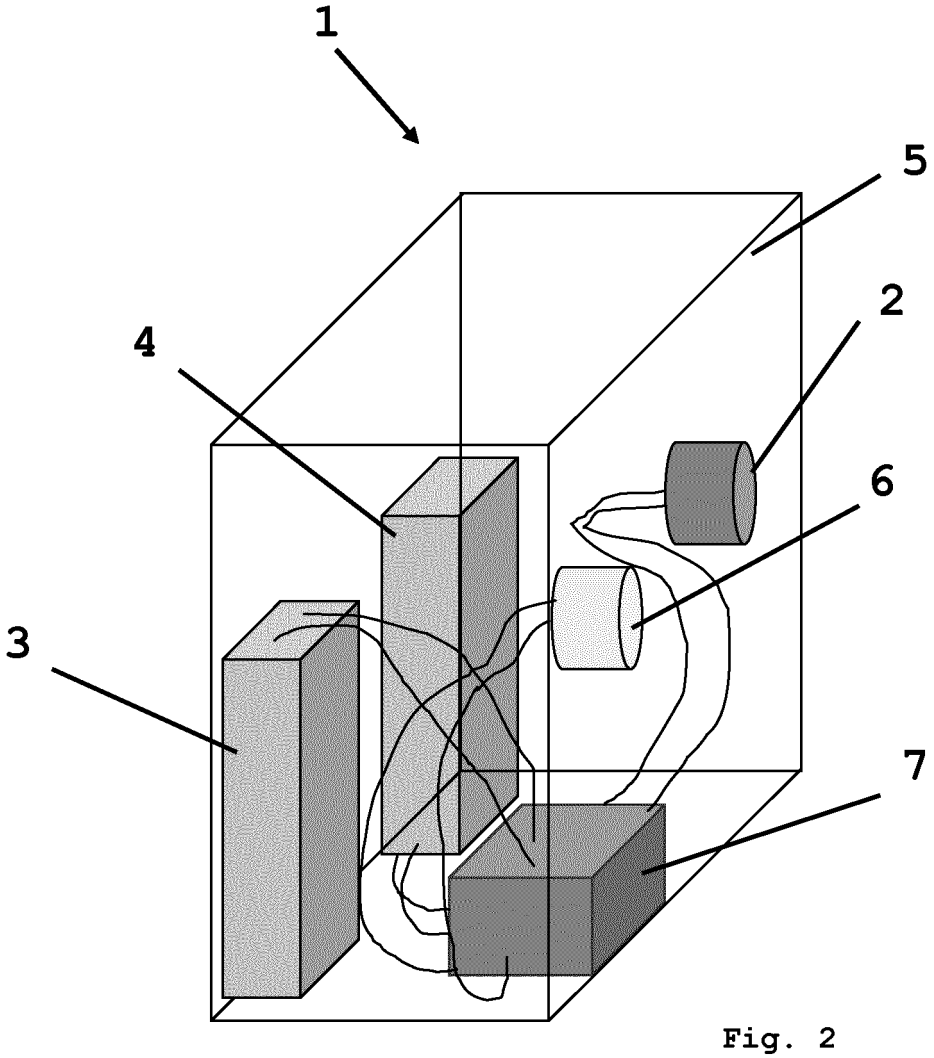

Fig. 2

REFERENCES CITED IN THE DESCRIPTION

This list of references cited by the applicant is for the reader's convenience only. It does not form part of the European patent document. Even though great care has been taken in compiling the references, errors or omissions cannot be excluded and the EPO disclaims all liability in this regard.

Patent documents cited in the description

- US 7142123 B **[0005]**
- GB 2455723 A **[0005]**
- WO 2008093261 A **[0005]**