May 21, 1957 H. ALTOSAAR 2,792,700

APPARATUS FOR THE CONTINUOUS TREATMENT OF TEXTILE MATERIALS

Filed Dec. 8, 1952 3 Sheets-Sheet 1

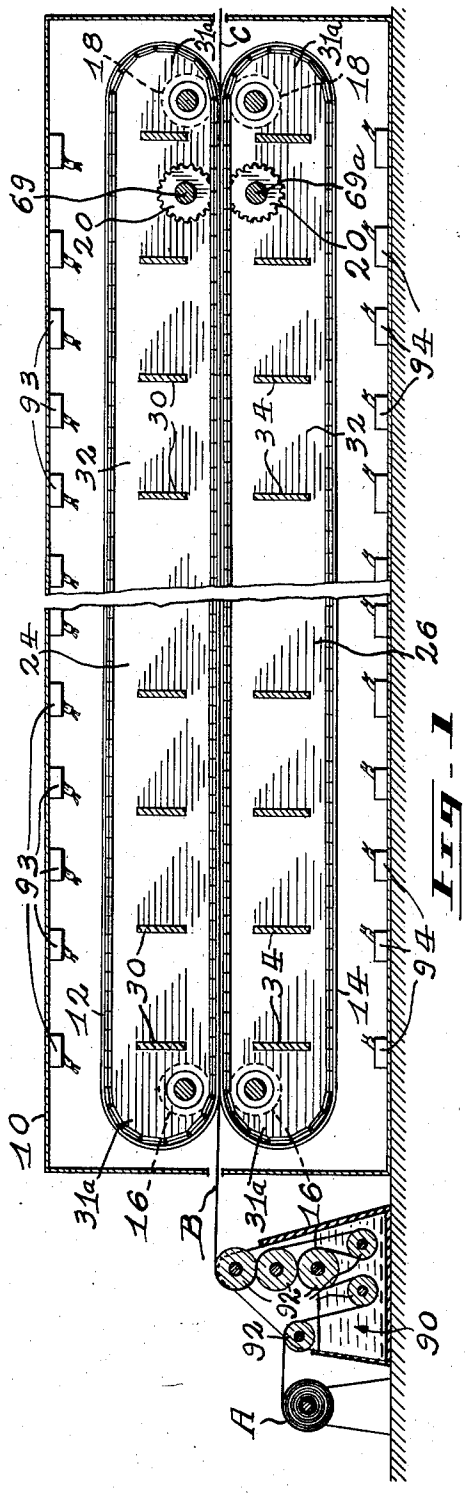

Fig - 1

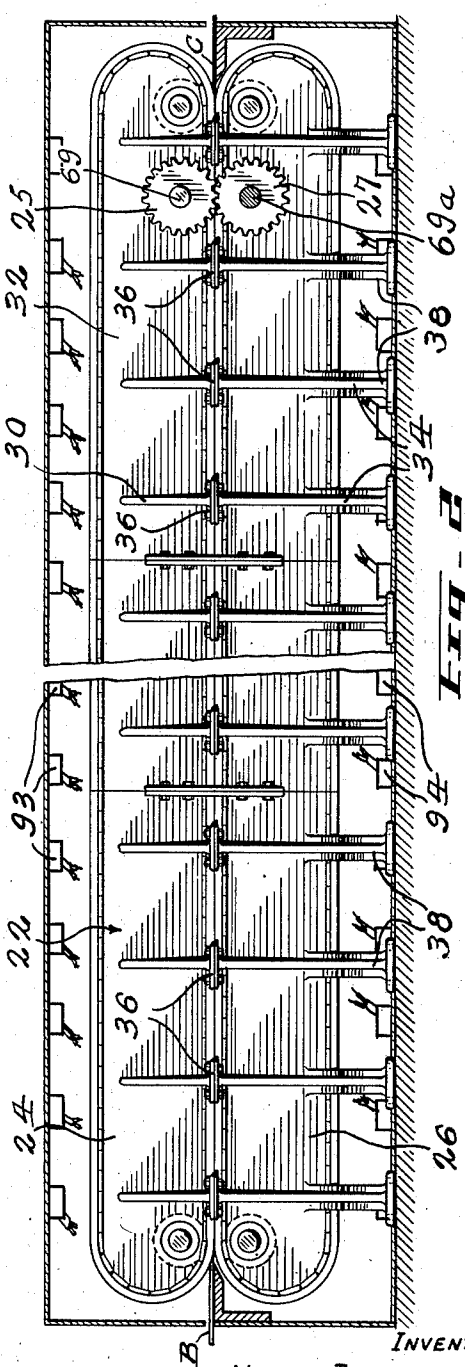

Fig - 2

INVENTOR
HEINO ALTOSAAR
By
ATTORNEY

May 21, 1957 H. ALTOSAAR 2,792,700

APPARATUS FOR THE CONTINUOUS TREATMENT OF TEXTILE MATERIALS

Filed Dec. 8, 1952 3 Sheets-Sheet 2

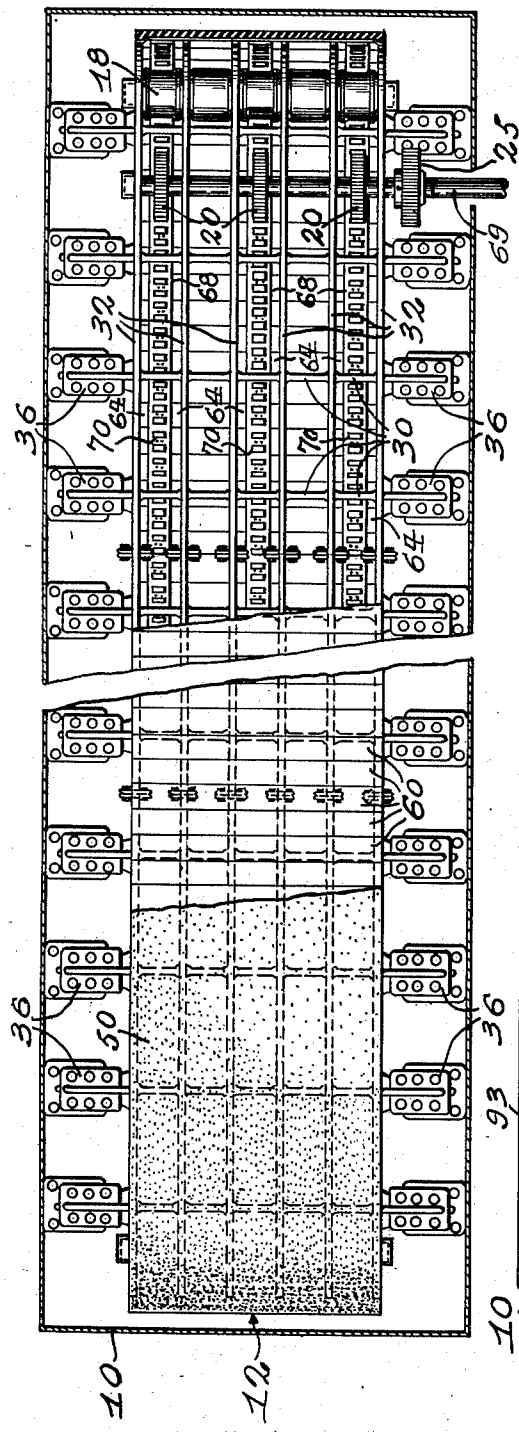

Fig. 3

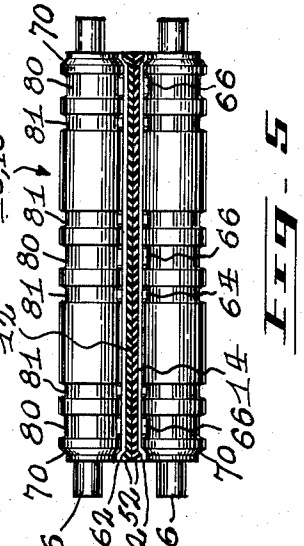

Fig. 5

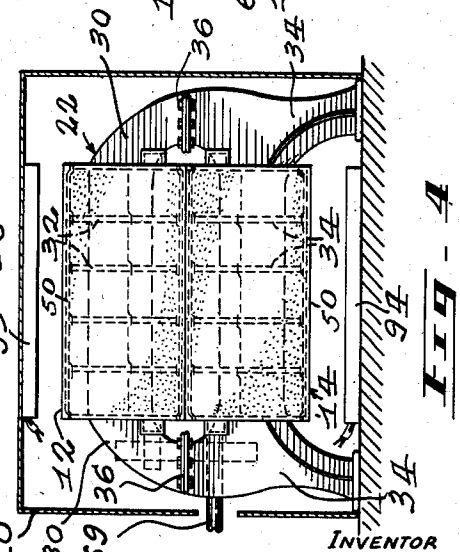

Fig. 4

INVENTOR
HEINO ALTOSAAR
By
ATTORNEY

May 21, 1957 H. ALTOSAAR 2,792,700

APPARATUS FOR THE CONTINUOUS TREATMENT OF TEXTILE MATERIALS

Filed Dec. 8, 1952 3 Sheets-Sheet 3

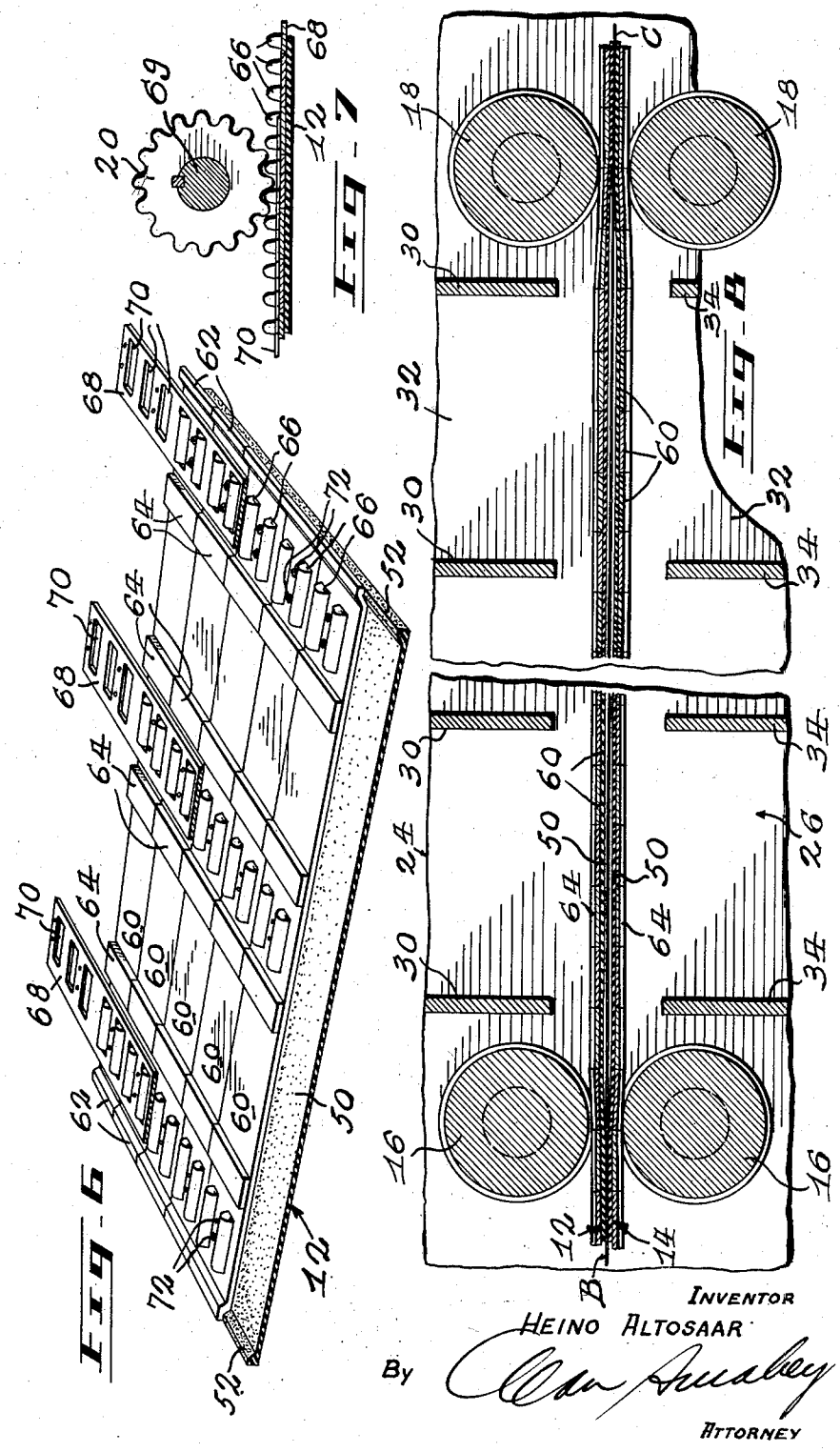

United States Patent Office 2,792,700 Patented May 21, 1957

2,792,700

APPARATUS FOR THE CONTINUOUS TREATMENT OF TEXTILE MATERIALS

Heino Altosaar, Magog, Quebec, Canada, assignor to Dominion Textile Company Limited, Montreal, Quebec, Canada, a corporation of Canada

Application December 8, 1952, Serial No. 324,809

17 Claims. (Cl. 68—5)

The present invention relates to apparatus for the treating of textile materials and other sheet materials and particularly to apparatus of this nature where materials are subjected to both heat and pressure during the finishing operations.

The present invention aims to provide a means of finishing textile and/or other sheet materials that is continuous so that material can be unrolled from a first storage roll, subjected to the finishing operation and re-rolled in finished condition in a continuous cycle. The invention provides a preferred apparatus by means of which this operation may be carried out.

Accordingly, the invention is a continuous finishing apparatus which is characterized by providing means whereby the treatment is accomplished by passing one end of a roll of material to be finished through a bath containing a finishing fluid; passing the wet material between opposed moving surfaces while the material is subjected to heat sufficient to vaporize at least portion of the finishing fluid carried on the material and confining the resultant gases arising from the material between the opposed moving surfaces so as to create a high pressure area therebetween and re-rolling the finished material.

More specifically, the apparatus consists essentially of a pair of elongated opposed endless belts made from a flexible heat-resistant material, for example, silicone rubber, which are mounted on and are driven between spaced apart support rollers. The marginal edges of the endless belts are provided with sealing means co-operating with confining means provided on a supporting frame. The belt supporting rollers are journalled and formed so as to effectively seal the entry and exit ends of the opposed belts across the width of the belts. With this arrangement, the effective run of the belt is sealed along both side marginal edges of the belts and at the ends so that in effect a sealed pressure chamber is provided between the opposed moving faces of the belts. The material which is to be finished is inserted between the belts and thus may be continuously fed through a sealed pressure chamber. Suitable heating means are provided to heat the belts and heating means and belts are surrounded by an outer shell or housing to prevent loss of heat.

In operation, the material is first impregnated with a finishing agent, for example, in the case of bleaching, a sodium chloride solution, and is then passed between the first set of supporting rollers at the entry end of the opposed belts so that it is carried by the moving belt surfaces into the pressure chamber provided between the sealed edges of the belts. When heat is applied to the belt, through suitable means, for example, electric elements, the forming of gases from wet impregnated material creates a pressure chamber between the moving opposed belt surfaces.

In the preferred construction, the supporting frame on which the rollers and belts are mounted is constructed so as to include two frame sections each having a series of spaced apart longitudinally extending webs or guide plates over which each of the belts travel between the supporting

rollers. The frame webs extend the length of the machine so that the entire run of the belts are supported. These longitudinal webs are connected to and are supported by spaced apart outside frame members which are constructed so as to be in two sections which, when connected together in alignment with the effective run of the belts constitute the complete supporting frame.

The present frame construction with the combined upper and lower portions each having the longitudinal guiding webs and the transverse supporting webs give the entire frame sufficient strength to withstand any pressure that may be created in the sealed chamber provided between the opposed faces of the belts.

Detailed description

Having thus generally described the nature of the invention, particular reference will be made to the accompanying drawings wherein there is shown by way of illustration a preferred embodiment of an apparatus by means of which the present process may be carried out, and in which:

Figure 1 is a diagrammatic view in side elevation and partially in section of a continuous finishing apparatus constructed in accordance with the invention.

Figure 2 is a side elevation of the finishing apparatus shown in Figure 1 with the outside housing shown in section.

Figure 3 is a view in plan of the construction shown in Figure 2 with the top portion of the housing and a portion of the top endless belt removed to show details of the internal construction more clearly.

Figure 4 is an end view of the construction shown in Figure 3.

Figure 5 is an enlarged diagrammatic view showing in more detail the formation of the belt supporting and sealing rollers and the relative position of the opposed belts adjacent their nip at one end of the apparatus.

Figure 6 is an enlarged diagrammatic view of a portion of one of the opposed belts showing in more detail the construction and relative position of the belt, the driving plates, the rubbing and guiding plates, and the driving plate connecting straps.

Figure 7 is an enlarged diagrammatic view partially in section showing the engagement of the driving sprockets with the upper portion of the driving teeth as they would appear when protruding through the plate connecting straps and being in meshed engagement with the driving sprocket.

Figure 8 is an enlarged diagrammatic view in section of the effective portion of the opposed belts and the end sealing and supporting rollers as they would appear when a portion of wet impregnated fabric is sealed within the centre portion and has been subjected to external heat whereby the impregnating fluid is creating gases causing pressure and expansion of the centre portions of the belts forming the pressure chamber.

With particular reference to Figure 1 of the drawings, the apparatus consists essentially of an outside housing **10** which serves as a covering and shield for the main working elements of the apparatus. These main elements comprise a pair of opposed belts **12** and **14** which are mounted between spaced apart supporting and sealing rollers **16** and **18** and are driven by driving sprockets **20** as will be described in more detail later.

The belts, supporting rollers and driving sprockets are mounted on and are supported by a frame **22** which is made up of a plurality of interconnected upper and lower sections **24** and **26**. The frame sections **24** and **26** are both provided with a series of spaced apart longitudinal belt supporting and guiding webs or plates **32** which are supported by and maintained in spaced apart relationship through their connection to transverse supporting webs

30 and 34 respectively. The supporting webs 30, 34 extend outwardly at each side of the frame and are provided with mating flange plates 36 which are secured together by suitable bolts uniting the upper and lower halves of the frame.

The lower transverse supporting webs 34 are formed on their lower portions so as to provide pedestals or feet 38 by means of which the apparatus is secured in position to a suitable foundation. The longitudinal plates 32 on the upper 24 and lower portions 26 of the frame are aligned so as to extend the length of the machine in parallel alignment. The frame portions at each end of the machine include longitudinal plates which are rounded at the ends as indicated at 31*a* to provide a support for the opposed belts at the end of the run.

As it will be appreciated, since the length of the apparatus illustrated may be anywhere from 20 yards to 300 yards, the amount of frame sections will vary accordingly. However, irrespective of the length of the apparatus, the individual sections will be similar and any difference in length accomplished by the addition of additional sections.

The supporting rollers 16, 18 between which the opposed belt surfaces travel are journalled between the longitudinal frame members 32 adjacent each end of the machine. The endless belts 12 and 14 each include a main centre section 50 which is bordered along the marginal edges by outstanding beads 52. The material from which the belts are made must be flexible and heat resistant, for example, silicone rubber.

With particular reference to Figure 6 which shows an enlarged portion of the upper belt 12, the belts are supported and driven by means of the following arrangement; a plurality of elongated metal plates 60 are placed in juxtaposed relationship along the entire length of the belt. Each of the plates 60 is formed so as to have end portions 62 conforming to and being adapted to bear against the outstanding beads 52 of the belt. Rubbing and guiding plates 64 are provided on each of the plates 60 in spaced apart relationship corresponding to the spacing of the longitudinal webs 32 of the supporting frame. Driving teeth 66 are also mounted on each of the plates 60 in spaced apart relationship adjacent each end and in the centre of the plates.

In order that the plates 60 may be interconnected, endless flexible metal straps 68 are provided which include a series of spaced apart openings 70 wherein the teeth 66 of the plates 60 slidably fit. The endless straps 68 thus unite the plates 60 with the portions of the teeth 66 protruding beyond these plates engaging with and being driven by the driving sprockets 20. With this arrangement, frictional contact between the plates 60 and the belt surface 59 drive the endless belts in opposed relationship between the supporting rollers 16, 18.

The driving straps 68 are secured to the individual plates 60 by the provision of screws 72 passing through the plates and locking them together. As will be appreciated, when it is desired to remove any individual plate 60 either for maintenance or service, this may be accomplished by raising the connecting straps 68 so that the damaged or defective plate can be removed.

By this arrangement, when these belts, plates, and connecting straps are in assembled condition within the supporting frame, the teeth 66 on the plates 60 protrude through the openings 70 of the connecting belts 68 so that they are engaged by the driving sprockets 20. (See Figure 7.) Frictional contact between the outer surfaces of the interconnected individual plates 60 and the main portion 59 of each of the opposed belts transmits the driving movement from the plates 60 to the belts 50.

Each set of the driving sprockets 20 are mounted in spaced apart relationship corresponding to the disposition of the teeth 66 on the plates 60 along a common shaft 69 journalled between the longitudinal frame plates 32.

A corresponding set of sprocket gears 20 are journalled on a second shaft 69*a* extending across the lower portion of the supporting frame. The shaft on which the upper set of sprockets 20 are journalled extends beyond the frame member 32 at one side and a driven gear 25 is fixedly secured to the end of the shaft. The shaft 69*a* on which the lower set of sprockets 20 are mounted also extends beyond the frame member 32 at the same side and a driving gear 27 is secured to this shaft and is in meshed engagement with the driven gear 25. The lower shaft 69*a* is connected to a suitable outside power source so that rotation of the shaft and the driving gear 27 will cause a corresponding counter-rotation of the driven gear 25 and the upper set of sprockets 20. It will be understood that the apparatus shown in the present drawings is illustrative only, such an arrangement having a total length of approximately 20 yards, and if similar apparatus were to be constructed having a total length exceeding 20 yards, it would be necessary to provide supplementary sets of driving sprockets to ensure the smooth, even drive of the opposed belt surfaces. Such additional sprocket arrangements would be interconnected to a common main drive.

The supporting rollers 16 and 18 are formed, as shown in Figure 5, to provide clearance for the protruding elements mounted on the plates 60. The outer ends of the rollers are formed as indicated at 70 to correspond with the bead 62 provided on the ends of the plate and corresponding annular recesses 80 and 81 are provided between the roller ends to accommodate the driving teeth 66, the connecting plates 68 and the rubbing plates 64. The rubbing plates 64, when the plates 60 are combined by the connecting straps 68 serve a dual purpose. By engagement with the recesses 81 provided in the supporting rollers they aid in the maintenance of alignment of the opposed belts and by their contact with the outer peripheral edges of the frame members 32 provide a definite support to the displacement of the effective lengths of the belts when pressure is generated therebetween.

As is shown in detail in Figure 5, the effective portions of the belts between the rollers 16 and 18 at the entry and exit ends of the apparatus are effectively sealed across their width by the rollers 16, 18 while the pressure of the flanges 62 of the plates 60 against the outstanding beads 52 of the opposed belts also provides an effective seal along the outer marginal edges of the belts between the supporting rollers 16, 18. It will be understood that if the apparatus is of great length that suitable roller bearing means will be provided between the rubbing plates 64 and the frame members 32 so as to avoid excess friction drag on the opposed belts.

In accordance with the present arrangement material may be taken from a supply roll A, as is shown in Figure 1, and passed through an impregnating bath 90 over rollers 92 and fed through the housing 10 into the entry end "B" of the apparatus where it is carried by the opposed moving faces of the belts the length of apparatus to emerge at the exit end "C" at the other end of the housing 10. Within the housing 10 and above and below the opposing moving belts 12 and 14, there are provided electrical heater elements 93, 94 which heat both the surfaces of the belt and the surrounding atmosphere contained within the enclosure 10. As the impregnated material, which may be preheated by the impregnating fluid, passes between the rollers 16 and along the centre of the opposed belt surfaces towards the rollers 18, the heat to which the material is subjected causes gas to be generated and thus creates a pressure chamber between the sealed marginal edges and the sealed ends of the belts. The rigid structure of the supporting frame permits high pressure to be generated in this manner as the entire effective surface of the opposed belts is supported throughout its length by the longitudinal web members 32 of the frame.

Accordingly, with this apparatus a continuous finish-

ing treatment may be carried out by the steps of; passing one end of a roll of material to be finished through a bath or container containing a finishing fluid, placing the wet material between the opposed moving surfaces of the belts while the material is subjected to heat and confining the resulting gases arising from the material between the opposed moving surfaces so as to create a high pressure area therebetween and including as a final step if desired, the re-rolling of the finished material into condition for further operations.

It will be appreciated, the effective length of the apparatus and the amount of heat supplied thereto can be regulated to suit any desired finishing operations. It is contemplated, that if the apparatus were of sufficient length the material could not only be finished under pressure but would also be in a practically dry condition when delivered from between the opposed belt surfaces.

As an example, a continuous bleaching process may be carried out on textile materials by the present apparatus by first passing the material through a fluid solution of sodium chloride or hydrogen peroxide, then allowing the impregnated material to pass through the apparatus.

I claim:

1. An apparatus for continuously treating material under heat and pressure, comprising, a supporting frame, belt supporting rollers mounted on said frame adjacent each end, a pair of endless pressure confining belts mounted on said rollers one above the other with one surface of each belt in juxtaposed relationship with a corresponding surface on the other belt, belt drive members mounted between said supporting rollers and said endless belts, driving means in driving engagement with said belt drive means, a source of heat positioned adjacent said endless belts, and co-operating means on said belts, belt drive means and belt supporting rollers, whereby the marginal edges and transverse terminal ends of said juxtaposed belt surfaces are maintained in continuous sealing contact with each other during the effective travel of said belts along said frame so as to constitute a pressure chamber between said juxtaposed belt surfaces.

2. An apparatus as claimed in claim 1, wherein said supporting frame is surrounded by a housing, said housing having an entry port and an exit port in alignment with the respective terminal ends of said endless belts.

3. An apparatus as claimed in claim 1, wherein said endless belts are each formed so as to have a main flat portion and said co-operating means comprises outwardly extending beads at each side along the marginal side edges of said belts.

4. An apparatus as claimed in claim 1, wherein said belt drive members comprise a plurality of elongated plates disposed in juxtaposed relationship along the inner surface of each of said belts, each of said plates having spaced apart driving teeth projecting therefrom, and a flexible strap having openings corresponding to said teeth mounted over and interconnecting said plates about each belt to constitute an articulated endless drive belt corresponding to the inner surface of each of said opposed pressure confining belts with said plate teeth extending beyond the inner surface of said drive belt.

5. An apparatus as claimed in claim 4, wherein said driving means comprises a sprocket gear mounted for rotation on said frame and being in meshed engagement with the portion of the plate teeth extending outwardly from said drive belt.

6. An apparatus as claimed in claim 1, wherein said supporting rollers are mounted in opposed pairs adjacent each end of said supporting frame and the transverse terminal ends of said pressure confining belts are maintained in sealing contact between each pair of said supporting rollers, the surfaces of said rollers being shaped to correspond with the engaging surfaces of said belt drive members.

7. An apparatus for continuously treating material under heat and pressure, comprising, a housing, a supporting frame within said housing, belt supporting rollers mounted on said frame adjacent each end, a pair of endless pressure confining belts mounted on said rollers one above the other with one surface of each belt in juxtaposed relationship with a corresponding surface on the other belt, belt drive means mounted between said supporting rollers and said endless belts, driving means in driving engagement with said belt drive means, a source of heat positioned within said housing, and co-operating means on said belts, belt drive means and belt supporting rollers, whereby the marginal edges and transverse terminal end of said juxtaposed belt surfaces are maintained in continuous sealing contact with each other during the effective travel of said belts along said frame so as to constitute a pressure chamber between said juxtaposed belt surfaces.

8. An apparatus as claimed in claim 7, wherein said endless belts are each formed so as to have a main flat portion and said co-operating means comprises outwardly extending beads at each side of said main portion along the marginal side edges of said belts.

9. An apparatus as claimed in claim 7, wherein said belt drive means comprises, a plurality of elongated plates disposed in juxtaposed relationship along the inner surface of each of said belts, each of said plates having spaced apart driving teeth projecting therefrom, and a flexible strap having openings corresponding to said teeth mounted over and interconnecting said plates about each belt to constitute an articulated endless drive belt corresponding to the inner surface of said first named belt with said plate teeth extending beyond the inner surface of said drive belts.

10. An apparatus as claimed in claim 9, wherein said driving means comprises at least one sprocket gear mounted for rotation on said frame and being in meshed engagement with the portion of said plate teeth extending outwardly from said drive belt.

11. An apparatus as claimed in claim 7, wherein said supporting rollers are mounted in opposed pairs adjacent each end of said supporting frame and the transverse terminal ends of said belts are maintained in sealing contact between each pair of said supporting rollers, the surfaces of said rollers being shaped to correspond with the engaging surfaces of belt drive means.

12. An apparatus for continuously treating material under heat and pressure, comprising, a housing having an entry port and an exit port, an elongated supporting frame having upper and lower frame sections each provided with spaced apart longitudinally extending belt supporting webs interconnected by transverse supporting webs, the longitudinal surface of each of said frame upper section longitudinal webs being disposed in aligned spaced apart opposed relationship with a corresponding longitudinal surface on each of said frame lower section longitudinal webs, belt supporting rollers mounted on said frame adjacent each end, a pair of endless pressure confining belts mounted on said rollers one above the other with one surface of each belt in juxtaposed relationship with a corresponding surface on the other belt and between said opposed longitudinal web surfaces, belt drive members mounted between said supporting rollers and said endless belts, driving means in driving engagement with said belt drive members, a source of heat positioned within said housing adjacent said endless belts, and co-operating members on said belts, belt drive members and belt supporting rollers, whereby the marginal edges and transverse terminal ends of said juxtaposed belt surfaces are maintained in continuous sealing contact with each other during the effective travel of said belts along said frame so as to constitute a pressure chamber between said juxtaposed belt surfaces.

13. An apparatus as claimed in claim 12, wherein said frame upper and lower sections comprise two interconnected sections one above the other, with one of said pressure confining belts being mounted on the upper section and the other of said belts mounted on the lower section, the opposed surfaces of the longitudinally extending webs in each of said frame sections being disposed in juxtaposed relationship with said belt drive members.

14. An apparatus as claimed in claim 12, wherein said belt drive members comprise, a plurality of elongated plates disposed in juxtaposed relationship along the inner surface of each of said belts, each of said plates having spaced apart driving teeth projecting therefrom, and a flexible strap having openings corresponding to said teeth mounted over and interconnecting said plates about each belt to constitute an articulated endless drive belt corresponding to the inner surface of each of said pressure confining belts with said plate teeth extending beyond the inner surface of said drive belt.

15. An apparatus as claimed in claim 14, wherein said driving means comprises a sprocket gear mounted for rotation on said frame and being in meshed engagement with the portion of the plate teeth extending outwardly from said drive belt.

16. An apparatus as claimed in claim 14, wherein there are spaced apart rubbing plates mounted on each of said elongated plates, said rubbing plates being spaced apart on said elongated plates to align with said opposed elongated supporting web surfaces which extend longitudinally of said supporting frame.

17. An apparatus as claimed in claim 12, wherein said supporting rollers are mounted in opposed pairs adjacent each end of said supporting frame and the transverse terminal ends of said pressure confining belts are maintained in sealing contact between each pair of said supporting rollers, the surfaces of said rollers being shaped to correspond with the engaging surfaces of said belt drive members.

References Cited in the file of this patent

UNITED STATES PATENTS

688,742	Laag	Dec. 10, 1901
2,029,985	Clark et al.	Feb. 4, 1936
2,045,755	Cohn	June 30, 1936
2,568,920	Kinraide	Sept. 25, 1951
2,579,563	Gallinger	Dec. 25, 1951

FOREIGN PATENTS

1,032,880	France	Feb. 20, 1951