Dec. 11, 1928. 1,694,787

G. E. MOLYNEUX

MACHINE FOR OPERATING ON PIECES OF SHEET MATERIAL

Original Filed Aug. 28, 1917 5 Sheets-Sheet 1

Fig. 1.

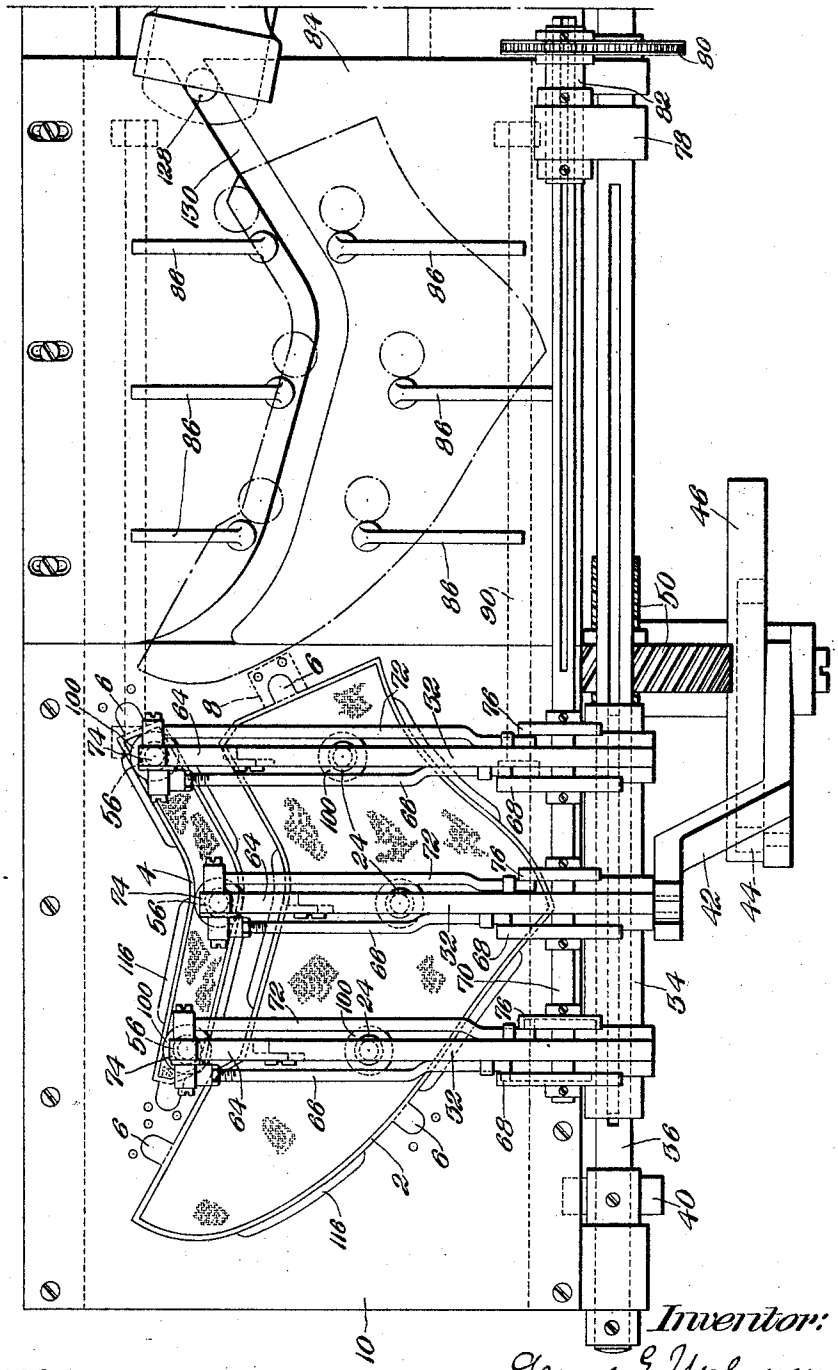

Witness:

Alfred H. McGlinchey.

Inventor:

George E. Molyneux

by Redding & Mackey

Attys

Dec. 11, 1928. 1,694,787

G. E. MOLYNEUX

MACHINE FOR OPERATING ON PIECES OF SHEET MATERIAL

Original Filed Aug. 28, 1917 5 Sheets-Sheet 2

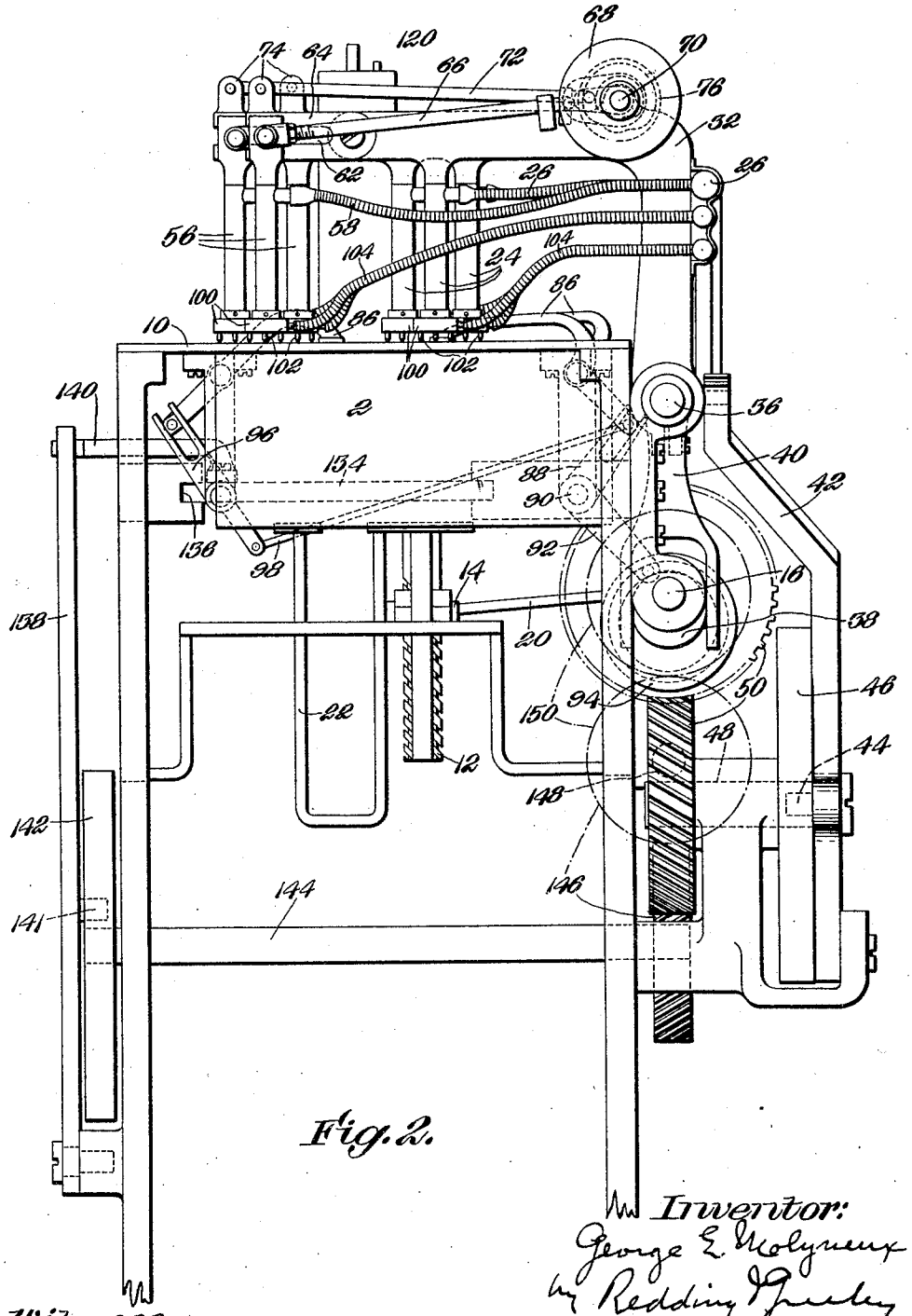

Fig. 2.

Witness:
Alfred H. McGlinchey.

Inventor:
George E. Molyneux
by Redding & Ganley
Attys

Dec. 11, 1928. 1,694,787

G. E. MOLYNEUX

MACHINE FOR OPERATING ON PIECES OF SHEET MATERIAL

Original Filed Aug. 28, 1917 5 Sheets-Sheet 3

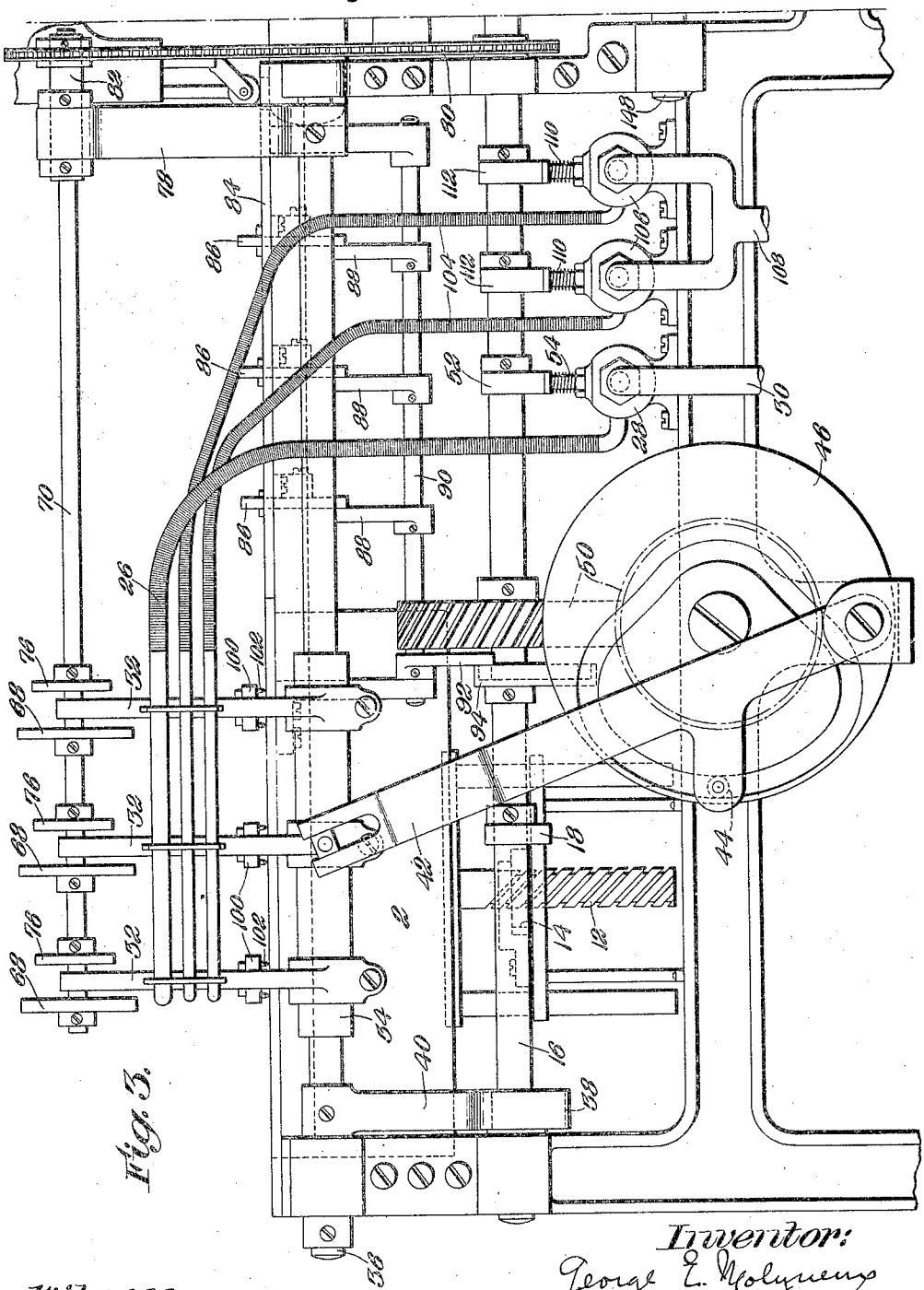

Fig. 3.

Witness:
Alfred H. McGlinchey.

Inventor:
George E. Molyneux
by Redding & Ferdon
Attys

Dec. 11, 1928. 1,694,787

G. E. MOLYNEUX

MACHINE FOR OPERATING ON PIECES OF SHEET MATERIAL

Original Filed Aug. 28, 1917 5 Sheets-Sheet 4

Fig. 4.

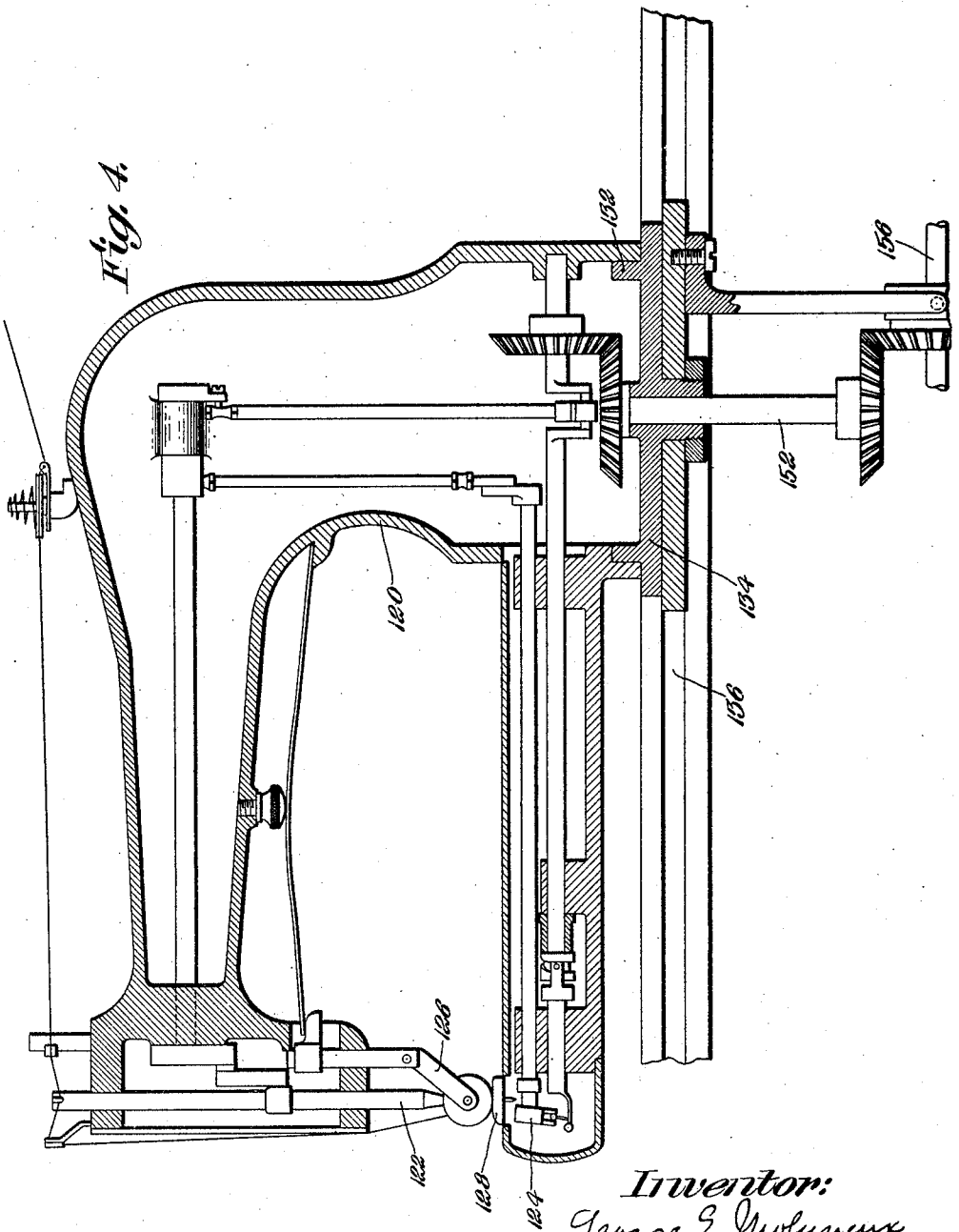

Witness:

Alfred H. McGlinchey.

Inventor:

George E. Molyneux

by Redding & Greeley

Attys

Dec. 11, 1928. 1,694,787

G. E. MOLYNEUX

MACHINE FOR OPERATING ON PIECES OF SHEET MATERIAL

Original Filed Aug. 28, 1917 5 Sheets-Sheet 5

Fig. 5.

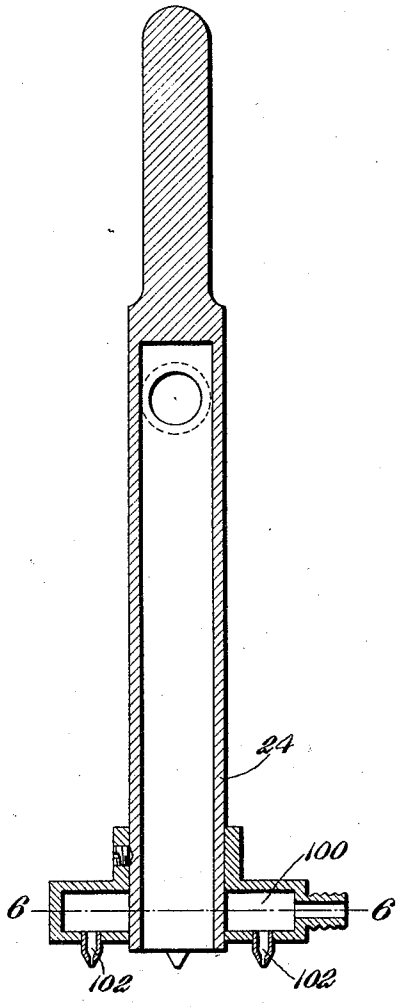

Fig. 6.

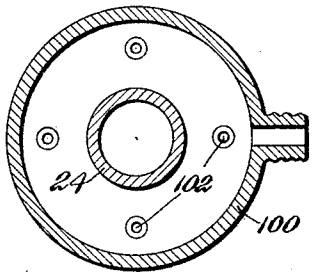

Fig. 7.

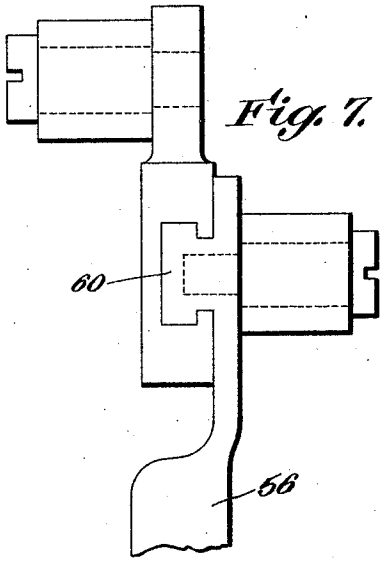

Fig. 8.

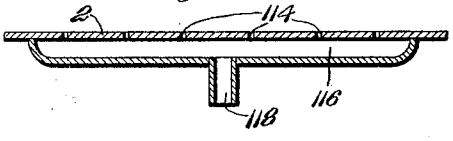

Fig. 9.

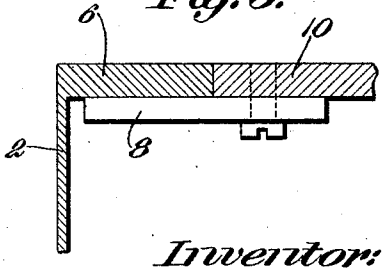

Witness:

Alfred H. McGlinchey.

Inventor:

George E. Molyneux

by Redding Greeley

Atty

Patented Dec. 11, 1928. 1,694,787

UNITED STATES PATENT OFFICE.

GEORGE E. MOLYNEUX, OF BAYONNE, NEW JERSEY, ASSIGNOR TO UNITED SHOE MACHINERY CORPORATION, OF BOSTON, MASSACHUSETTS, A CORPORATION OF NEW JERSEY.

MACHINE FOR OPERATING ON PIECES OF SHEET MATERIAL.

Original application filed August 28, 1917, Serial No. 188,589. Divided and this application filed September 16, 1921. Serial No. 501,125.

The invention relates to machines for assembling and securing together a plurality of pieces or blanks of limp and flexible sheet material such as parts of a shoe upper.

The present application is a division of application Serial No. 188,589, filed August 28, 1917.

While the invention may be utilized in assembling or in assembling and securing together the component pieces of various articles it has been developed with special reference to placing different shaped parts of shoe uppers in proper assembled relation to each other and presenting them to a stitching mechanism by which they are secured together and will be further explained with reference to such use.

In sewing together different shaped parts of shoe uppers, such for instance as half linings and facing strips, it has been the usual practice to tie the parts in separate bundles which are delivered to the operator. The operator first counts the number of half linings and the number of facing strips to be sure that the proper number of each has been delivered and then, taking a half lining and a facing strip from the respective bundles, lays the facing strip upon the half lining in a position as nearly correct as can be determined by the eye alone and then, holding the two together with the fingers, passes them to the sewing mechanism. The practice is the same in sewing together the vamp and toe tip pieces, and in sewing together the other parts of the upper. Not only is considerable time consumed in these successive hand operations, but there is great liability of failure to place one part upon another with the requisite accuracy, or to hold them in exact relation during the stitching operation. It is the object of this invention to provide apparatus by which these operations heretofore usually performed by hand, may be performed automatically, not only with a great saving in time but with the requisite accuracy in every instance.

In the preferred form of the invention chosen for illustration linings and facings or blanks are placed in the apparatus in suitable containers in which they are fed upward as the uppermost blank is removed. Vacuum fingers mounted upon a suitable carrier pick up the uppermost blank, a film of air being introduced between the topmost blank and the next below it for the purpose of freeing the topmost blank. The carrier then moves to a pre-determined position where the blank is released and clamped in position to be operated upon. The facing strip is picked up in the same manner and is placed in position on the lining blank and is then clamped in position in readiness to be stitched thereto. Blanks of different forms or other articles can be handled in like manner, with such adjustment or variation in details of the apparatus as may be necessary to meet the special requirements of each case.

The invention will be readily understood from an inspection of the accompanying drawings and the following detailed description of the mechanism illustrated therein. In the drawings Fig. 1 is a top view of an apparatus showing the preferred form of the invention, only a portion of the stitching mechanism for operating on the work being shown; Fig. 2 is an end elevation looking from the left in Fig. 1; Fig. 3 is a side elevation looking from the right in Fig. 2; Fig. 4 is a vertical sectional view of the stitching mechanism; Fig. 5 is a vertical sectional view through one of the vacuum pick-up fingers; Fig. 6 is a sectional view on line 6—6, Fig. 5; Fig. 7 is a detail view showing a part of the devices for picking up the facing strip; Fig. 8 is a horizontal section detail through the device for introducing a film of air between the topmost blank and the blank beneath it, and Fig. 9 is a sectional detail showing the support for the blank container.

In the machine shown in the drawings a stack of half linings of cloth for the uppers of shoes is carried in a magazine 2, which preferably conforms substantially to the shape of the blank or half lining and a stack of facing strip blanks of soft leather is carried in a magazine 4. Each magazine is provided at its upper edge with outwardly projecting lugs 6 which rest upon supports 8 secured to the under side of the table 10 and support the magazines with their upper edges flush with the upper surface of the table. The magazine 4 is preferably so placed with relation to the magazine 2 that each facing strip may be brought into position on the edge of the corresponding half lining by a parallel movement. The bottom of the maga-

zine 2 is carried by a vertical screw 12 engaged by a nut 14 in the form of a ratchet disc which may be given a step by step movement through a pawl carried by a rod 20 which is reciprocated from the cam shaft 16 through an eccentric 18 to intermittently raise the stack of blanks as the top blanks are taken away. The bottom of the magazine 4 is connected through a yoke 22 with the bottom of the magazine 2 so that both stacks of blanks are raised simultaneously.

The pick up fingers for taking the blanks from the magazine 2 consist of vacuum tubes 24 having open lower ends and connected by flexible tubes 26 and valve 28 to a vacuum system indicated by the pipe 30. The pick up fingers are supported by arms 32 secured on a carrier sleeve 34 which is mounted on a rock shaft 36 and is connected by a key and keyway to rock therewith while being free to slide thereon. There may be one or several pick up fingers and arms mounted on the carrier according to the shape and size of the blank to be handled. The carrier is rocked to raise and lower the pick up fingers by an eccentric 38 secured to the shaft 16 and embraced by the forked end of an arm 40 secured to the rock shaft. The carrier is moved lengthwise of the rock shaft by a lever 42, the upper end of which is slotted to embrace a pin projecting from the sleeve. The lever is provided with a pin 44 which engages a cam groove formed in the face of a disk 46 secured to the shaft 48 and rotated through gears 50 connecting the shaft with shaft 16.

When the carrier is rocked to bring the pick up fingers down upon the topmost blank in the magazine the valve 28 is opened by a cam 52 on the shaft 16 and is held open during the rocking of the carrier to lift the blank during the longitudinal movement of the carrier to transport the blank into the position indicated in dotted lines in Fig. 1, and during the rocking of the carrier to deposit the blank in this position. After the blank has been deposited the cam 52 permits the valve to be closed by its spring 54, thereby cutting off communication between the vacuum system and the pick up fingers so that the blank is released by the fingers.

The pick up fingers 56 for taking the blanks from the magazine 4 are the same in construction as the pick up fingers 24 and are connected by flexible tubes 58 with the vacuum tubing 26 which is controlled by the valve 28. In order that the facing strip blank taken from the magazine 4 may be superimposed upon the half lining taken from the magazine 2 and be accurately positioned with relation thereto the pick up fingers 56 are so mounted on the arms 32 that they may move vertically and laterally with relation thereto. As shown each picker finger 56 depends from a slide block 60 mounted in a guideway 62 formed in an arm 64 which is pivoted to the end of an arm 32 and forms an extension thereof. Each slide is moved in its guideway through a link 66, one end of which is connected to the slide and the other end of which carries a pin engaging a cam groove formed in a disk 68 which is secured to a shaft 70 mounted on the carrier arms 32. Each arm 64 is raised and lowered with relation to the arm 32 by a link 72, one end of which is connected to a projection 74 on the arm, and the other end of which is provided with a pin engaging a groove formed in a cam disk 76 secured to the shaft 70. The shaft 70 is mounted in the carrier arms 32 and in an arm 78 secured to the rock shaft 36 and is driven from the shaft 16 through a chain 80 connecting a sprocket wheel on the shaft with a sprocket wheel on a sleeve 82 which is mounted in the arm 78 and is connected with the shaft 70 by a key and keyway permitting lengthwise movement of the shaft through the sleeve.

The parts are so timed that just before the pick up fingers 24 are raised to lift the topmost blank from the magazine 2 the pick up fingers 56 will be swung upward to lift the topmost blank from the magazine 4. Thereafter the pick up fingers 56 will be moved toward the right in Fig. 2 to carry the facing strip blank over the half lining blank carried by the pick up fingers 24, and then the pick up fingers 56 will swing downward to lay the facing blank on the half lining blank. Meanwhile the carrier sleeve 34 is rocked so as to lift the pick up fingers 24 as well as the pick up fingers 56 and is then moved longitudinally to carry the blanks into position to be presented to the sewing mechanism and is finally rocked to place two assembled blanks upon the work table 84 in position to be operated upon by the sewing mechanism (or other mechanism for performing an operation on the blanks).

While the blanks are being sewed together or otherwise operated upon they should be maintained in their assembled relation, and for this purpose two series of clamps are provided arranged on opposite sides of the path along which the mechanism for operating on the blank acts, and acting to clamp the blanks on the work table along opposite sides of the line of operation. The clamps are in the form of levers 86 extending down through the work table and pivotally supported upon its under side. The lower ends of the right hand series of clamps in Fig. 2 are engaged by forked arms 88 carried by a shaft 90 which also carries an arm 92 provided with a pin engaging a cam groove formed in a disk 94 secured to the shaft 16. The lower ends of the series of clamp levers 86 at the left in Fig. 2 are engaged by the forked arms of levers 96, the lower ends of which are connected by links 98 with the lower ends of the levers 86 at the right so that both series of

clamping levers are operated in unison. When the blanks are being picked up and transported to the work table the clamp levers are swung back out of the way but when the blanks have been deposited on the work table the clamp arms are swung forward to hold the blanks firmly in position on the table with the facing strip in position on the half lining in readiness for the operation on the blanks.

In handling comparatively thin and flexible blanks, such as the parts of a shoe upper, it is desirable that a thin film of air be introduced between the top blank and the next blank below it when the top blank is to be removed. For this purpose each pick up finger is provided near its lower end with a header 100, provided on its under side with hollow pointed tubes 102 which project below the end of the finger just far enough to penetrate through the topmost blank. The headers are connected through tubing 104 and valves 106 with a source of air under pressure indicated by the pipe 108. The valves are opened by their springs 110 and are closed by cams 112 on the shaft 16. When the pick up fingers are brought down upon the topmost blank the valves 106 are opened so that air is delivered through the hollow pointed tubes 102 between the topmost blank and the next one below it. The valve may then close until the pick up finger is again brought into contact with the succeeding blank. In case the puncturing of the blanks, in order to introduce the air between the blanks, is undesirable the wall of the magazine may be provided at a distance below its upper edge substantially equal to the thickness of each blank, with a series of small holes 114 which communicate with an external header 116 connected at 118 with the air tubing 104 (Fig. 8).

The mechanism for sewing together the assembled blanks comprises a sewing machine 120 which may be of the usual construction. In addition to the usual needle bar 122, looper mechanism 124, and presser foot 126, the machine is provided at the sewing point with a stud or roller 128 adapted to travel in a slot 130 in the work table. This slot conforms to the line on which the stitching of the facing strip to the lining is to be done and causes the stitch forming mechanism to follow the desired line as the sewing mechanism is moved with relation to the work table. In order that the sewing mechanism may follow the guiding slot 130 the sewing machine frame is mounted to turn about an annular flange 132 formed on a carrier block 134 which is mounted to slide in a guideway 136 formed in the machine frame. The carrier block is moved forward and back in the guideway by a lever 138, the upper end of which engages an arm 140 projecting from the guide block. The lever is provided with a pin 141 engaging a cam groove formed in a cam disk 142 which is secured to a transverse shaft 144. This shaft is driven through gears 146 from the main driving shaft 148 which also drives the cam shaft 16 through gears 150. The sewing machine is driven through gearing indicated at 152 in Fig. 4 from a shaft 156 which may in turn be driven from the main driving shaft through suitably controlled stopping and starting mechanism.

The invention having been thus described, what is claimed is:

1. A machine for operating on pieces of limp and flexible sheet material having, in combination, mechanism acting to automatically pick up and place a plurality of such pieces in position to be secured together, means for holding the pieces extended in such relation during the securing operation, means acting progressively along the surface of the pieces to secure them together, and means for automatically releasing the material from the holding means at the completion of the securing operation.

2. A machine for operating on parts of a shoe upper having, in combination, mechanism for automatically assembling a plurality of the limp and flexible parts of a shoe upper in proper relation to be secured together, means for retaining the parts extended in such relation during the securing operation, mechanism for securing the parts together, and means for automatically releasing them at the completion of the securing operation.

3. A machine for operating on pieces of sheet material having, in combination, means acting to automatically assemble differently shaped pieces of such material in predetermined superimposed relation, means acting progressively along the surface of the assembled pieces to secure them together, and means for actuating said assembling and securing means.

4. A machine for operating on pieces of sheet material having, in combination, means for supporting a plurality of stacks of differently shaped pieces of such material, automatic devices for taking pieces form each stack and assembling them in predetermined superimposed relation, means for securing the assembled pieces together, and means for relatively moving the assembled pieces and securing means to determine the line of travel of the securing means along the assembled pieces.

5. A machine for operating on pieces of sheet material having, in combination, means for supporting a plurality of stacks of pieces of such material in fixed relation to each other, devices for taking the pieces from each stack, means for relatively shifting the devices to superimpose one piece upon another, and means for moving the devices to transport the pieces.

6. A machine for operating on pieces of

sheet material having, in combination, a carrier, pick up devices on the carrier for picking up a plurality of blanks of such material, mechanism for relatively moving the devices on the carrier to superimpose one blank upon another, and mechanism for moving the carrier to transport the blanks.

7. A machine for operating on pieces of sheet material having, in combination, means for supporting a plurality of stacks of blanks of such material in fixed relation to each other, devices for taking the blanks from each stack, means for relatively shifting the devices to superimpose one blank upon another, means for moving the devices to present the assembled blanks in position to be operated upon, and means for operating upon the blanks to secure them together.

8. A machine for operating on pieces of sheet material having, in combination, mechanism for securing together a plurality of pieces of such material, a support for the plurality of pieces, a carrier provided with devices for taking such pieces from the support, assembling them in predetermined superimposed relation and presenting them to the securing mechanism, and mechanism for actuating the carrier and devices and for relatively moving the assembled pieces and securing mechanism to determine the line of travel of the securing mechanism along the pieces.

9. A machine for operating on parts of a shoe upper having, in combination, means for supporting a plurality of the different parts of a shoe upper, means for taking the parts from the supporting means, assembling them in predetermined relation and presenting them to a sewing mechanism, and a sewing mechanism for sewing together the parts.

10. A machine for operating on pieces of limp and flexible sheet material having, in combination, a support for a plurality of such pieces, means for taking the pieces from the support, assembling them in pre-determined relation and placing them upon a work table, means for holding them extended in assembled relation on the work table, and means for operating progressively along the surface of the pieces when so held.

11. A machine for operating on pieces of sheet material having, in combination, means for supporting a plurality of stacks of pieces of such material, pick up devices for taking pieces from each stack, assembling them and placing them on a work table, means for holding them in assembled relation on the table, means for operating on them while so held, and means for relatively moving the operating means and work table to transfer the operating means along the assembled pieces.

12. A machine for operating on pieces of sheet material having, in combination, means for operating on such material, a two-part carrier, pick up devices on each part for supporting different pieces of material, and means for relatively moving the parts to superimpose the pieces.

13. A machine for operating on pieces of sheet material having, in combination, a support for a stack of pieces of such material, a pick up finger to engage and transport the topmost piece, a carrier for the pick up finger, means to actuate the carrier, a work table, clamping devices to secure the article on the work table, a movable sewing machine, means to drive the sewing machine, and means to traverse the sewing mechanism during its operation on the piece to be sewed.

14. A machine for operating on pieces of sheet material having, in combination, a work table, means to transport to the work table a piece to be sewed, clamping devices to hold the piece in position on the work table, the work table being provided with a guide slot conforming to the pre-determined line of stitching, a sewing mechanism free to swing upon a vertical axis and engaging the slot in the work table to be guided thereby, means to drive the sewing mechanism, and means to traverse the sewing mechanism over the work table.

15. A machine for operating on pieces of sheet material having, in combination, a pick up finger, a carrier and carrier arm to support and move the pick up finger, a second pick up finger, means to support the same upon the carrier arm, and means to operate the last named pick up finger to place the piece picked up by it in position on the piece picked up by the first named pick up finger.

16. A machine for operating on pieces of sheet material having, in combination, two sets of pick up devices, means to move one set of pick up devices relatively to the other so as to superimpose one piece picked up upon the other, and means to move both sets of pick up devices together to transport the two pieces together.

17. A machine for operating on pieces of sheet material having, in combination, two sets of pick up devices, means to move one set of pick up devices relatively to the other so as to superimpose one piece picked up upon the other, means to move both sets of pick up devices together to transfer the two pieces together, a work table, and means to clamp the two pieces together upon the work table to receive further operation thereon.

18. A machine for operating on pieces of sheet material having, in combination, two sets of pick up devices, means to move one set of pick up devices relatively to the other so as to superimpose one piece picked up on the other, means to move both sets of pick up devices together to transport the two pieces together, a work table, means to clamp the two pieces together upon the work table, a

stitching mechanism, and means to traverse the stitching mechanism over the work table.

19. A machine for operating on pieces of sheet material having, in combination, two sets of pick up devices, means to move one set of pick up devices relatively to the other so as to superimpose one piece picked up upon the other, means to move both sets of pick up devices together to transport the two pieces together, a work table, means to clamp the two pieces together upon the work table, a stitching mechanism, and means to traverse the stitching mechanism over the work table, the work table being provided with a guide slot to conform to the line of stitching, and the stitching mechanism being engaged with such slot and freely movable to follow the same.

20. A machine for operating on pieces of sheet material having, in combination, means for operating on such material, a two-part carrier, pick-up devices on each part for supporting different pieces of material, and means for relatively moving the parts edgewise of the pieces to superimpose the pieces.

21. A machine for securing together parts of a shoe upper having, in combination, means for supporting stacks of upper lining blanks and facing strip blanks, means for taking a blank from each stack, assembling them in predetermined relation and presenting them to a sewing mechanism, and a sewing mechanism for sewing together the blanks.

22. A machine for securing together parts of a shoe upper having, in combniation, means for supporting two parts of a shoe upper, a carrier having pick-up devices for picking up said parts, means for relatively moving the parts edgewise of the pieces to superimpose them, and sewing mechanism for sewing the parts together.

23. A machine for operating on pieces of sheet material having, in combination, two sets of pick-up devices for picking up two pieces of such material, means to move one set of pick-up devices relatively to the other edgewise of the pieces so as to superimpose one piece picked up upon the other, and means to move both sets of pick-up devices together to transport the two pieces.

24. A machine for operating on pieces of limp and flexible sheet material having, in combination, mechanism acting automatically to pick up and place a plurality of such pieces in position to be secured together, means for holding the pieces extended in such relation during the securing operation, and means acting progressively along the surface of the pieces to secure them together.

GEORGE E. MOLYNEUX.