Oct. 10, 1950 A. HAMMERSTEIN 2,525,409

DISPENSING DEVICE FOR TABLE SALT AND THE LIKE

Filed April 17, 1946

Fig. 1.

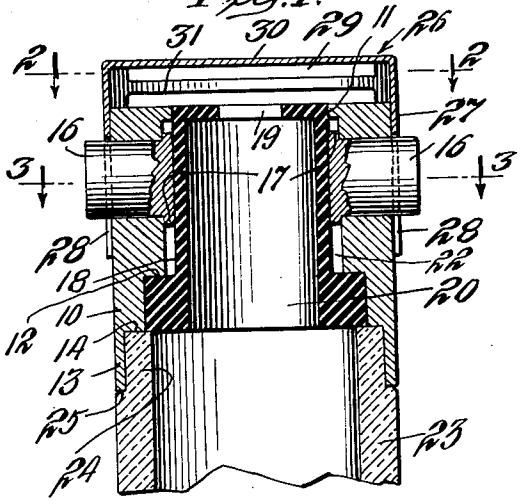

Fig. 3.

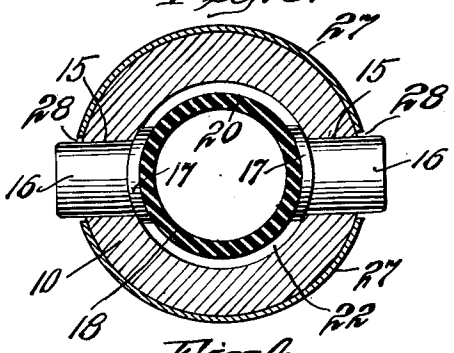

Fig. 4.

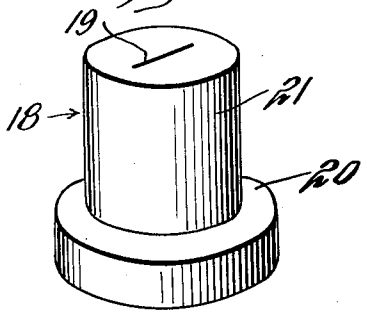

Fig. 2.

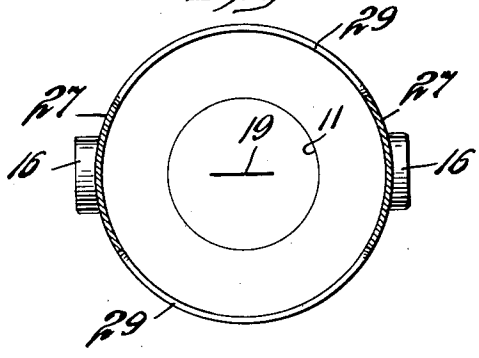

Fig. 5.

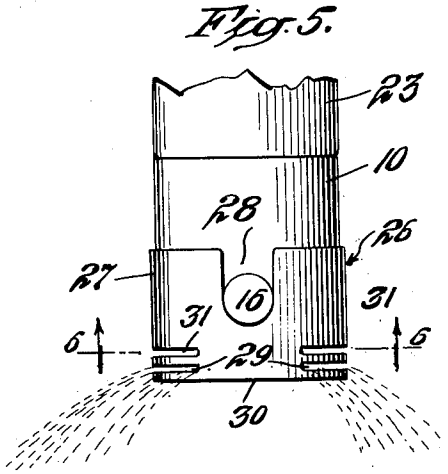

Fig. 6.

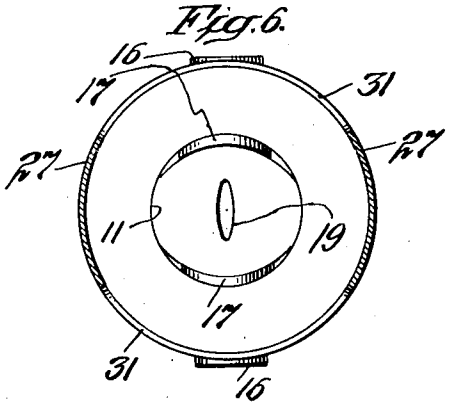

INVENTOR.
ARTHUR HAMMERSTEIN
C. W. Deller

Patented Oct. 10, 1950 2,525,409

UNITED STATES PATENT OFFICE

2,525,409

DISPENSING DEVICE FOR TABLE SALT AND THE LIKE

Arthur Hammerstein, Palatine, Ill.

Application April 17, 1946, Serial No. 662,738

4 Claims. (Cl. 222—214)

1

The invention relates to dispensing devices, and more particularly to those designed for dispensing table salt or like materials.

The present invention constitutes an improvement on that set forth in my co-pending application, Ser. No. 616,316, filed September 14, 1945, (U. S. Patent No. 2,473,707) entitled "Dispensing Devices."

The objects here are identical, but include in addition the provision for more effective dispersal or distribution of the dispensed material and for an even greater sanitary protection.

A feature of the improvement whereby the above additional objects are attained resides in the combination, with the novel dispensing structure of my prior invention, of protective cap means having laterally-placed dispensing apertures.

Another feature of the present improvement is the combination of ventilating apertures with the aforesaid dispensing apertures, whereby an effective circulation of air is obtained within the protective cap means at all times.

Further objects and features will be apparent from the following detailed description of the preferred specific embodiment illustrated in the accompanying drawing, in which:

Fig. 1 is a vertical central section through a dispensing device pursuant to the invention as attached to a container for the material to be dispensed, part of the container being broken away;

Fig. 2 is a horizontal section taken on the line 2—2, Fig. 1;

Fig. 3 is a horizontal section taken on the line 3—3, Fig. 1;

Fig. 4 is a detail in perspective of the resilient control means forming part of the dispensing device;

Fig. 5 is a view in elevation, drawn to a reduced scale, of the dispensing device and container as they appear during a dispensing operation; and

Fig. 6 is a horizontal section taken on the line 6—6, Fig. 5.

As shown in the illustrated example, the novel dispensing device preferably comprises an open-ended, tubular enclosing member 10 or neck of any convenient dimensions as an external casing, such neck member being formed of metal, glass, a plastic or of some other similar rigid material. The outer open end of the casing 10 is, in the illustrated instance, provided with an annular inwardly-directed flange 11 forming an opening for a purpose hereinafter made clear,

2

and a shoulder 12 is formed internally of the casing at a predetermined distance measured axially from the flange 11, all as shown in Fig. 1. At its opposite end the casing 10 is provided with an annular, axially-directed flange 13, which terminates at an internal annular shoulder 14 and serves as means for connecting the device to a container in a frictional slide fit. Between the shoulder 14 and the shoulder 12 an annular seat is formed for receiving and frictionally returning the dispensing valve member of the device.

In proximity to the annular flange 11, the casing 10 is provided with openings 15 extending through the tube wall thereof at diametrically opposite points, for the accommodation of manually-operable plungers 16, which lie slidably therein and normally project outwardly beyond said casing, being thereby accessible for manual manipulation, and which at their inner ends are provided with annular collar portions 17. The curved inner end surfaces of the plungers 16 are normally disposed in substantial registry with the annular surface of the flange 11 interiorly of the casing 10, by reason of the resilient character of the dispensing valve member, as hereinafter explained.

The control means, whereby the dispensing of the comminuted material is controlled, includes an elongated, hollow, flexible and resilient sleeve valve member 18 having its outer end closed and provided with a slit opening 19 which, because of the inherent resiliency of the member 18, is normally maintained in a tightly closed condition sealing such opening against atmospheric conditions. The flexible and resilient valve member 18 comprises at its end which is inner in the device, an annular, hollow base section 20. Such base section fits beneath the internal shoulder 12, its outer diameter preferably being such as will enable it to snugly hug the annular seat formed between the shoulders 12 and 14. Such base section 20 preferably has its inner end face disposed flush with the shoulder 14. From the base section 20 the flexible, resilient valve member 18 extends in the form of an elongated, hollow, preferably cylindrical sleeve or control section 21 which preferably is integral with the base section 20 and is dimensioned, relatively to the casing 10, to leave a very thin internal annular space 22 between said sleeve section 21 and the inner wall surface of the casing 10, as illustrated in Figs. 1 and 5, such space being preferably $\frac{1}{32}$'' or less in thickness, just sufficient to accommodate the collared ends

of the respective plungers 16. The base section 20 serves to fix and return the sleeve or control section 21 in place. The flange 11 serves to close the space 22 at its top, and is therefore equivalent thereto in annular thickness.

In the assembled normal condition of the device the curved inner end surfaces of the plungers 16 and of their encircling collar portions 17 are ordinarily located in surface engagement with the sleeve or control section 21 of the resilient member 18, the plunger portions projecting outwardly through the openings 15 and beyond the outer wall surface of the casing 10, as shown in Figs. 1, 2, 3 and 4, providing for manual operating of the device. It should be noted that, since the plungers 16 are slidably disposed in their respective receiving openings 15, the outward resilient urge of the sleeve section 21 of the valve maintains them in their normal outwardly projecting positions.

In practice, the novel dispensing device is combined with a cooperating container 23, which, as shown, may conveniently have an axially-projecting flange 24 at its top dimensioned to form, with the body proper of the container, a horizontal external shoulder 25 disposed at a distance from the open dispensing end. The novel dispensing device is advantageous affixed to the container by forcing the axial flange 13 thereof over the axial flange 24 of the container, the shoulder 14 coming to rest against the end surface of the flange 24 and the end face of the flange 13 against the horizontal shoulder 25. In this arrangement the parts are so dimensioned that the flange 13 will fit over the flange 24 frictionally to a degree sufficient to effectively maintain the dispensing device in operative association with the container 23. Obviously, other well-known types of connecting means for combining the novel dispensing device in associated operative relation with the container may be substituted if desired, or the casing 10 might even be formed integral with the container, it being presupposed in that event that the container is provided with a bottom opening of well-known type for introduction of contents. In any case, in the assembled condition the interior of the flexible, resilient valve member 18 is in open communication with the interior of the container.

In actual use of the illustrated embodiment the table salt or other like comminuted material is introduced into the container 23 through the open top thereof by removing the dispensing device, after which the dispensing device is replaced.

When it is desired to dispense material from the container 23, the latter is held in an inverted position, and inward pressure is exerted upon the plungers 16, for instance, by the thumb and forefinger of a hand of the user, to thereby deform the elongated sleeve or control section 21 of the flexible, resilient valve member 18 inwardly. This inward deformation of the flexible, resilient valve member 18 by the inward action of the plungers 16 spreads the opposite defining surfaces of the slit 19 apart and opens such slit, converting it into a discharge opening, as shown in Fig. 3, through which a desired quantity of the material within container 23 passes under the influence of gravity. Accordingly, it is seen that by thus opening the slit 19 and inverting the container 23, or vice versa, the salt or other contents will at once start to flow, without requiring any other manipulation, such as shaking the container. By regulating the manual pressure on the plungers 16 it is possible to control the extent of opening of the slit 19 to a greater or lesser degree, thereby regulating the flow accordingly.

After the desired quantity of salt or other material has been thus discharged from the container, pressure on the plungers 16 is relaxed, thereby permitting the flexible, resilient valve member 18 to resume its normal expanded condition by reason of its inherent resiliency. Coincidentally, the plungers 16 are forced outwardly to the normal positions shown in Fig. 1. This return of the flexible, resilient valve member 18 to its normal condition naturally automatically restores the opened slit 19 to its tightly closed condition, sealing the container 23 against the atmosphere and thereby protecting the contents thereof against absorption of moisture and from contamination.

It will be noted that the flexible, resilient dispensing valve member 18 need not be touched by the user of the device during the expulsion of contents from the container, and accordingly is protected from contamination. Further, the plungers 16 produce definite expelling forces on material which has flowed into the interior of the deformable valve member 18, thereby insuring the desired discharge of material through the open slit 19 regardless of any tendency for such material to choke the discharge opening.

As so far described, the dispensing device of the invention is practically identical with that set forth in my above-referred to co-pending application, Ser. No. 616,316.

In accordance with the present improvement a novel cap member is provided for the device, thereby bringing about a predetermined dispersal and distribution of the dispensed material as well as adding effective sanitary protection for the device as a whole.

As illustrated, the cap member is a separate, substantially thimble-shaped element 26, closely fitted over the open outer end of the tubular casing 10. Its cylindrical, lateral wall 27 is diametrically oppositely indentured, as at 28, 28, for accommodating the outwardly-extending plungers 16, 16. The close fit on casing 10 is preferably a forced one so there will be no danger of accidental dislodgement during use of the device. Such a fit is practical because there is ordinarily no need to remove the cap from the device, cleaning being easily accomplished by removal of the flexible, resilient valve member from below in the usual manner, followed by a washing operation. Nevertheless, the cap member may be removably secured in place by any well-known means if desired, such as by screw threads or bayonet slots and cooperating pins, the plungers 16, 16, in such instances being advantageously installed in position following placement of the cap member so that its indentures 28, 28, register with the plunger-receiving openings 15, 15. In certain instances it may be desirable to form the cap member integral with the casing 10.

The cap member is apertured to provide for outflow of the salt or other material dispensed through the slit 19 of valve member 18.

Thus, the illustrated cap member 26 is provided with relatively long, arcuate slots 29, 29 disposed laterally, in diametrically opposite relationship, in cylindrical wall 27 and preferably opening flush against the inside face of the imperforate top 30 of the cap member.

A second set of similar arcuate slots 31, 31 is advantageously provided at a location spaced apart, along the length of cylindrical wall 27,

from the first set 29, 29. This second set of slots insures adequate circulation of air within the confines of the cap member 26, so there will be no tendency for entrapment and caking of material therein. In this connection, it is desirable that the flexible, resilient valve member 18 be so dimensioned that its normally closed dispensing end is flush with the outer end of casing 10; see Fig. 1. Also, it is desirable that the bottom defining edges of slots 31, 31 of the cap member lie flush with the said outer end of casing 10 and the said dispensing end of the valve member.

As illustrated in Fig. 5, during the dispensing operation the stream of material discharged through the opened slit 19 is deflected at substantially right angles to its normal path of flow by the closed top of the cap member, and passes out of the device through the slots 29, 29 in a dispersed condition. If desired, to better concentrate the dispersed flow on a particular area, the container and associated dispensing device may be tilted at an angle during the dispensing operation (not shown), so that discharge will occur through only one of the slots 29, 29.

From the above it is apparent that the flexible, resilient valve member 18 is substantially completely enclosed by the combined casing 10 and cap member 26, which together form, in effect, a protective housing therearound. Such housing discourages unwarranted tampering with and handling of the dispensing end of the valve member, and contributes considerably to the maintenance of the device and contents in sanitary condition.

Preferably, the resilient member 18, as a whole, is constructed of rubber or other suitable inherently resilient material, it being understood, however, that the use of other materials in its construction, in combination with means for providing the desired resiliency, is not precluded.

While the invention is here illustrated and described with respect to a preferred specific form thereof, it should be understood that various changes may be made in that specific form and various other forms thereof may be constructed by those skilled in the art without departing from the spirit and generic purview of the invention as set forth herein and defined by the following claims.

I claim:

1. A dispensing device, comprising casing means having a discharge end; deformable valve means embodying a normally closed dispensing opening, said valve means being disposed within said casing with its said dispensing opening in discharge adjacency to the discharge end of said casing means; manually operable means accessible externally of said casing for operating said valve means; passage means leading into said valve means for the supply of material to be dispensed; and cap means having a closed end disposed beyond and protectively enclosing the discharge end of said casing means, said cap means having a plurality of discharge apertures in its side walls, affording discharge from the device of material dispensed.

2. A dispensing device in accordance with claim 1 wherein the deformable valve means comprises an elongated flexible resilient sleeve member having a closed end provided with a normally closed slit dispensing opening, and wherein the manually operable valve-operating means comprises oppositely-disposed plungers slidably mounted in the walls of the casing means.

3. A dispensing device in accordance with claim 1 wherein the cap means is substantially thimble-shaped and has elongated apertures formed in its lateral wall.

4. A dispensing device in accordance with claim 1 wherein the cap means is substantially thimble-shaped, having a closed end and elongated slots in its lateral wall, said slots comprising a set extending circumferentially proximate said closed end and a set extending circumferentially adjacent the dispensing end of the valve means.

ARTHUR HAMMERSTEIN.

REFERENCES CITED

The following references are of record in the file of this patent:

UNITED STATES PATENTS

Number	Name	Date
1,971,284	Stockman	Aug. 21, 1934
2,122,299	Sloan	June 28, 1938
2,219,604	Trotter	Oct. 29, 1940
2,316,516	Hammerstein	Apr. 13, 1943