(No Model.) 3 Sheets—Sheet 1.

A. WOODRUFF.

INKING PAD.

No. 456,607. Patented July 28, 1891.

Fig. 1.

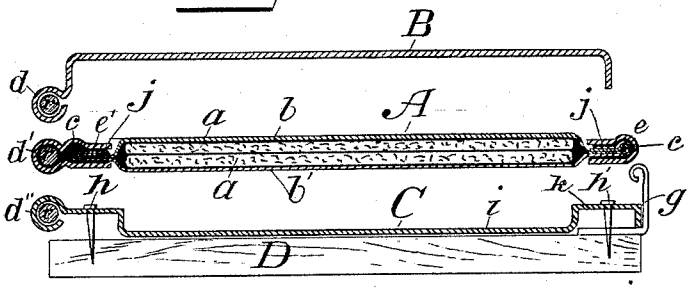

Fig. 2.

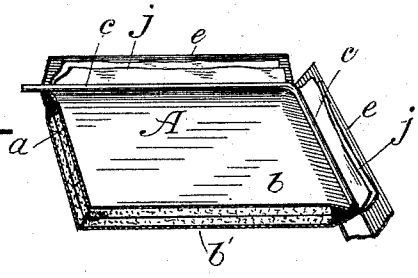

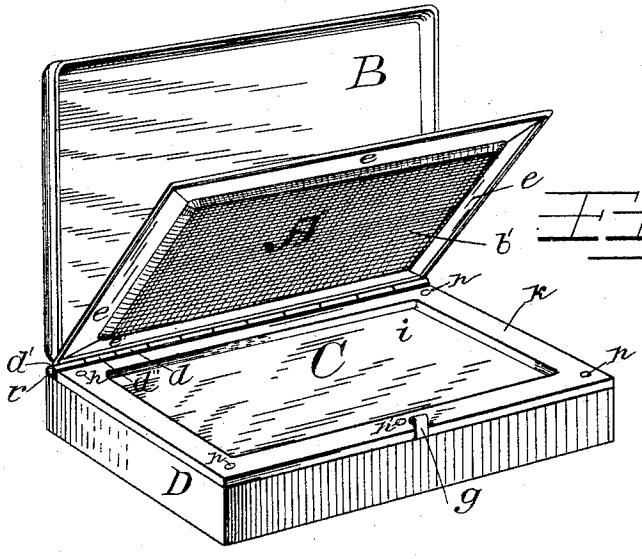

Fig. 3.

WITNESSES;

C. D. Swett.

Wm. T. Robertson

Alonzo Woodruff, INVENTOR,

BY A. M. Smith & Son.

ATTORNEYS.

THE NORRIS PETERS CO., PHOTO-LITHO., WASHINGTON, D. C.

(No Model.) 3 Sheets—Sheet 2.

A. WOODRUFF.

INKING PAD.

No. 456,607. Patented July 28, 1891.

Fig. 4.

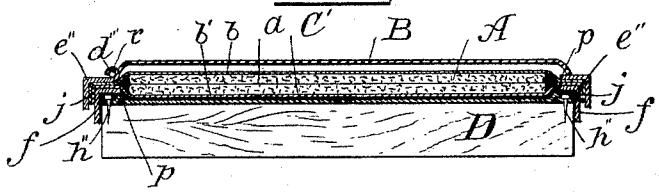

Fig. 5.

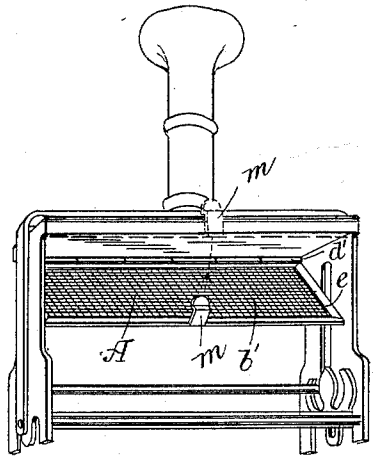

WITNESSES:

C. D. Sweet

H. R. Robertson

Alonzo Woodruff, INVENTOR,

BY A. M. Smith & Son,

ATTORNEYS.

THE NORRIS PETERS CO., PHOTO-LITHO., WASHINGTON, D. C.

(No Model.) 3 Sheets—Sheet 3.

A. WOODRUFF.

INKING PAD.

No. 456,607. Patented July 28, 1891.

Fig. 6.

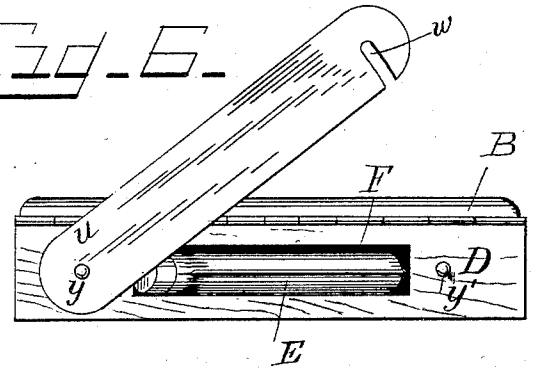

Fig. 7.

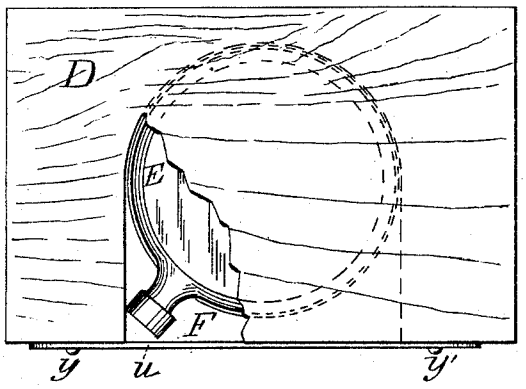

WITNESSES:

C. L. Sweet.

H. T. Robertson

Alonzo Woodruff, INVENTOR.

BY A. M. Smith & Son,

ATTORNEYS.

THE NORRIS PETERS CO., PHOTO-LITHO., WASHINGTON, D. C.

UNITED STATES PATENT OFFICE.

ALONZO WOODRUFF, OF AUBURN, NEW YORK.

INKING-PAD.

SPECIFICATION forming part of Letters Patent No. 456,607, dated July 28, 1891.

Application filed February 20, 1891. Serial No. 382,232. (No model.)

To all whom it may concern:

Be it known that I, ALONZO WOODRUFF, a citizen of the United States, and a resident of Auburn, county of Cayuga, and State of New York, have invented a new and useful Improvement in Inking-Pads, of which the following is a full, clear, and exact description, reference being had to the accompanying drawings, making a part of this specification.

My invention relates to an improvement in the construction of inking-pads of the class used in connection with rubber stamps or other printing devices in which type or raised characters are employed for producing an impression and which require inking.

The object of my invention is to produce a self-supplying or fountain inking-pad or one to which the ink may be applied in liquid or paste form and which will take up such supply of ink and distribute it equally throughout the same, thus saving time and the inconvenience now experienced in replenishing ink-pads.

My invention consists in the combination, with a suitable base or support, of a recessed plate or cup secured thereto and adapted to receive the supply of ink, a pad of felt or other absorbent material supported in a surrounding frame hinged to the ink cup or reservoir, and a cover for said pad overlying both the pad and ink-cup and hinged to the latter, as hereinafter described; also, in certain details of construction and arrangement of parts hereinafter set forth and claimed.

In the accompanying drawings, Figure 1 is a transverse vertical section through my improved inking-pad. Fig. 2 is a sectional perspective view showing the arrangement of the layers of felt and its textile covering and the manner of applying the supporting-frame thereto. Fig. 3 is a perspective view of the device complete and ready for the market. Fig. 4 is a transverse vertical section similar to Fig. 1, showing a modification in the construction of the ink-cup and the pad-supporting frame. Fig. 5 illustrates in perspective the application of my improvement to the ordinary self-inking stamp. Fig. 6 is a rear view of my improved ink-pad with the wooden base shown mortised out to form a pocket for the reception of a can or bottle of ink. Fig. 7 is a plan view of the base-board detached and partly broken away to show the pocket for the ink-vessel.

In Figs. 1, 2, and 3, which illustrate my preferred form of construction, A indicates the inking-pad as a whole. *a a* represent layers of felt or other suitable absorbent material incased in or entirely covered by two pieces *b b'* of some suitable textile fabric. The edges *j* of these covering-pieces *b b'* beyond the edges of the felt *a* are turned over a wire frame *c* and clamped thereupon by a sheet-metal frame *e e'*, which thus supports both the layers of felt and their textile covering in proper shape.

C represents the ink-cup, which is formed from sheet metal bent into the form shown in Fig. 1—that is, having the base *i* and elevated rim *k* or cast—as shown in Fig. 3, with a depression or reservoir *i* and flange or rim *k*. This cup or reservoir C is secured upon a base-block D, preferably of wood, by means of nails or screws *h h'*, as shown. B indicates the cover, also made preferably of sheet metal and formed with a downwardly-extending rim or flange, as shown, adapted to rest snugly upon the pad-supporting frame *e* and prevent too free evaporation of the ink from the pad and reservoir.

The cup or reservoir C, ink-pad-supporting frame *e*, and cover B are each provided with perforated ears *d''*, *d'*, and *d*, respectively, which interlap, as shown in Fig. 3, and are united by a common pivotal rod *r*, thus hinging said cover and pad-frame to the cup or reservoir and its base in an economical and effective manner.

g indicates a spring-catch, preferably secured between the base D and cup C by the pin *h'* and serving to hold the ink-pad frame down against the flange or rim *k* of the ink-reservoir, while permitting said frame to be lifted when necessary.

The ink in liquid state or in paste consistency is supplied to the cup C while the pad is elevated, as shown in Fig. 3. The pad is then lowered into the cup and held firmly down by the spring-catch *g*. The layers of felt *a* absorb a certain quantity of ink, which is fed by capillary attraction to the upper face of the pad and its textile covering, from which it is taken by the rubber stamp or other printing device applied thereto.

In Fig. 4 the cup or reservoir C is made from sheet metal having a ridge or flange *p* stamped up from it, which confines the ink and forms a very simple and cheap construction. Another modification is shown in this figure in the form of the pad-supporting frame, which in this instance is made in two parts, both L-shaped in cross-section, an upper part *e''* and a lower part *f*, between which the edges *j* of the textile coverings *b b'* are secured, thus dispensing with the wire frame *c*, above referred to. The lower part *f* of this frame has an extended vertical flange which projects down around the side edges of the base D and fits snugly against the same, thus dispensing with the hinged connection above described. The cover B is hinged to the upper part *e''* of the pad-supporting frame.

In Fig. 5 I have shown my improved inking-pad as applied to a self-inking stamp, in which case the pad-supporting frame *e* is hinged at *d'* to the self-inking-stamp frame and provided with a spring-catch *m*, which engages the upper part of said stamp-frame, as shown in dotted lines in said figure.

In some cases it may be found desirable to form a pocket or chamber in the base-block D, in which event the block D is preferably made thicker and mortised out, as shown at F, Figs. 6 and 7, in any desired form, preferably in a form corresponding to the shape and dimensions of the vessel E, which contains the ink. A pocket is thus formed in the base of the inking-pad, which is closed by a door or plate *u*, pivoted to the base D at *y* and slotted at *w* to embrace a headed pin *y'* on the base-block. The door described is a very simple and inexpensive one; but of course any other equivalent device for closing the mouth of the pocket may be employed without departing from the spirit of my invention.

Having now described my invention, what I claim as new, and desire to secure by Letters Patent, is—

1. An inking-pad consisting of layers of felt or other absorbent material entirely surrounded by and inclosed in a textile covering, a surrounding frame, and means for uniting the covering thereto, said frame being hinged to the base, substantially as described.

2. In an inking-pad, a non-absorbent imperforate supporting-base having a movable lid or cover, in combination with an absorbent pad incased in textile fabric, a surrounding frame to which the fabric is united at its edges, said frame being interposed between said base and cover, with the pad resting in contact with said base, substantially as described.

3. In an inking-pad, the combination of the felt or absorbent material *a*, the textile coverings *b b'*, the supporting wire frame *c*, and the metal clamping-frame *e* for binding the edges of the coverings *b* and *b'* on said wire frame, substantially as described.

In testimony whereof I have hereunto set my hand this 16th day of February, 1891.

ALONZO WOODRUFF.

Witnesses:

ANDREW C. MILLER,

J. LAURENE PAUL.