(12) INTERNATIONAL APPLICATION PUBLISHED UNDER THE PATENT COOPERATION TREATY (PCT)

(19) World Intellectual Property Organization
International Bureau

(43) International Publication Date
04 January 2018 (04.01.2018)

WIPO | PCT

(10) International Publication Number
WO 2018/005528 A1

(51) International Patent Classification:
F16K 31/08 (2006.01) *F16K 11/24* (2006.01)
A61H 9/00 (2006.01) *F16K 27/00* (2006.01)
B60N 2/44 (2006.01) *F16K 27/02* (2006.01)
F16K 31/06 (2006.01) *H01F 1/00* (2006.01)
F16K 11/22 (2006.01)

(21) International Application Number:
PCT/US2017/039546

(22) International Filing Date:
27 June 2017 (27.06.2017)

(25) Filing Language: English

(26) Publication Language: English

(30) Priority Data:
62/354,941 27 June 2016 (27.06.2016) US

(71) Applicant: **KONGSBERG AUTOMOTIVE, INC.** [US/US]; 27275 Haggerty Road, Suite 610, Novi, MI 48377 (US).

(72) Inventor: **WHEELER, Douglas, J.**; 26338 Kiltarton Street, Farmington Hills, MI 48334 (US).

(74) Agent: **HAIDLE, Samuel, J.** et al.; Howard & Howard Attorneys, PLLC., 450 West Fourth Street, Royal Oak, MI 48067 (US).

(81) Designated States *(unless otherwise indicated, for every kind of national protection available)*: AE, AG, AL, AM, AO, AT, AU, AZ, BA, BB, BG, BH, BN, BR, BW, BY, BZ, CA, CH, CL, CN, CO, CR, CU, CZ, DE, DJ, DK, DM, DO, DZ, EC, EE, EG, ES, FI, GB, GD, GE, GH, GM, GT, HN, HR, HU, ID, IL, IN, IR, IS, JO, JP, KE, KG, KH, KN, KP, KR, KW, KZ, LA, LC, LK, LR, LS, LU, LY, MA, MD, ME, MG, MK, MN, MW, MX, MY, MZ, NA, NG, NI, NO, NZ,

(54) Title: FLUID ROUTING DEVICE HAVING A VALVE WITH FIRST AND SECOND PERMANENT MAGNETS

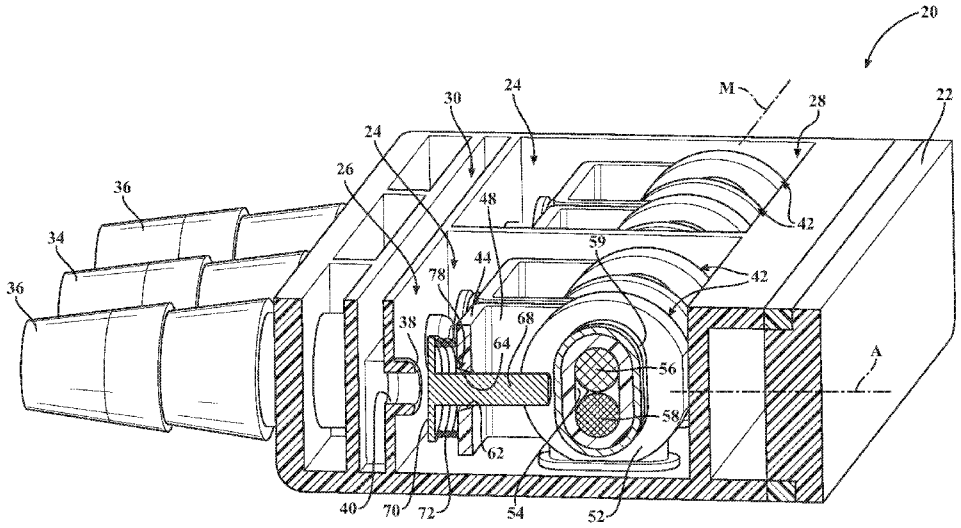

FIG. 6

(57) Abstract: A fluid routing device (20) directs the transportation of a fluid. The fluid routing device includes a housing (22) having an opening (40) with a seat (38), and a valve (42) opening and closing the opening. The valve includes a first permanent magnet (56) having a first magnetic coercivity and a first polarity and a second permanent magnet (58) having a second magnetic coercivity lower than the first magnetic coercivity of the first permanent magnet such that the second permanent magnet has a second polarity capable of switching between a complimentary configuration oriented in a common direction as the first polarity, and a reversed configuration oriented in an opposite direction from the first polarity. A coil (59) surrounds at least the second permanent magnet. The coil is configured to orient the second polarity in the complimentary configuration when electric current passes in a first direction and in the reversed configuration when electric current passes in a second direction.

WO 2018/005528 A1

[Continued on next page]

OM, PA, PE, PG, PH, PL, PT, QA, RO, RS, RU, RW, SA, SC, SD, SE, SG, SK, SL, SM, ST, SV, SY, TH, TJ, TM, TN, TR, TT, TZ, UA, UG, US, UZ, VC, VN, ZA, ZM, ZW.

(84) **Designated States** *(unless otherwise indicated, for every kind of regional protection available)*: ARIPO (BW, GH, GM, KE, LR, LS, MW, MZ, NA, RW, SD, SL, ST, SZ, TZ, UG, ZM, ZW), Eurasian (AM, AZ, BY, KG, KZ, RU, TJ, TM), European (AL, AT, BE, BG, CH, CY, CZ, DE, DK, EE, ES, FI, FR, GB, GR, HR, HU, IE, IS, IT, LT, LU, LV, MC, MK, MT, NL, NO, PL, PT, RO, RS, SE, SI, SK, SM, TR), OAPI (BF, BJ, CF, CG, CI, CM, GA, GN, GQ, GW, KM, ML, MR, NE, SN, TD, TG).

Declarations under Rule 4.17:

— *of inventorship (Rule 4.17(iv))*

Published:

— *with international search report (Art. 21(3))*

— *with amended claims and statement (Art. 19(1))*

FLUID ROUTING DEVICE HAVING A VALVE WITH FIRST AND SECOND PERMANENT MAGNETS

BACKGROUND OF THE INVENTION

1. Field of the Invention

[0001] A fluid routing device for directing the transportation of a fluid.

2. Description of Related Art

[0002] There is a desire within industries implementing fluid transportation to provide for a fluid routing device which can alter the flow path of a fluid. A popular method of altering the flow path of a fluid is through a valve. The valve selectively fluidly couples two fluid cavities through a port. Many techniques have been used to alternate the valve for selectively fluidly coupling the two fluid cavities. One solution in the industry involves a solenoid. The solenoid uses electric current to produce a magnetic field which moves the valve (which is formed of a magnetically permeable material) between an open positions and a closed position. More specifically, the valve is biased toward the closed position. The magnetic field produced by the solenoid moves the valve against the bias to the open position.

[0003] Although effective, continuous electrical energy is required to maintain the solenoid in an energized state in order to retain the valve in the open position. Therefore, there remains a need to provide an improved fluid routing device.

SUMMARY OF THE INVENTION

[0004] The subject invention provides for a fluid routing device for directing the transportation of a fluid. The fluid routing device includes a housing having an opening with a seat disposed about the opening for selectively transporting the fluid therethrough. The fluid routing device further includes a valve coupled to the housing to selectively open and close the opening of the housing. The valve includes a first permanent magnet extending along a magnet axis between a

pair of ends. The first permanent magnet has a first magnetic coercivity and a first polarity that is fixed along the magnet axis. The valve further includes a second permanent magnet extending along the magnet axis between a pair of ends. The second permanent magnet has a second magnetic coercivity lower than the first magnetic coercivity of the first permanent magnet such that the second permanent magnet has a second polarity capable of switching along the magnet axis. More specifically, the second polarity is capable of switching between a complimentary configuration oriented in a common direction as the first polarity of the first permanent magnet, and a reversed configuration oriented in an opposite direction from the first polarity of the first permanent magnet.

[0005] The valve further includes a coil surrounding at least the second permanent magnet. The coil comprises an electrically conductive material configured to receive an electric current in one of a first direction and a second direction, opposing the first direction. The coil is configured to orient the second polarity in the complimentary configuration when electric current passes in the first direction and the coil configured to orient the second polarity in the reversed configuration when electric current passes in the second direction.

[0006] The valve further includes a plunger movable along a plunger axis between a closed position in which the plunger abuts the seat to close the opening, and an open position in which the plunger is spaced from the seat to open the opening. The plunger is positioned in the closed position when the second polarity of the second permanent magnet is in one of the complimentary and reversed configurations. The plunger is positioned in the open position when the second polarity of the second permanent magnet is in the other one of the complimentary and reversed configurations.

[0007] The subject invention provides the advantage of only requiring electric current to change states of the magnetic circuit (i.e., to orient the second polarity of the second permanent

magnet), and not to impart electromagnetic force on the plunger to maintain the open and closed positions, which provides the benefit of reduced power consumption.

BRIEF DESCRIPTION OF THE DRAWINGS

[0008] Advantages of the subject invention will be readily appreciated as the same becomes better understood by reference to the following detailed description when considered in connection with the accompanying drawings.

[0009] Figure 1 is a perspective view of a fluid routing device having a plurality of valves.

[0010] Figure 2 is a perspective view of a valve including a bobbin, a coil, a plunger, a biasing member, and a frame within an interior of the housing.

[0011] Figure 3 is a first perspective view of the valve showing first and second permanent magnets parallel to one another.

[0012] Figure 4 is a second perspective view of the valve showing the first and second permanent magnets parallel to one another.

[0013] Figure 5 is a cross-sectional, perspective view of the fluid routing device with the plunger of the valve in a closed position.

[0014] Figure 6 is a cross-sectional, perspective view of the fluid routing device with the plunger in an open position.

[0015] Figure 7 is a perspective view of the valve, with the plunger having a body and a flange.

[0016] Figure 8 is an exploded view of the valve shown in Figure 7.

[0017] Figure 9 is a cross-sectional perspective view of the valve shown in Figure 7.

[0018] Figure 10 is cross-sectional view of a fluid routing device having the valve shown in Figure 7, with plunger in the closed position.

[0019] Figure 11 is cross-sectional view of the fluid routing device having the valve shown in Figure 7, with plunger in the open position.

[0020] Figure 12 is an elevational view of another fluid routing device.

[0021] Figure 13 is a cross-sectional view of the fluid routing device shown in Figure 12, with the first and second permanent magnets linearly aligned, the first permanent magnet disposed within a cavity of the plunger, and the plunger in the closed position.

[0022] Figure 14 is a cross-sectional view of the fluid routing device shown in Figure 12, with the plunger in the open position.

[0023] Figure 15 is a schematic view of the fluid routing device showing the first and second permanent magnets linearly aligned, the plunger disposed within a magnet bore of the first permanent magnet, and the plunger in the open position.

[0024] Figure 16 is a schematic view of the fluid routing device shown in Figure 15, with the plunger in the open position.

[0025] Figure 17 is a schematic view of the fluid routing device with the housing having a pair of openings and showing the first and second permanent magnets linearly aligned, the plunger disposed within the magnet bore of the first permanent magnet, and with the plunger in the open position relative to one of the pair of openings and the plunger in the closed position relative to the other one of the pair of openings.

DETAILED DESCRIPTION OF THE INVENTION

[0026] Referring to the Figures, wherein like numerals indicate like or corresponding parts throughout the several views, a fluid routing device 20 for directing the transportation of a fluid is generally shown in Figure 1. The fluid routing device 20 is typically disposed within a vehicle for transporting at least one occupant. The vehicle is further defined as a passenger car, a truck, or any other configuration for providing transportation. The vehicle includes at least one seat disposed within the vehicle for supporting the occupant(s) with the seat having a cell capable of inflating and deflating. The fluid routing device 20 typically directs the transportation of the fluid

into and out of the cell for inflating and deflating the cell. Inflation and deflation of the cell varies the support given through the seat to the occupant. The fluid is typically a gas. However, it is to be appreciated that the fluid can be a liquid or any other configuration transportable to and from the cell.

[0027] It is to be appreciated that application of the fluid routing device 20 is not limited to within the vehicle. Furthermore, the cell is not limited to application within the seat. As such, the fluid routing device 20 can be disposed in any configuration for transporting the fluid to any configuration of the cell.

[0028] As shown in Figures 1 and 2, the fluid routing device 20 includes a housing 22. The housing 22 may define an interior 24. The interior 24 may have a first section 26 and a second section 28 fluidly separated from one another; however, one having skill in art will appreciate that the interior 24 may have any number of sections. The housing 22 may further define at least one corridor 30. The housing 22 may include a plurality of nozzles 34, 36. The nozzles 34, 36 may be fluidly coupled with the at least one corridor 30. The nozzles 34, 36 may extend outwardly from the housing 22 substantially parallel to one another.

[0029] As shown in Figure 1, the plurality of nozzles 34, 36 may include at least one inlet nozzle 34 and at least one fill nozzle 36 spaced from each other. The at least one fill nozzle 36 transports air between the cell and the fluid routing device 20 for inflating and deflating the cell. The at least one inlet nozzle 34 draws air into the fluid routing device 20 for inflating the cell. The housing 22 may further define an exhaust port for deflating the cell.

[0030] As shown in Figures 5, 6, 10, 11 and 13-17, the housing 22 has an opening 40 with a seat 38 disposed about the opening 40 for selectively transporting the fluid therethrough. More specifically, the seat 38 may fluidly couple the at least one corridor 30 and the interior 24 of the housing 22. The opening 40 may be a plurality of openings 40 each fluidly coupling the at least

one corridor 30 and the interior 24 of the housing 22. For example, the plurality of openings 40 may be four openings 40, with two of the openings 40 fluidly coupling the at least one corridor 30 with the first section 26 of the interior 24 and with two of the openings 40 fluidly coupling the at least one corridor 30 with the second section 28 of the interior 24.

[0031] The at least one corridor 30, plurality of nozzles 34, 36, and the openings 40 as shown in the Figures are schematic in nature. One having skill in the art will appreciate that the at least one corridor 30, plurality of nozzles 34, 36, and the openings 40 may have any suitable configuration for transporting the fluid.

[0032] As shown in Figures 1, 5, 6, 10, 11, and 13-17, the fluid routing device 20 further includes a valve 42 coupled to the housing 22 to selectively open and close the opening 40 of the housing 22. The valve 42 includes a first permanent magnet 56 extending along a magnet axis M between a pair of ends 57. The first permanent magnet 56 has a first magnetic coercivity and a first polarity that is fixed along the magnet axis M. The valve 42 further includes a second permanent magnet 58 extending along the magnet axis M between a pair of ends 60. The second permanent magnet 58 has a second magnetic coercivity lower than the first magnetic coercivity of the first permanent magnet 56 such that the second permanent magnet 58 has a second polarity capable of switching along the magnet axis M. More specifically, the second polarity is capable of switching between a complimentary configuration oriented in a common direction as the first polarity of the first permanent magnet 56, and a reversed configuration oriented in an opposite direction from the first polarity of the first permanent magnet 56.

[0033] The valve 42 further includes a coil 59 surrounding at least the second permanent magnet 58. The coil 59 comprises an electrically conductive material configured to receive an electric current in one of a first direction and a second direction, opposing the first direction. The coil 59 is configured to orient the second polarity in the complimentary configuration when

electric current passes in the first direction and the coil 59 configured to orient the second polarity in the reversed configuration when electric current passes in the second direction.

[0034] The valve 42 further includes a plunger 66 movable along a plunger axis A between a closed position (as shown in Figures 5, 10, 13, 16, and 17) in which the plunger 66 abuts the seat 38 to close the opening 40, and an open position (as shown in Figures 6, 11, 14, 15, and 17) in which the plunger 66 is spaced from the seat 38 to open the opening 40. The plunger 66 is positioned in the closed position when the second polarity of the second permanent magnet 58 is in one of the complimentary and reversed configurations. The plunger 66 is positioned in the open position when the second polarity of the second permanent magnet 58 is in the other one of the complimentary and reversed configurations.

[0035] The valve 42 may be disposed within the interior 24. The valve 42 may be a plurality of valves 42 disposed within the interior 24. For example, as shown in the Figures, the plurality of valves 42 may be four valves 42, with two of the valves 42 fluidly disposed in the first section 26 of the interior 24 and with two of the valves 42 disposed in the second section 28 of the interior 24. Each of the plurality of valves 42 individually correspond with each of the plurality of openings 40 of the housing 22. One having skill in the art will appreciate that the fluid routing device 20 may have any suitable number of openings 40 and corresponding valves 42.

[0036] As shown in Figures 3, 4, and 9-11, the first and second permanent magnets 56, 58 may extend parallel to one another along the magnet axis M. The valve 42 may further include a bobbin 52 formed of non-magnetically permeable material. The bobbin 52 may define a bore 54 therethrough. Both of the first and second permanent magnets 56, 58 may extend longitudinally through the bore 54.

[0037] As shown in Figures 3, 4, 9-11, and 13-17 the bobbin 52 (as well as the first and second permanent magnets 56, 58) is surrounded by the coil 59. The coil 59 is comprised of a single

strand of an electrically conductive material (commonly copper, but may be any suitable metallic material) which is wound around the bobbin 52. The coil 59 is electrically coupled to a controller, which is capable of transmitting an electric current through the coil 59.

[0038] The first and second permanent magnets 56, 58 may be partially disposed within the bore 54, such that the first and second permanent magnets 56, 58 extend outside the bore 54 at opposing ends. As shown in Figures 3 and 4, the valve 42 may include a frame 44. The frame 44 may include pair of legs 48. The legs 48 may extend to an engagement surface 50. The engagement surfaces of the legs 48 may be configured to abut the first and second permanent magnets 56, 58. The abutment of the frame 44 with first and second permanent magnets 56, 58 creates a flux path through the legs 48 of the frame 44 for the magnetic field produced by the first and second permanent magnets 56, 58. Moreover, the frame 44 may be fixed to the first and second permanent magnets 56, 58.

[0039] The frame 44 may be comprised of a magnetically permeable material, such as steel. The frame 44 may abut each of the pair of ends 57, 60 of both of the first and second permanent magnets 56, 58 to partially define flux circuit for the first and second permanent magnets 56, 58. As shown in Figures 3, 4, and 9. The frame 44 may include the pair of legs 48 abutting each of the pair of ends 57, 60 of both of the first and second permanent magnets 56, 58 and extending substantially parallel to one another transverse to the magnet axis M. The bobbin 52 may be disposed between the legs 48, with the bore 54 opening toward each of the legs 48.

[0040] The plunger 66 may at least partially be comprised of a magnetically permeable material, such as steel. The plunger 66 may be spaced from the frame 44 to define an air gap 78 therebetween, with the frame 44 and the plunger 66 defining the flux circuit across the air gap 78.

[0041] More specifically, in one configuration, the valve 42 further includes a plate 46 extending between and coupled with the pair of legs 48, as shown in Figures 2-6. The

legs 48 may be unitary with the plate 46 (as shown in the Figures), or may be assembled to the plate 46 by welding, bolts, or any other suitable fastening device. Each of the legs 48 may extend from the plate 46 to an engagement surface 50 for abutting the first and second permanent magnets 56, 58. The plate 46 defines a hole 64 along the plunger axis A for accepting the plunger 66 therein. The air gap 78 between the frame 44 and the plunger 66 is defined within the hole 64 between the frame 44 and the plunger 66. More specifically, the plate 46 of the frame 44 may have a hole surface 62 defining the hole 64 along the plunger axis A. The plunger 66 may be movably disposed within the hole 64. The plunger axis A may be substantially parallel with the legs 48. Moreover, the plunger axis A may be substantially perpendicular to the longitudinal orientation of the first and second permanent magnets 56, 58. One having skill in the art will appreciate that the plunger axis A may have any suitable orientation. The hole surface 62 may have a taper. More specifically, the hole surface 62 may be angled such that the hole surface 62 is transverse to the plunger axis A. The taper of the hole surface 62 facilitates the movement of the plunger 66. More specifically, the taper of the hole surface 62 directs the flux path of the first and second permanent magnets 56, 58. Changing the taper of the hole surface 62 alters the amount of magnetic force that the first and second permanent magnets 56, 58 exert on the plunger 66.

[0042] In another configuration, the plunger 66 includes a body 74 extending along the plunger axis A and a flange 76 transverse to the body 74 and extending in opposing directions toward the pair of legs 48, with the air gap 78 between the frame 44 and the plunger 66 further defined as a pair of air gaps 78 between the flange 76 and one of the pair of ends of each of the legs 48, as shown in Figures 7-11. More specifically, the pair of legs 48 may extend substantially parallel to the plunger axis A and the flange 76 may extend substantially perpendicular to the plunger axis A. The pair of legs 48 may be a common length such that the pair of air gaps 78 are substantially

equal. The body 74 and the flange 76 may be a plurality of components coupled to one another by press fit, mechanical fastener, or any other suitable coupling. Alternatively, the body 74 and the flange 76 may be an integral component. The flange 76 may be comprised of a magnetically permeable material, such as steel. Alternatively, both the body 74 and the flange 76 may be comprised of a magnetically permeable material.

[0043] As shown in Figures 7-11, the valve 42 may further include a diaphragm 80 disposed between the plunger 66 and the frame 44. The diaphragm 80 fluidly separates portions of the housing 22 for directing the flow of the fluid from the opening 40. For example, the diaphragm 80 may fluidly separate the interior 24 of the housing 22. One having skill in the art will appreciate that the diaphragm 80 may fluidly separate any portion of the housing 22.

[0044] The plunger 66 may include an elongated portion 68 extending longitudinally along the plunger axis A between a pair of ends, and an abutment portion 70 disposed at one end of the elongated portion 68 and configured to abut the seat 38 about the opening 40 of the housing 22. The elongated portion 68 and the abutment portion 70 may be integral such that the elongated and abutment portions 68, 70 are a unitary component.

[0045] The plunger 66 is movable between the closed position and the open position. In the closed position, the plunger 66 abuts the seat 38 and closes the opening 40. The abutment of the plunger 66 with the seat 38 prevents the transportation of fluid between the at least one corridor 30 and the interior 24. In the open position, the plunger 66 is spaced from the seat 38 and opens the opening 40. The spacing of the plunger 66 from the seat 38 permits transport of fluid between the at least one corridor 30 and the interior 24.

[0046] The term "permanent magnet" refers to a magnet that retains its magnetic properties in the absence of an inducing field or current. As described above, the second permanent magnet 58 is constructed of a material having a magnetic coercivity (i.e., a measure of the ability of a

material to withstand an external magnetic field without becoming demagnetized) which is lower than that of the first permanent magnet 56. As such, the second permanent magnet 58 is capable of switching (reversing) polarity while the first permanent magnet 56 is resistant switching polarity. For example, the second permanent magnet 58 may be an AlNiCo magnet which may be comprised of an alloy of aluminum, nickel, and cobalt. The first permanent magnet 56 may be a neodymium magnet which may be comprised of an alloy of neodymium, iron and boron. One having skill in the art will appreciate that the first and second permanent magnets 56, 58 may be comprised of any suitable magnetic material.

[0047] The plunger 66 may be disposed in the closed position when the second polarity is in the reversed configuration, with the orientation of the second polarity in the opposite direction from the first polarity of the first permanent magnet 56 resulting in a magnetic flux produced by each of the first and second permanent magnets 56, 58 that substantially cancel out one another. Because the magnetic flux of the first and second permanent magnets 56, 58 substantially cancel out one another, the first and second permanent magnets 56, 58 produce almost no attractive or repulsive force on the plunger 66. The prevent the plunger 66 from freely moving between the open and closed positions, the valve 42 may further include a biasing member 72 engaging the plunger 66 and biasing the plunger 66 to the closed position to retain the plunger 66 in the closed position when the second polarity is in the complimentary configuration. More specifically, as shown in Figures 2, 3, 5, and 6, the biasing member 72 may engage each of the plate 46 and the plunger 66 to bias the plunger 66. Alternatively, the biasing member 72 may engage each of the diaphragm 80 and the plunger 66 to bias the plunger 66, as shown in Figures 10 and 11. One having skill in the art will appreciate that the biasing member 72 may engage any component opposite the plunger 66 which allows for compression of the biasing member 72.

[0048] The plunger 66 may be disposed in the open position when the second polarity is in the complimentary configuration, with the orientation of the second polarity in the common direction as the first polarity of the first permanent magnet 56 resulting in a magnetic flux produced by each of the first and second permanent magnets 56, 58 which compound one another to produce a magnetic field that attracts the plunger 66 toward the permanent magnets. The magnetic field may be great enough to overcome the bias of the biasing member 72 to move the plunger 66 to the open position.

[0049] One having skill in the art will appreciate that the opposite may be true. More specifically, the plunger 66 may be disposed in the open position when the second polarity is in the reversed configuration and the plunger 66 may be disposed in the closed configuration when the second polarity is in the complimentary configuration.

[0050] Alternatively, the valve 42 may move the plunger 66 between the first and second permanent magnets 56, 58 by attraction and repulsion between the first and second permanent magnets 56, 58. As shown in Figures 13-17, the first and second permanent magnets 56, 58 may be linearly aligned along the magnet axis M, with one of the first and second permanent magnets 56, 58 being stationary and the other one of the first and second permanent magnets 56, 58 being movable. Said differently, the first and second permanent magnets 56, 58 may be aligned end to end such that the ends 57, 60 of the magnets face one another.

[0051] The plunger 66 may be coupled to the one of the first and second permanent magnets 56, 58 that is movable such that the plunger 66 and the one of the first and second permanent magnets 56, 58 move together as a unit. More specifically, the first permanent magnet 56 may be movable and the second permanent magnet 58 may be stationary, with the plunger 66 fixed with the first permanent magnet 56 such that the plunger 66 and the first permanent magnet 56 move together as a unit. The second permanent magnet 58 may be fixed within the bore 54 of the

bobbin 52, with the bobbin 52 fixed to the housing 22. As such, the second permanent magnet 58 may be fixed to the housing 22 and is therefore stationary.

[0052] The plunger axis A and the magnet axis M may be linearly aligned. As such, the movement of the plunger 66 along the plunger axis A also occurs along the magnet axis M. In one embodiment, the plunger 66 defines a cavity 82 along the plunger axis A, with the first permanent magnet 56 at least partially disposed within the cavity 82 and fixed with the plunger 66, as shown in Figures 13 and 14. More specifically, both the cavity 82 and the first permanent magnet 56 may have a cylindrical configuration such that the first permanent magnet 56 may be press fit into the cavity 82 of the plunger 66. In another embodiment, the first permanent magnet 56 defines a magnet bore 84 along the magnet axis M, with the plunger 66 at least partially disposed within the magnet bore 84 and fixed with the first permanent magnet 56, as shown in Figures 15-17. More specifically, both the magnet bore 84 and the plunger 66 may have a cylindrical configuration such that the plunger 66 may be press fit into the magnet bore 84 of the first permanent magnet 56. One having skill in the art will appreciate that the plunger 66 and the first permanent magnet 56 may be coupled to one another in any suitable manner and in any suitable configuration.

[0053] As shown in Figure 17, the housing 22 may have a pair of openings 40 aligned with plunger axis A and spaced from one another. In such a configuration, the plunger 66 may be configured such that opposite ends of the plunger 66 may selectively open and close the pair of openings 40. More specifically, when one of the ends of the plunger 66 is in the open position with its respective opening 40, the other end of the plunger 66 is in the closed position with its respective opening 40.

[0054] The second polarity having the complimentary configuration oriented in the common direction as the first polarity of the first permanent may facilitate attraction between the first and

second permanent magnets 56, 58 and movement of the first permanent magnet 56 toward the second permanent magnet 58. More specifically, with the second polarity oriented in the common direction, the opposing poles of the first and second permanent magnets 56, 58 face one another (i.e., a north pole of one of the permanent magnets faces a south pole of the other one of the permanent magnets). As is well known in the art, opposing poles are attracted to one another. Therefore, the first permanent magnet 56 is attracted to and moves toward the second permanent magnet 58 when the second polarity has the complimentary configuration.

[0055] The second polarity having the reversed configuration oriented in the opposite direction from the first polarity of the first permanent magnet 56 may facilitate repulsion between the first and second permanent magnets 56, 58 and movement of the first permanent magnet 56 away from the second permanent magnet 58. More specifically, with the second polarity oriented in the opposite direction, the common poles of the first and second permanent magnets 56, 58 face one another (i.e., a north pole of one of the permanent magnets faces a north pole of the other one of the permanent magnets). As is well known in the art, common poles repel one another. Therefore, the first permanent magnet 56 is attracted to an moves toward the second permanent magnet 58 when the second polarity has the complimentary configuration.

[0056] As shown in Figures 13-17, the closed position of the plunger 66 may correspond with the second polarity of the second permanent magnet 58 having the reversed configuration and the open position of the plunger 66 corresponds with the second polarity of the second permanent magnet 58 having the complimentary configuration. Alternatively, as shown in Figure 17, the closed position of the plunger 66 may correspond with the second polarity of the second permanent magnet 58 having the complimentary configuration and the open position of the plunger 66 corresponds with the second polarity of the second permanent magnet 58 having the reversed configuration.

[0057] In all of the above embodiments, the second polarity of the second permanent magnet 58 is capable of switching along the magnet axis M between the complimentary configuration and the reversed configuration. Furthermore, in all of the above embodiments, movement of the plunger 66 between the open and closed positions is effectuated by the switching of the second permanent magnet 58.

[0058] To transition the second polarity of the second permanent magnet 58 from the reversed configuration to the complimentary configuration, electric current passes in the first direction through the coil 59 which produces a first direction magnetic field that orients the second polarity in the complimentary configuration.

[0059] To transition the second polarity of the second permanent magnet 58 from the complimentary configuration to the reversed configuration, electric current passes in the second direction through the coil 59 which produces a second direction magnetic field that orients the second polarity in the complimentary configuration. Once the second permanent magnet 58 transitions to the complimentary configuration or the reversed configuration, the second permanent magnet 58 will maintain the complimentary configuration or the reversed configuration. Thus, electric current may be removed from the coil 59 after the second permanent magnet 58 transitions to the complimentary configuration or the reversed configuration. Therefore, electric current is only needed to transition the second permanent magnet 58, providing the benefit of reducing power consumption needed to maintain the plunger 66 of the valve 42 in either open position or the closed position.

[0060] The invention has been described in an illustrative manner, and it is to be understood that the terminology which has been used is intended to be in the nature of words of description rather than of limitation. As is now apparent to those skilled in the art, many modifications and variations of the subject invention are possible in light of the above teachings. It is, therefore, to

be understood that within the scope of the appended claims, wherein reference numerals are merely for convenience and are not to be in any way limiting, the invention may be practiced otherwise than as specifically described.

CLAIMS

What is claimed is:

1. A fluid routing device for directing the transportation of a fluid, said fluid routing device comprising:

a housing having an opening with a seat disposed about said opening for selectively transporting the fluid therethrough; and

a valve coupled to said housing to selectively open and close said opening of said housing; said valve comprising:

a first permanent magnet extending along a magnet axis between a pair of ends, with said first permanent magnet having a first magnetic coercivity and a first polarity that is fixed along said magnet axis;

a second permanent magnet extending along said magnet axis between a pair of ends, with said second permanent magnet having a second magnetic coercivity lower than said first magnetic coercivity of said first permanent magnet such that said second permanent magnet has a second polarity capable of switching along said magnet axis between a complimentary configuration oriented in a common direction as said first polarity of said first permanent magnet, and a reversed configuration oriented in an opposite direction from said first polarity of said first permanent magnet; and

a coil surrounding at least said second permanent magnet and comprising an electrically conductive material configured to receive an electric current in one of a first direction and a second direction, opposing said first direction, with said coil configured to orient said second polarity in said complimentary configuration when electric current passes in said first direction and said coil configured to orient said second polarity in said reversed configuration when electric current passes in said second direction; and

a plunger movable along a plunger axis between a closed position in which said plunger abuts said seat to close said opening, and an open position in which said plunger is spaced from said seat to open said opening, with said plunger positioned in said closed position when said second polarity of said second permanent magnet is in one of said complimentary and reversed configurations, and with said plunger positioned in said open position when said second polarity of said second permanent magnet is in the other one of said complimentary and reversed configurations.

2. The fluid routing device as set forth in claim 1, wherein said first and second permanent magnets extend parallel to one another along said magnet axis.

3. The fluid routing device as set forth in claim 1, wherein said valve further includes a frame comprised of a magnetically permeable material and abutting each of said pair of ends of both of said first and second permanent magnets to partially define a flux circuit for said first and second permanent magnets.

4. The fluid routing device as set forth in claim 3, wherein said plunger is at least partially comprised of a magnetically permeable material and is spaced from said frame to define an air gap therebetween, with said frame and said plunger defining said flux circuit across said air gap.

5. The fluid routing device as set forth in claim 4, wherein said frame includes pair of legs abutting each of said pair of ends of both of said first and second permanent magnets and extending substantially parallel to one another transverse to said magnet axis.

6. The fluid routing device as set forth in claim 5, wherein said valve further includes a plate extending between and coupled with said pair of legs, with said plate defining a hole along said plunger axis for accepting said plunger therein, and with said air gap between said frame and said plunger defined within said hole between said frame and said plunger.

7. The fluid routing device as set forth in claim 5, wherein said plunger includes a body extending along said plunger axis and a flange transverse to said body and extending in opposing directions toward said pair of legs, with said air gap between said frame and said plunger further defined as a pair of air gaps between said flange and one of said pair of ends of each of said legs.

8. The fluid routing device as set forth in claim 1, wherein said plunger is disposed in said closed position when said second polarity is in said reversed configuration, with the orientation of said second polarity in said opposite direction from said first polarity of said first permanent magnet resulting in a magnetic flux produced by each of said first and second permanent magnets that substantially cancel out one another.

9. The fluid routing device as set forth in claim 8, wherein said valve further includes a biasing member engaging said plunger, and biasing said plunger to said closed position to retain said plunger in said closed position when said second polarity is in said complimentary configuration.

10. The fluid routing device as set forth in claim 1, wherein said plunger is disposed in said open position when said second polarity is in said complimentary configuration, with the orientation of said second polarity in said common direction as said first polarity of said first permanent magnet resulting in a magnetic flux produced by each of said first and second permanent magnets which compound one another to produce a magnetic field that attracts said plunger toward said permanent magnets.

11. The fluid routing device as set forth in claim 1, wherein said first and second permanent magnets are linearly aligned along said magnet axis, with one of said first and second permanent magnets being stationary and the other one of said first and second permanent magnets being movable.

12. The fluid routing device as set forth in claim 11, wherein said plunger is coupled to said one of said first and second permanent magnets that is movable such that said plunger and said one of said first and second permanent magnets move together as a unit.

13. The fluid routing device as set forth in claim 12, wherein said first permanent magnet is movable and said second permanent magnet is stationary, with said plunger fixed with said first permanent magnet such that said plunger and said first permanent magnet move together as a unit.

14. The fluid routing device as set forth in claim 1, wherein said plunger axis and said magnet axis are linearly aligned.

15. The fluid routing device as set forth in claim 14, wherein said plunger defines a cavity along said plunger axis, with said first permanent magnet at least partially disposed within said cavity and fixed with said plunger.

16. The fluid routing device as set forth in claim 14, wherein said first permanent magnet defines a magnet bore along said magnet axis, with said plunger at least partially disposed within said magnet bore and fixed with said first permanent magnet.

17. The fluid routing device as set forth in claim 13, wherein said second polarity having said complimentary configuration oriented in said common direction as said first polarity of said first permanent facilitates attraction between said first and second permanent magnets and movement of said first permanent magnet toward said second permanent magnet.

18. The fluid routing device as set forth in claim 13, wherein said second polarity having said reversed configuration oriented in said opposite direction from said first polarity of said first permanent magnet facilitates repulsion between said first and second permanent magnets and movement of said first permanent magnet away from said second permanent magnet.

19. The fluid routing device as set forth in claim 1, wherein said closed position of said plunger corresponds with said second polarity of said second permanent magnet having said complimentary configuration and said open position of said plunger corresponds with said second polarity of said second permanent magnet having said reversed configuration.

20. The fluid routing device as set forth in claim 1, wherein said closed position of said plunger corresponds with said second polarity of said second permanent magnet having said reversed configuration and said open position of said plunger corresponds with said second polarity of said second permanent magnet having said complimentary configuration.

21. The fluid routing device as set forth in claim 1, wherein said first permanent magnet is comprised of an alloy of neodymium, iron and boron.

22. The fluid routing device as set forth in claim 1, wherein said second permanent magnet is comprised of an alloy of aluminum, nickel, and cobalt.

23. A valve for use with a housing having an opening with a seat disposed about said opening for selectively transporting a fluid therethrough, with said valve coupled to the housing and selectively opening and closing the opening of the housing; said valve comprising:

a first permanent magnet extending along a magnet axis between a pair of ends, with said first permanent magnet having a first magnetic coercivity and a first polarity that is fixed along said magnet axis;

a second permanent magnet extending along said magnet axis between a pair of ends, with said second permanent magnet having a second magnetic coercivity lower than said first magnetic coercivity of said first permanent magnet such that said second permanent magnet has a second polarity capable of switching along said magnet axis between a complimentary configuration oriented in a common direction as said first polarity of said first permanent magnet,

and a reversed configuration oriented in an opposite direction from said first polarity of said first permanent magnet;

a coil surrounding at least said second permanent magnet and comprising an electrically conductive material configured to receive an electric current in one of a first direction and a second direction, opposing said first direction, with said coil configured to orient said second polarity in said complimentary configuration when electric current passes in said first direction and said coil configured to orient said second polarity in said reversed configuration when electric current passes in said second direction; and

a plunger movable along a plunger axis between a closed position for abutting said plunger with the seat to close the opening, and an open position for spacing said plunger from the seat to open the opening, with said plunger positioned in said closed position when said second polarity of said second permanent magnet is in one of said complimentary and reversed configurations, and with said plunger positioned in said open position when said second polarity of said second permanent magnet is in the other one of said complimentary and reversed configurations.

AMENDED CLAIMS
received by the International Bureau on 28 November 2017 (28.11.2017)

CLAIMS

What is claimed is:

1. A fluid routing device for directing the transportation of a fluid, said fluid routing device comprising:

a housing having an opening with a seat disposed about said opening for selectively transporting the fluid therethrough; and

a valve coupled to said housing to selectively open and close said opening of said housing; said valve comprising:

a first permanent magnet extending along a magnet axis between a pair of ends, with said first permanent magnet having a first magnetic coercivity and a first polarity that is fixed along said magnet axis;

a second permanent magnet extending along said magnet axis between a pair of ends, with said second permanent magnet having a second magnetic coercivity lower than said first magnetic coercivity of said first permanent magnet such that said second permanent magnet has a second polarity capable of switching along said magnet axis between a complimentary configuration oriented in a common direction as said first polarity of said first permanent magnet, and a reversed configuration oriented in an opposite direction from said first polarity of said first permanent magnet; and

a coil surrounding at least said second permanent magnet and comprising an electrically conductive material configured to receive an electric current in one of a first direction and a second direction, opposing said first direction, with said coil configured to orient said second polarity in said complimentary configuration when electric current passes in said first direction and said coil configured to orient said second polarity in said reversed configuration when electric current passes in said second direction; and

a plunger movable along a plunger axis between a closed position in which said plunger abuts said seat to close said opening, and an open position in which said plunger is spaced from said seat to open said opening, with said plunger positioned in said closed position when said second polarity of said second permanent magnet is in one of said complimentary and reversed configurations, and with said plunger positioned in said open position when said second polarity of said second permanent magnet is in the other one of said complimentary and reversed configurations;

wherein said plunger is disposed in said open position when said second polarity is in said complimentary configuration, with the orientation of said second polarity in said common direction as said first polarity of said first permanent magnet resulting in a magnetic flux produced by each of said first and second permanent magnets which compound one another to produce a magnetic field that attracts said plunger toward said permanent magnets, and said plunger is disposed in said closed position when said second polarity is in said reversed configuration, with the orientation of said second polarity in said opposite direction from said first polarity of said first permanent magnet resulting in a magnetic flux produced by each of said first and second permanent magnets that substantially cancel out one another.

2. The fluid routing device as set forth in claim 1, wherein said first and second permanent magnets extend parallel to one another along said magnet axis.

3. The fluid routing device as set forth in claim 1, wherein said valve further includes a frame comprised of a magnetically permeable material and abutting each of said pair of ends of both of said first and second permanent magnets to partially define a flux circuit for said first and second permanent magnets.

4. The fluid routing device as set forth in claim 3, wherein said plunger is at least partially comprised of a magnetically permeable material and is spaced from said frame to define an air gap therebetween, with said frame and said plunger defining said flux circuit across said air gap.

5. The fluid routing device as set forth in claim 4, wherein said frame includes pair of legs abutting each of said pair of ends of both of said first and second permanent magnets and extending substantially parallel to one another transverse to said magnet axis.

6. The fluid routing device as set forth in claim 5, wherein said valve further includes a plate extending between and coupled with said pair of legs, with said plate defining a hole along said plunger axis for accepting said plunger therein, and with said air gap between said frame and said plunger defined within said hole between said frame and said plunger.

7. The fluid routing device as set forth in claim 5, wherein said plunger includes a body extending along said plunger axis and a flange transverse to said body and extending in opposing directions toward said pair of legs, with said air gap between said frame and said plunger further defined as a pair of air gaps between said flange and one of said pair of ends of each of said legs.

8. (Cancelled)

9. The fluid routing device as set forth in claim 1, wherein said valve further includes a biasing member engaging said plunger, and biasing said plunger to said closed position to retain said plunger in said closed position when said second polarity is in said complimentary configuration.

10. (Cancelled)

11. (Cancelled)

12. The fluid routing device as set forth in claim 24, wherein said plunger is coupled to said one of said first and second permanent magnets that is movable such that said plunger and said one of said first and second permanent magnets move together as a unit.

13. The fluid routing device as set forth in claim 12, wherein said first permanent magnet is movable and said second permanent magnet is stationary, with said plunger fixed with said first permanent magnet such that said plunger and said first permanent magnet move together as a unit.

14. The fluid routing device as set forth in claim 24, wherein said plunger axis and said magnet axis are linearly aligned.

15. The fluid routing device as set forth in claim 14, wherein said plunger defines a cavity along said plunger axis, with said first permanent magnet at least partially disposed within said cavity and fixed with said plunger.

16. The fluid routing device as set forth in claim 14, wherein said first permanent magnet defines a magnet bore along said magnet axis, with said plunger at least partially disposed within said magnet bore and fixed with said first permanent magnet.

17. The fluid routing device as set forth in claim 13, wherein said second polarity having said complimentary configuration oriented in said common direction as said first polarity of said first permanent facilitates attraction between said first and second permanent magnets and movement of said first permanent magnet toward said second permanent magnet.

18. The fluid routing device as set forth in claim 13, wherein said second polarity having said reversed configuration oriented in said opposite direction from said first polarity of said first permanent magnet facilitates repulsion between said first and second permanent

magnets and movement of said first permanent magnet away from said second permanent magnet.

19. (Cancelled)

20. The fluid routing device as set forth in claim 1, wherein said closed position of said plunger corresponds with said second polarity of said second permanent magnet having said reversed configuration and said open position of said plunger corresponds with said second polarity of said second permanent magnet having said complimentary configuration.

21. The fluid routing device as set forth in claim 1, wherein said first permanent magnet is comprised of an alloy of neodymium, iron and boron.

22. The fluid routing device as set forth in claim 1, wherein said second permanent magnet is comprised of an alloy of aluminum, nickel, and cobalt.

23. A valve for use with a housing having an opening with a seat disposed about said opening for selectively transporting a fluid therethrough, with said valve coupled to the housing and selectively opening and closing the opening of the housing; said valve comprising:

a first permanent magnet extending along a magnet axis between a pair of ends, with said first permanent magnet having a first magnetic coercivity and a first polarity that is fixed along said magnet axis;

a second permanent magnet extending along said magnet axis between a pair of ends, with said second permanent magnet having a second magnetic coercivity lower than said first magnetic coercivity of said first permanent magnet such that said second permanent magnet has a second polarity capable of switching along said magnet axis between a complimentary configuration oriented in a common direction as said first polarity of said first permanent

magnet, and a reversed configuration oriented in an opposite direction from said first polarity of said first permanent magnet;

a coil surrounding at least said second permanent magnet and comprising an electrically conductive material configured to receive an electric current in one of a first direction and a second direction, opposing said first direction, with said coil configured to orient said second polarity in said complimentary configuration when electric current passes in said first direction and said coil configured to orient said second polarity in said reversed configuration when electric current passes in said second direction; and

a plunger movable along a plunger axis between a closed position for abutting said plunger with the seat to close the opening, and an open position for spacing said plunger from the seat to open the opening, with said plunger positioned in said closed position when said second polarity of said second permanent magnet is in one of said complimentary and reversed configurations, and with said plunger positioned in said open position when said second polarity of said second permanent magnet is in the other one of said complimentary and reversed configurations;

wherein said plunger is disposed in said open position when said second polarity is in said complimentary configuration, with the orientation of said second polarity in said common direction as said first polarity of said first permanent magnet resulting in a magnetic flux produced by each of said first and second permanent magnets which compound one another to produce a magnetic field that attracts said plunger toward said permanent magnets, and said plunger is disposed in said closed position when said second polarity is in said reversed configuration, with the orientation of said second polarity in said opposite direction from said first polarity of said first permanent magnet resulting in a magnetic flux

produced by each of said first and second permanent magnets that substantially cancel out one another.

24. A fluid routing device for directing the transportation of a fluid, said fluid routing device comprising:

a housing having an opening with a seat disposed about said opening for selectively transporting the fluid therethrough; and

a valve coupled to said housing to selectively open and close said opening of said housing; said valve comprising:

a first permanent magnet extending along a magnet axis between a pair of ends, with said first permanent magnet having a first magnetic coercivity and a first polarity that is fixed along said magnet axis;

a second permanent magnet extending along said magnet axis between a pair of ends, with said second permanent magnet having a second magnetic coercivity lower than said first magnetic coercivity of said first permanent magnet such that said second permanent magnet has a second polarity capable of switching along said magnet axis between a complimentary configuration oriented in a common direction as said first polarity of said first permanent magnet, and a reversed configuration oriented in an opposite direction from said first polarity of said first permanent magnet; and

a coil surrounding at least said second permanent magnet and comprising an electrically conductive material configured to receive an electric current in one of a first direction and a second direction, opposing said first direction, with said coil configured to orient said second polarity in said complimentary configuration when electric current passes in said first direction and said coil configured to orient said second polarity in said reversed configuration when electric current passes in said second direction; and

a plunger movable along a plunger axis between a closed position in which said plunger abuts said seat to close said opening, and an open position in which said plunger is spaced from said seat to open said opening, with said plunger positioned in said closed position when said second polarity of said second permanent magnet is in one of said complimentary and reversed configurations, and with said plunger positioned in said open position when said second polarity of said second permanent magnet is in the other one of said complimentary and reversed configurations;

wherein said first and second permanent magnets are linearly aligned along said magnet axis, with one of said first and second permanent magnets being stationary and the other one of said first and second permanent magnets being movable.

25. The fluid routing device as set forth in claim 24, wherein said closed position of said plunger corresponds with said second polarity of said second permanent magnet having said complimentary configuration and said open position of said plunger corresponds with said second polarity of said second permanent magnet having said reversed configuration.

26. The fluid routing device as set forth in claim 24, wherein said closed position of said plunger corresponds with said second polarity of said second permanent magnet having said reversed configuration and said open position of said plunger corresponds with said second polarity of said second permanent magnet having said complimentary configuration.

27. The fluid routing device as set forth in claim 24, wherein said first permanent magnet is comprised of an alloy of neodymium, iron and boron.

28. The fluid routing device as set forth in claim 24, wherein said second permanent magnet is comprised of an alloy of aluminum, nickel, and cobalt.

29. A valve for use with a housing having an opening with a seat disposed about said opening for selectively transporting a fluid therethrough, with said valve coupled to the housing and selectively opening and closing the opening of the housing; said valve comprising:

a first permanent magnet extending along a magnet axis between a pair of ends, with said first permanent magnet having a first magnetic coercivity and a first polarity that is fixed along said magnet axis;

a second permanent magnet extending along said magnet axis between a pair of ends, with said second permanent magnet having a second magnetic coercivity lower than said first magnetic coercivity of said first permanent magnet such that said second permanent magnet has a second polarity capable of switching along said magnet axis between a complimentary configuration oriented in a common direction as said first polarity of said first permanent magnet, and a reversed configuration oriented in an opposite direction from said first polarity of said first permanent magnet;

a coil surrounding at least said second permanent magnet and comprising an electrically conductive material configured to receive an electric current in one of a first direction and a second direction, opposing said first direction, with said coil configured to orient said second polarity in said complimentary configuration when electric current passes in said first direction and said coil configured to orient said second polarity in said reversed configuration when electric current passes in said second direction; and

a plunger movable along a plunger axis between a closed position for abutting said plunger with the seat to close the opening, and an open position for spacing said plunger from the seat to open the opening, with said plunger positioned in said closed position when said second polarity of said second permanent magnet is in one of said complimentary and

reversed configurations, and with said plunger positioned in said open position when said second polarity of said second permanent magnet is in the other one of said complimentary and reversed configurations;

wherein said first and second permanent magnets are linearly aligned along said magnet axis, with one of said first and second permanent magnets being stationary and the other one of said first and second permanent magnets being movable.

STATEMENT UNDER ARTICLE 19(1)

In this Article 19 Amendment, the content of claims 8 and 10 were moved into each of independent claims 1 and 23 such that independent claims 1 and 23 now include a plunger disposed in a closed position when a second polarity of a second permanent magnet is in a reversed configuration, with the orientation of said second polarity in an opposite direction from a first polarity of a first permanent magnet resulting in a magnetic flux produced by each of said first and second permanent magnets that substantially cancel out one another. The Applicant respectfully asserts that each of references D1-D5, either independently or in combination, fail to disclose, teach, or even suggest the claimed fluid routing device as now claimed in claim 1 and the claimed valve as now claimed in claim 23.

Furthermore, the content of claims 1 and 11 are included in independent claim 24 and the content of claims 23 and 11 are included in independent claim 29. Independent claims 24 and 29 include first and second permanent magnets that are linearly aligned along a magnet axis, with one of said first and second permanent magnets being stationary and the other one of said first and second permanent magnets being movable. The Applicant respectfully asserts that each of references D1-D5, either independently or in combination, fail to disclose, teach, or even suggest the claimed fluid routing device as now claimed in claim 24 and the claimed valve as now claimed in claim 29.

Applicant submits that the claims are all linked to form a single general inventive concept, are clear and unambiguous, and are both novel and involve an inventive step. Further and favorable reconsideration of the subject application is hereby requested.

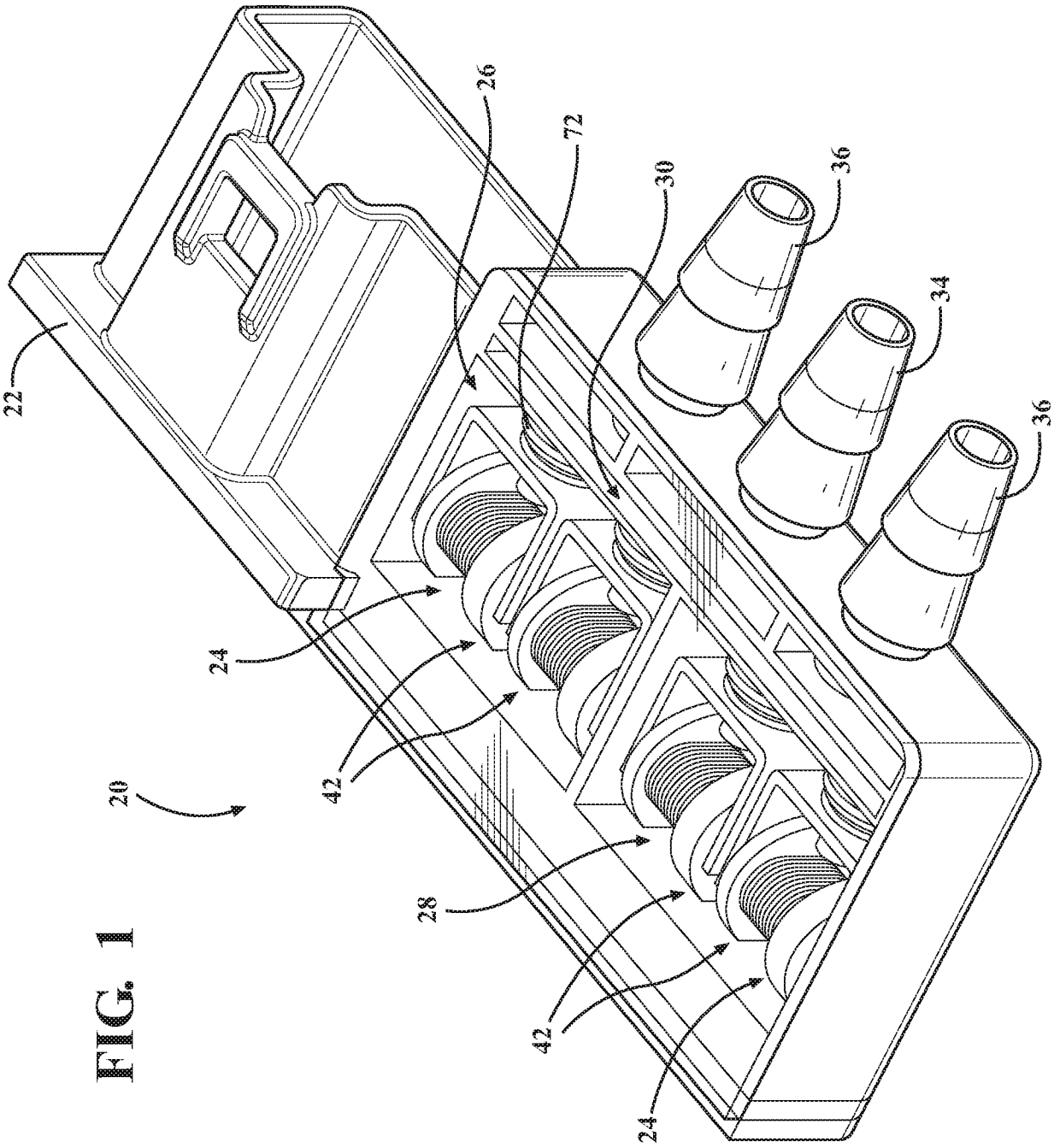

FIG. 1

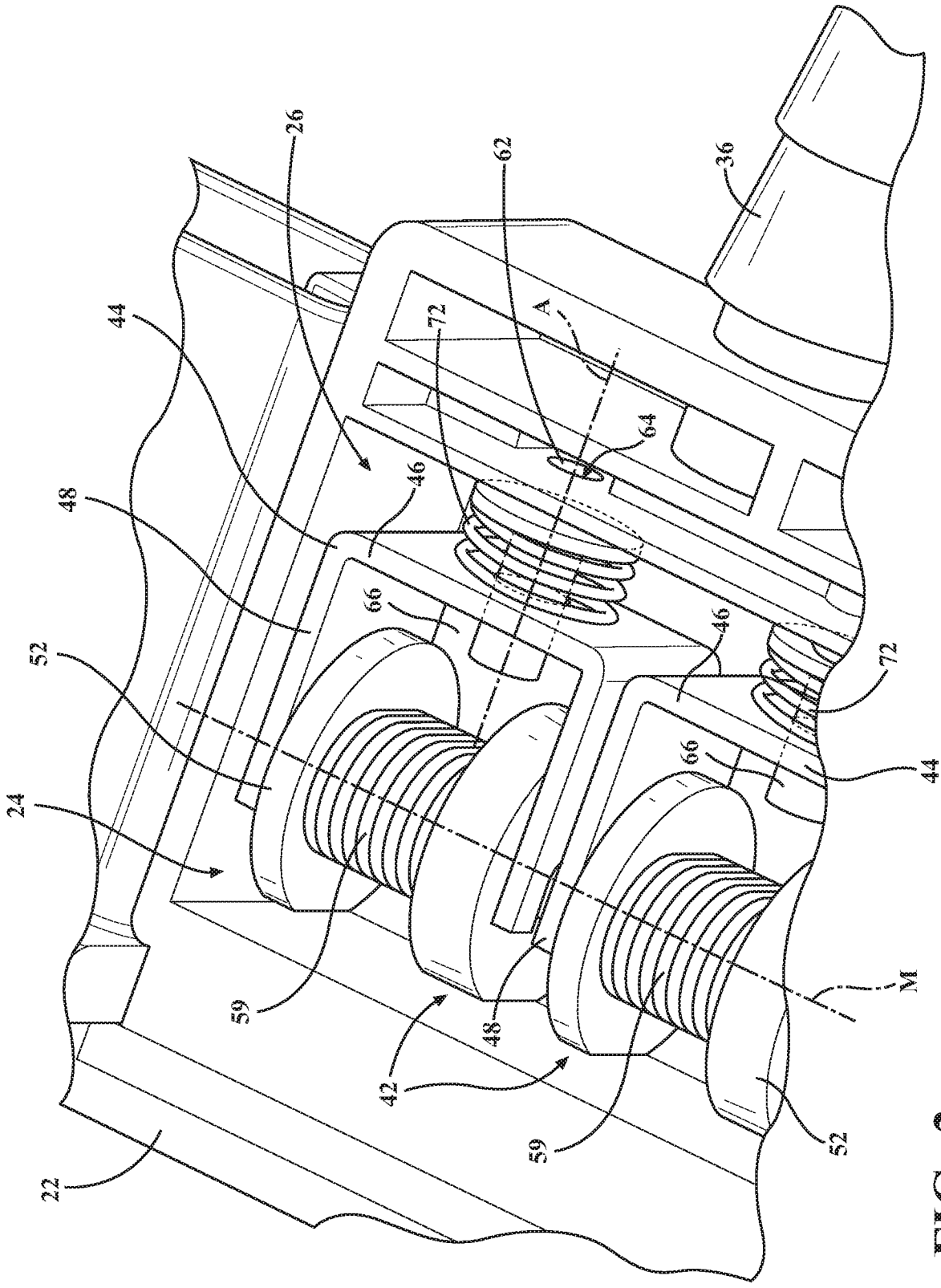

FIG. 2

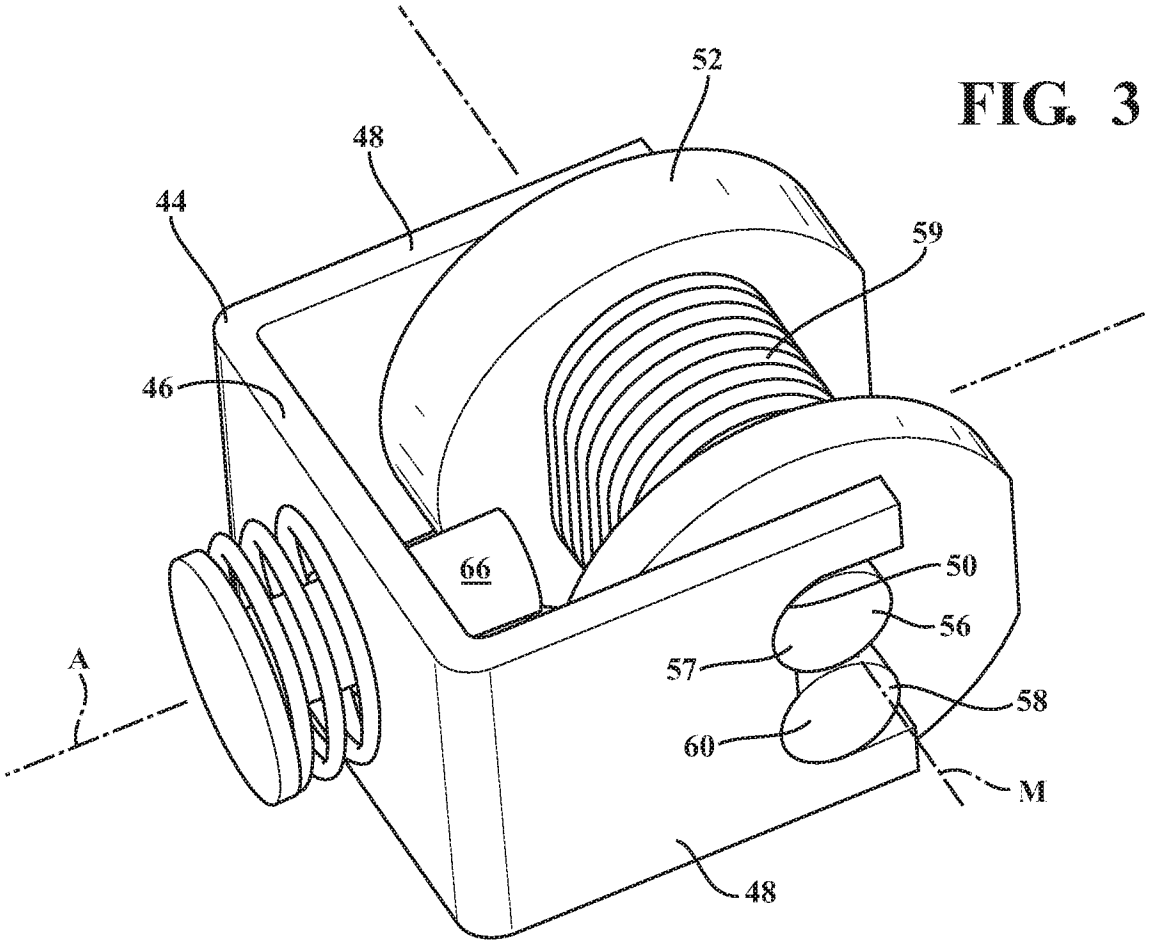
52
48
44
59
46
66
50
56
A
57
58
60
M
48

FIG. 3

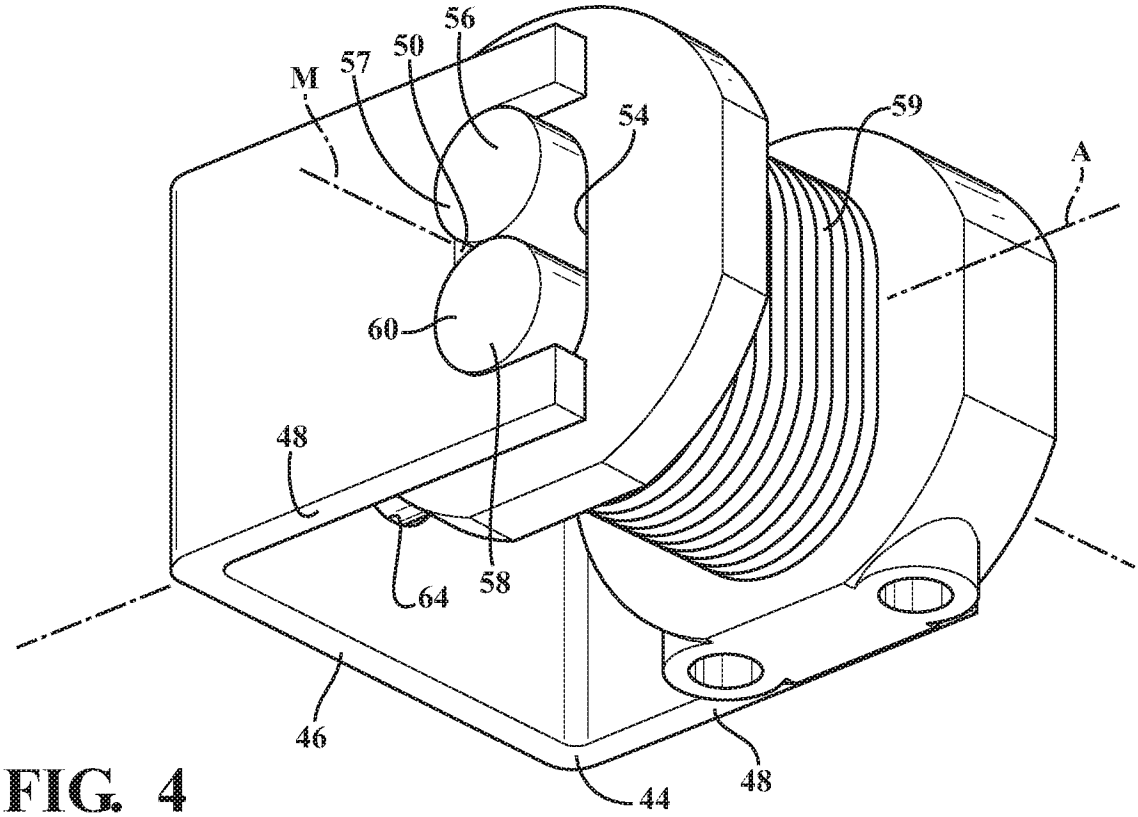
56
M
57
50
54
59
A
60
48
64
58
46
44
48

FIG. 4

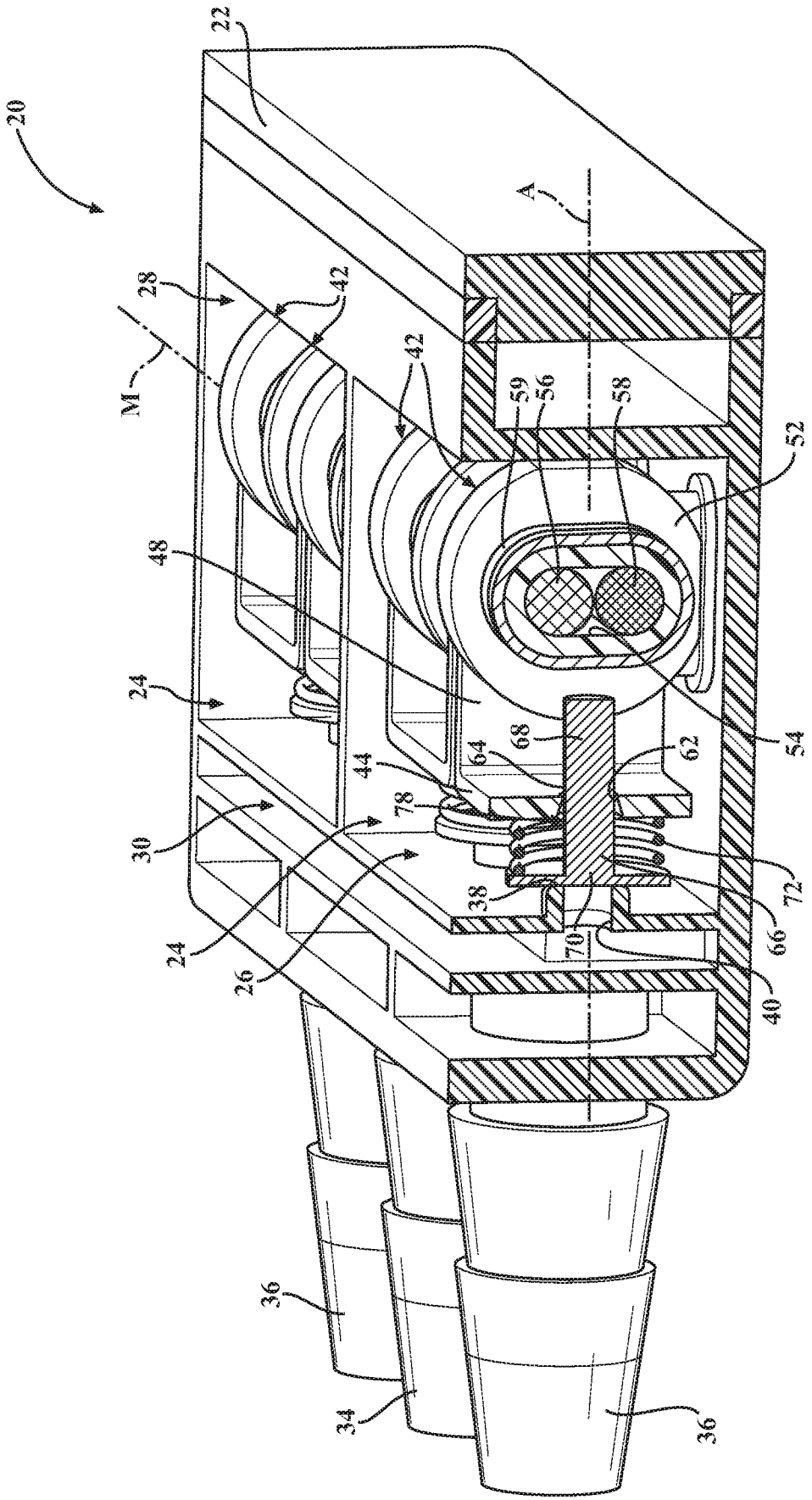
20
22
A
28
42
M
42
59
56
58
52
48
24
54
68
64
62
44
78
30
72
38
66
70
24
26
40
36
34
36

FIG. 5

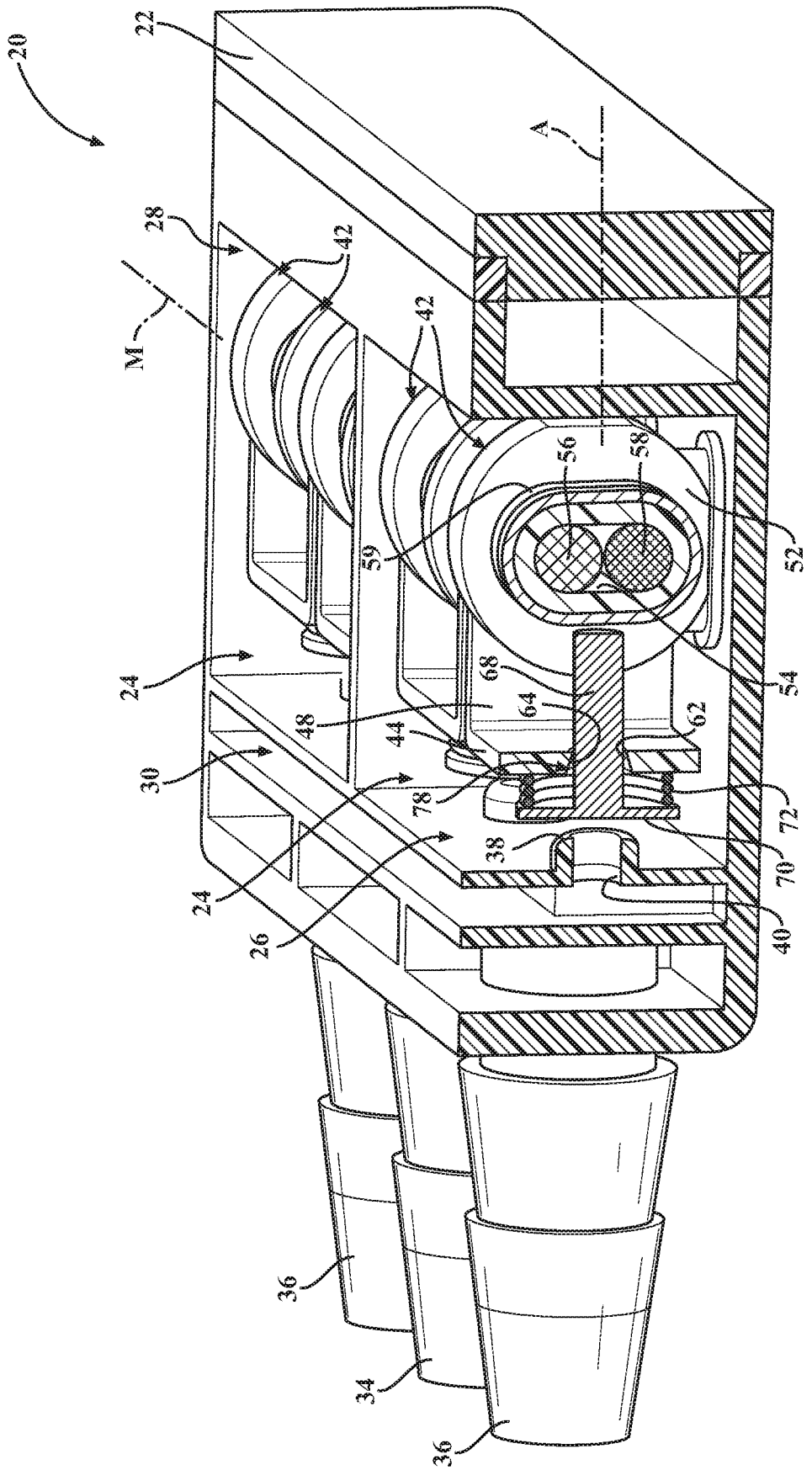
20
22
A
28
42
M
42
56
58
59
52
24
68
64
54
48
44
62
30
78
72
38
70
24
26
40
36
34
36

FIG. 6

FIG. 7

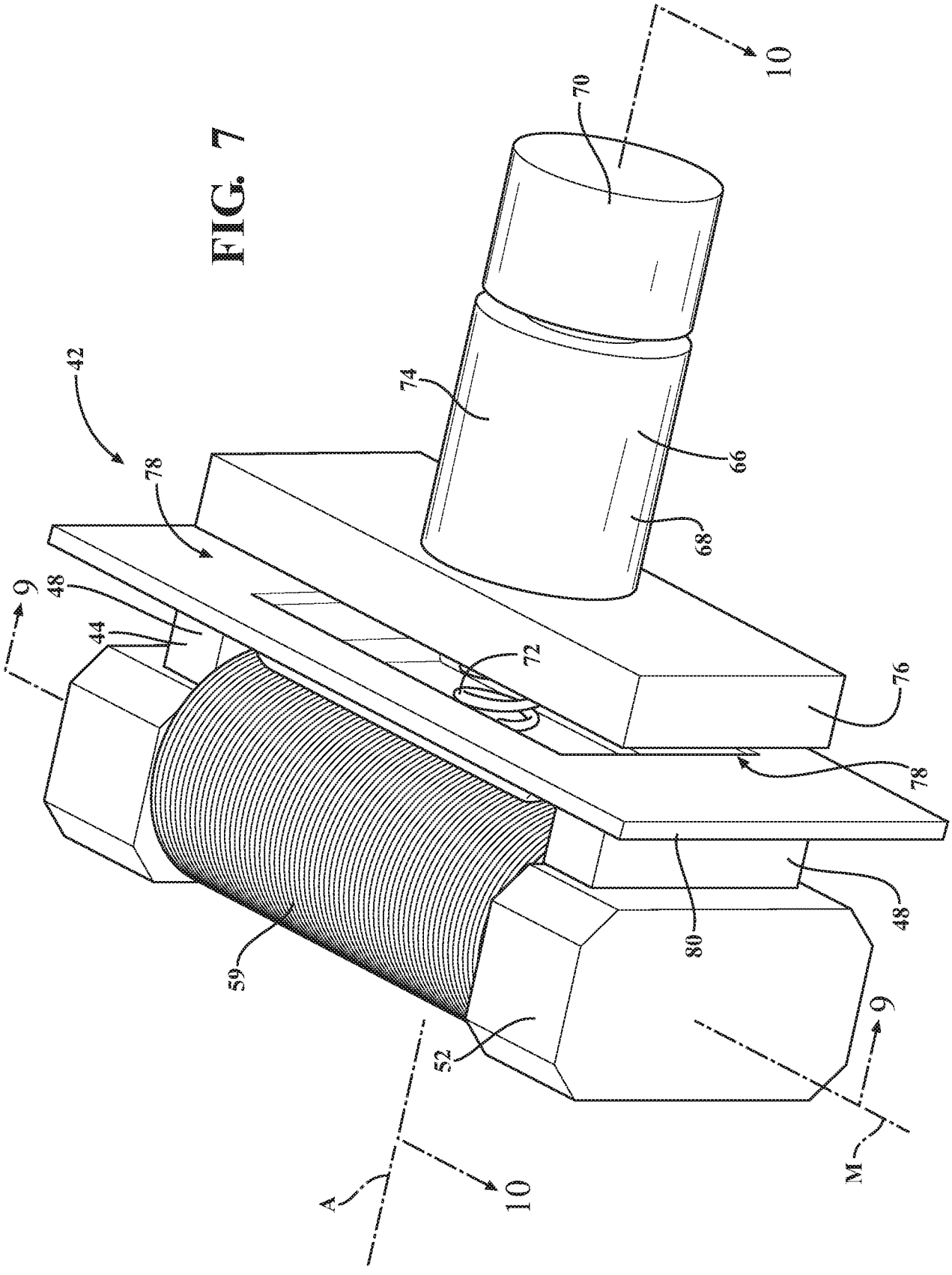

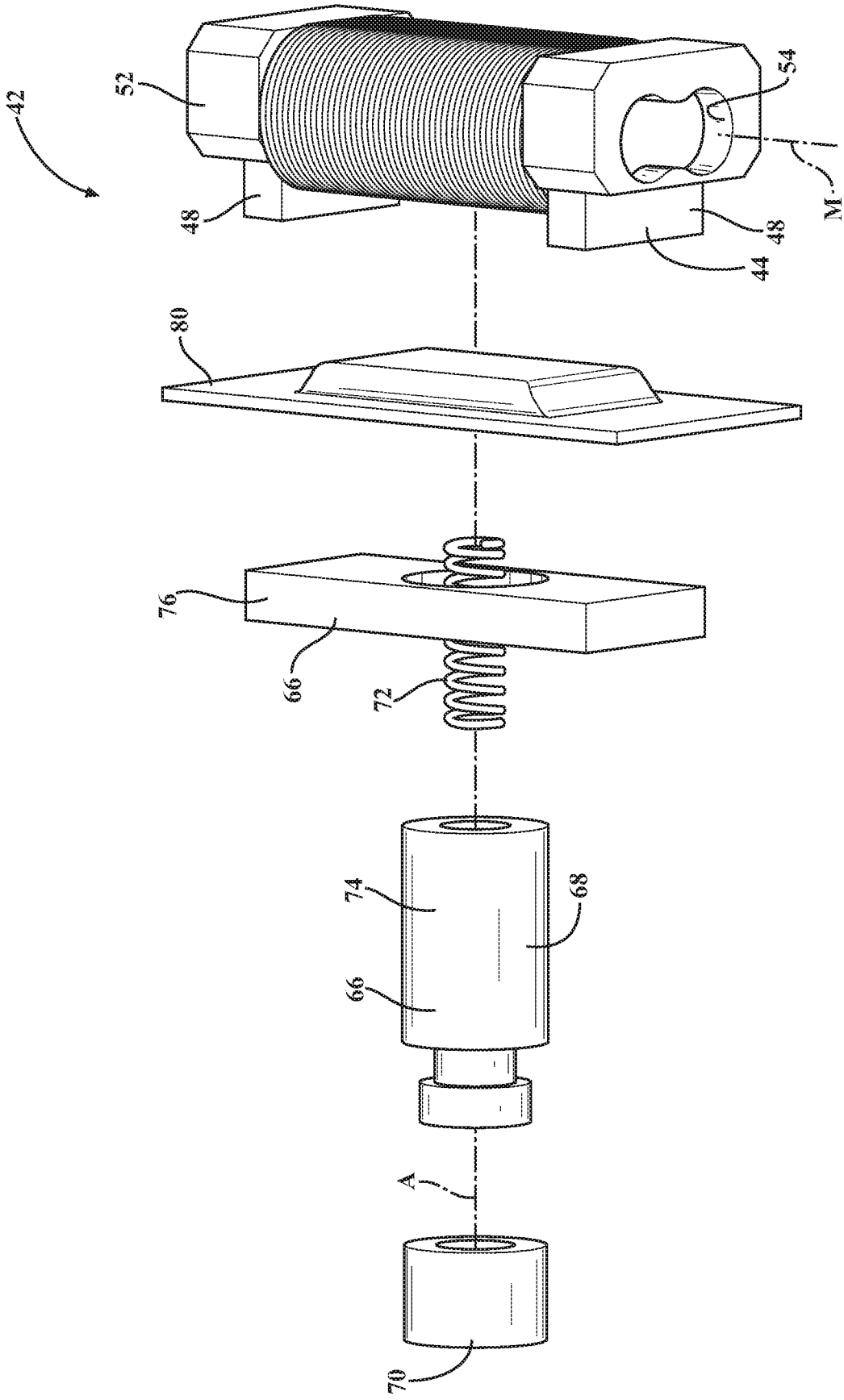

FIG. 8

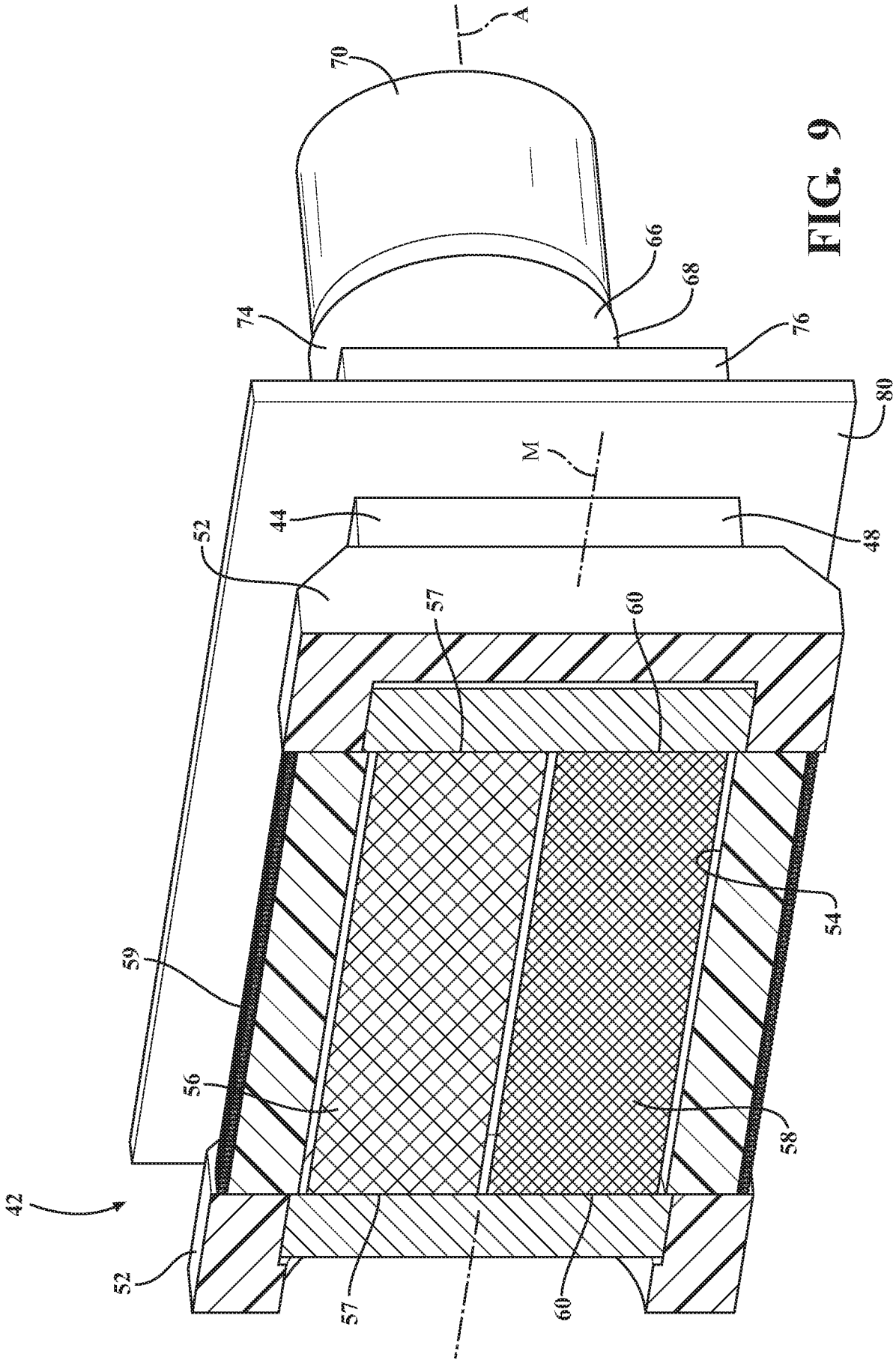

FIG. 9

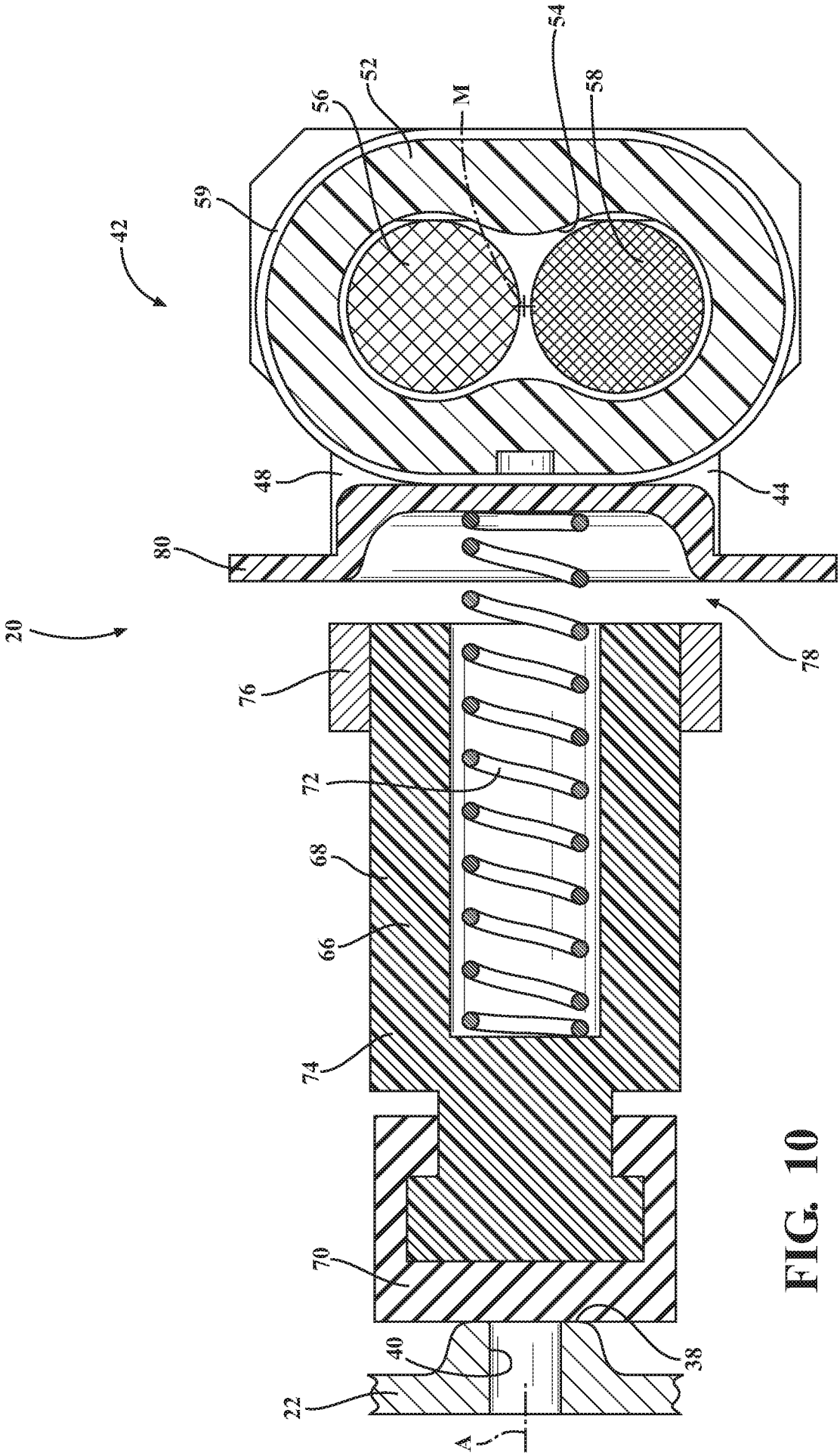

FIG. 10

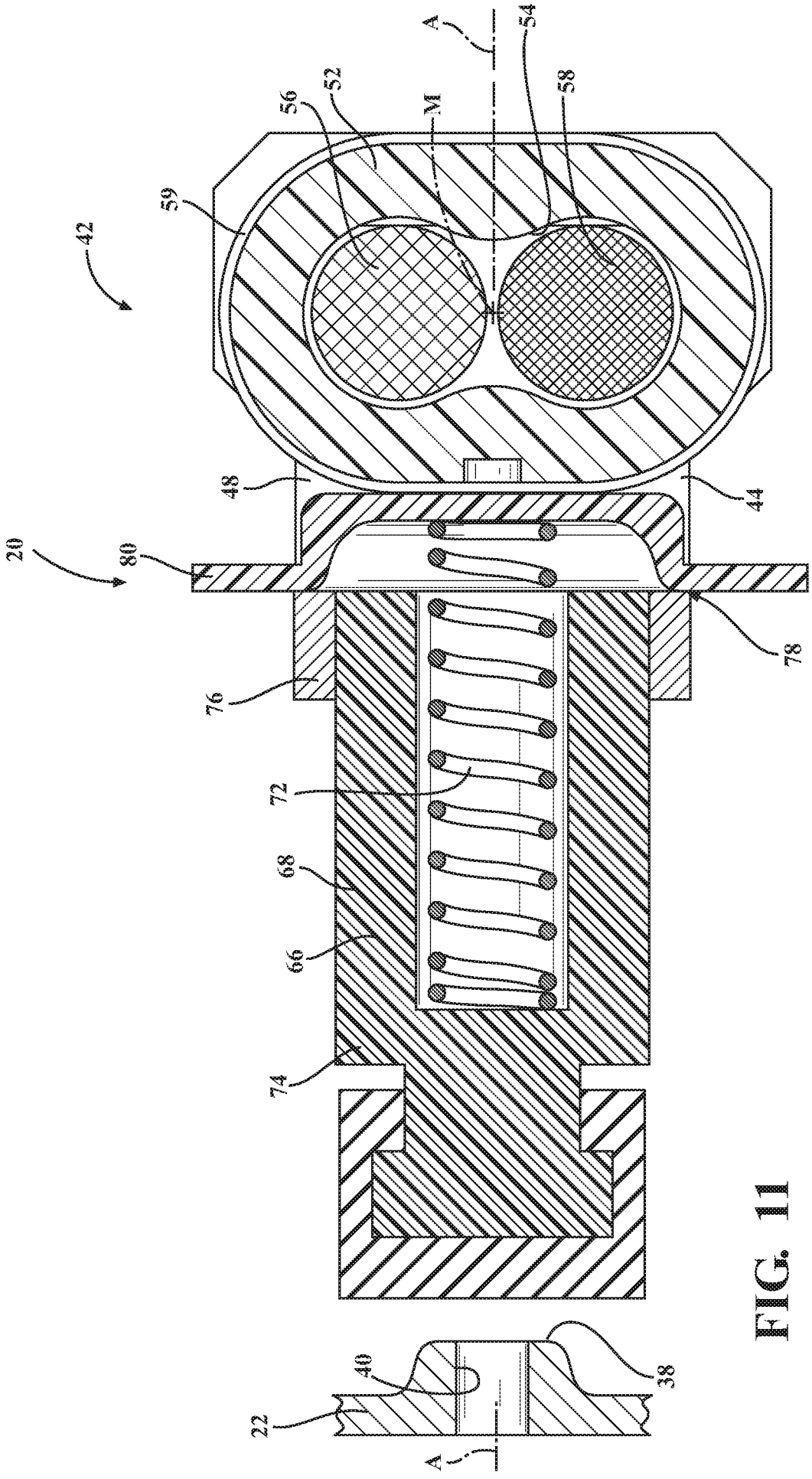

FIG. 11

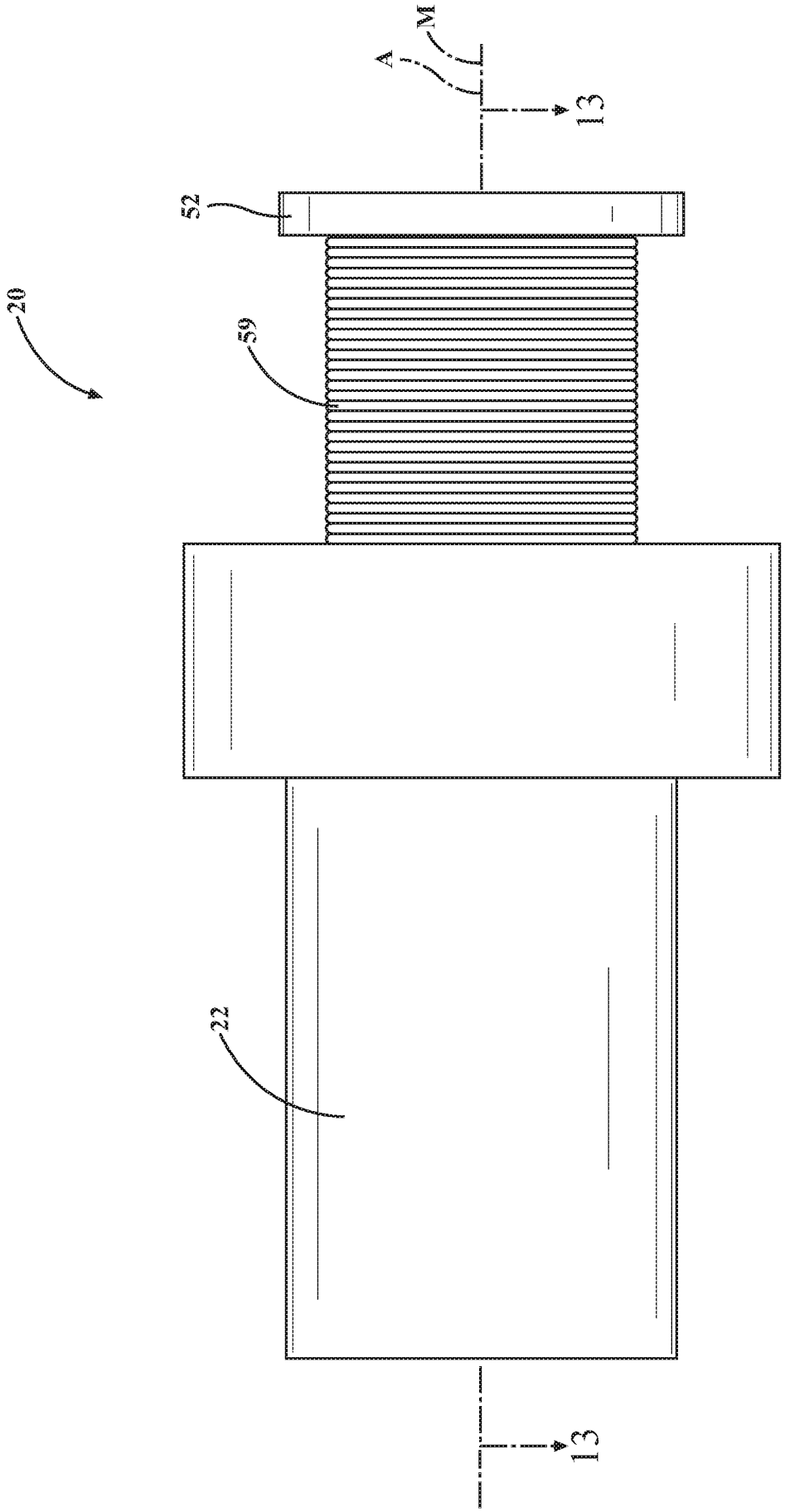

FIG. 12

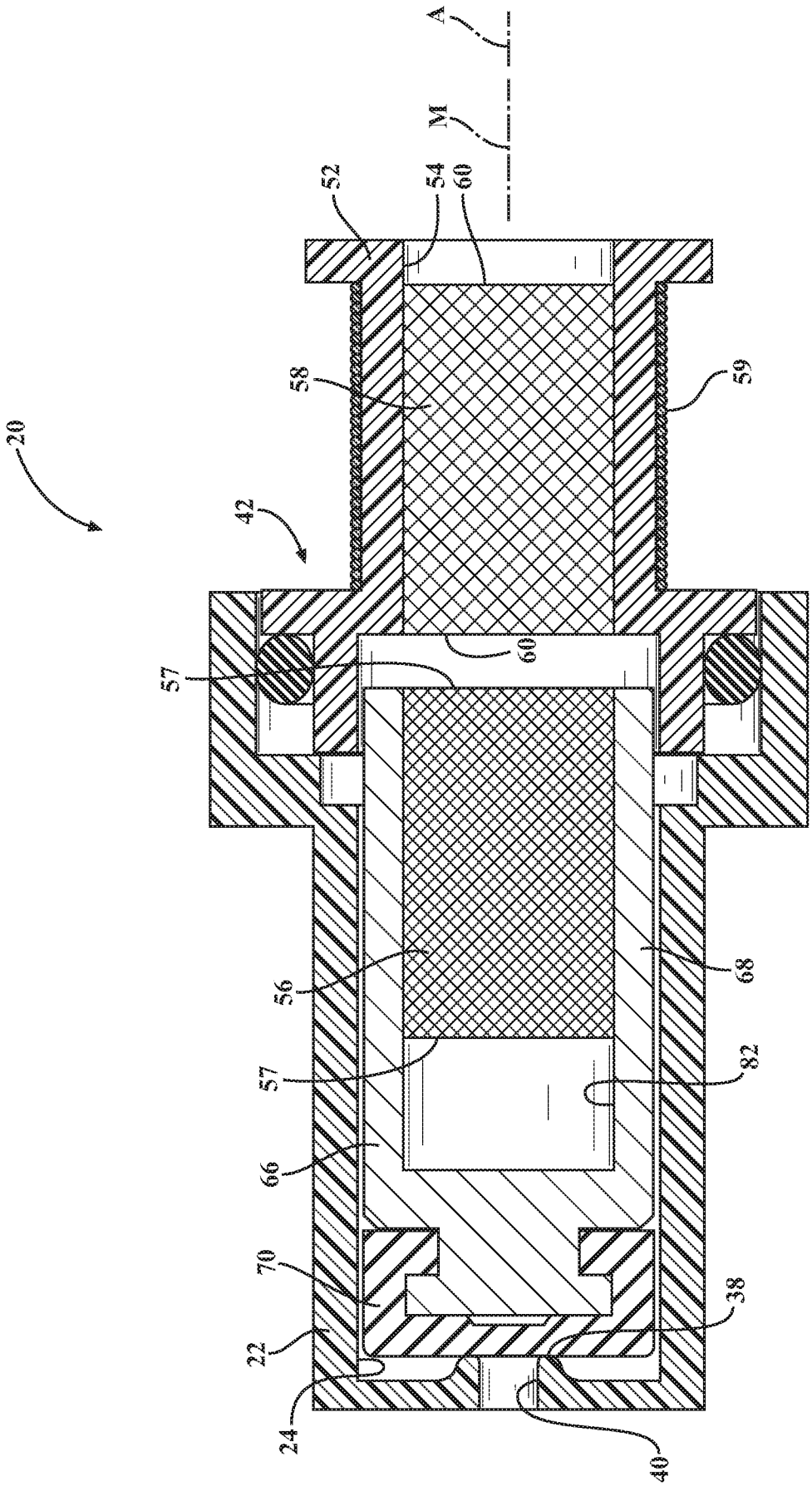

FIG. 13

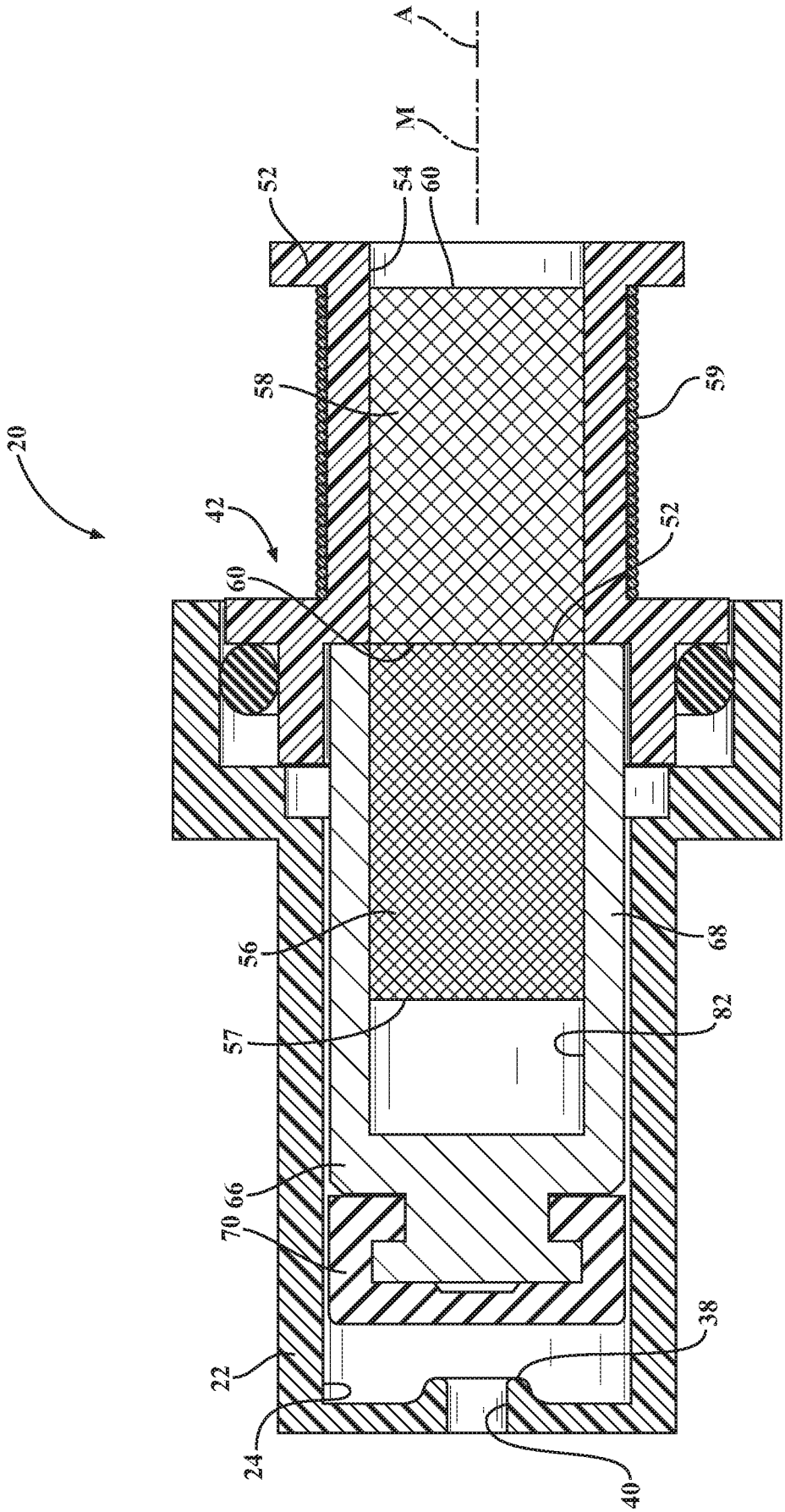

FIG. 14

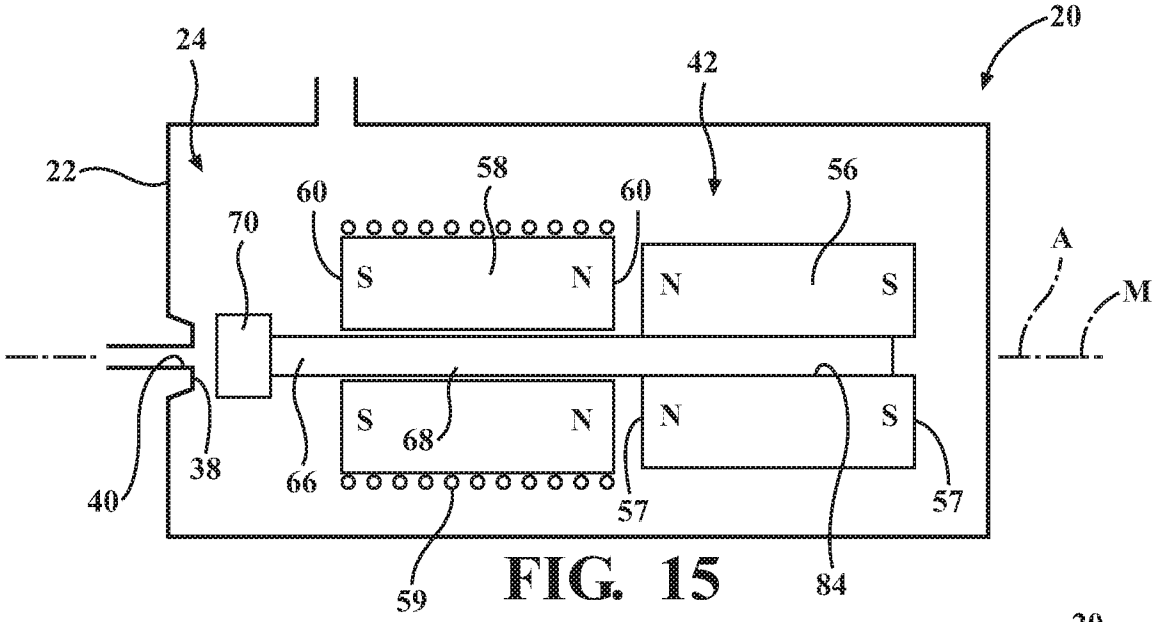

FIG. 15

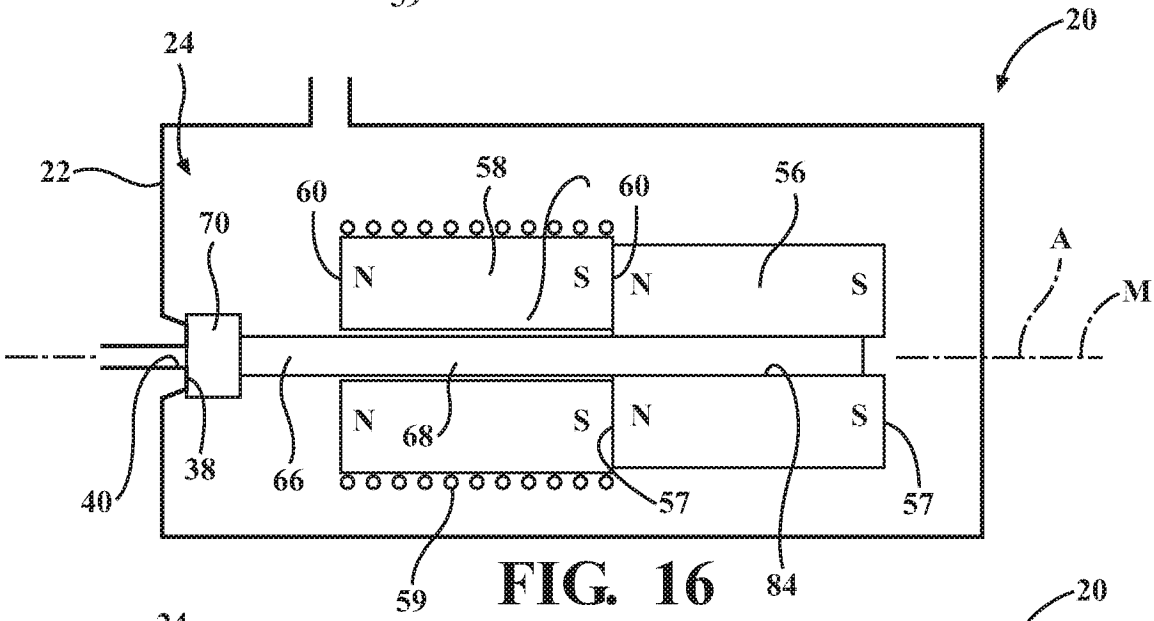

FIG. 16

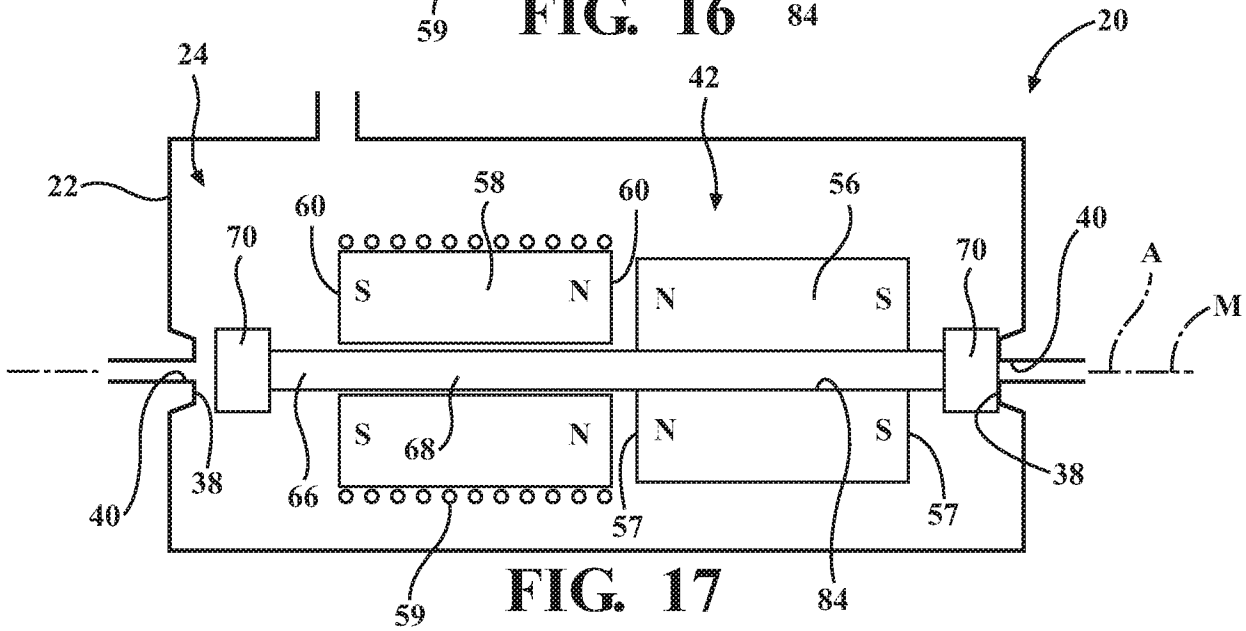

FIG. 17

INTERNATIONAL SEARCH REPORT

International application No
PCT/US2017/039546

A. CLASSIFICATION OF SUBJECT MATTER
INV. F16K31/08 A61H9/00 B60N2/44 F16K31/06 F16K11/22
F16K11/24 F16K27/00 F16K27/02 H01F1/00
ADD.
According to International Patent Classification (IPC) or to both national classification and IPC

B. FIELDS SEARCHED

Minimum documentation searched (classification system followed by classification symbols)
F16K A61H B60N H01F

Documentation searched other than minimum documentation to the extent that such documents are included in the fields searched

Electronic data base consulted during the international search (name of data base and, where practicable, search terms used)
EPO-Internal, WPI Data

C. DOCUMENTS CONSIDERED TO BE RELEVANT

Category*	Citation of document, with indication, where appropriate, of the relevant passages	Relevant to claim No.
X	US 4 403 765 A (FISHER RICHARD T [US]) 13 September 1983 (1983-09-13) column 3, line 30 - column 7, line 12; figures	1-23
X	US 3 368 788 A (PADULA LAWRENCE D) 13 February 1968 (1968-02-13) column 1, line 62 - column 3, line 27; figures 1, 2a, 2b	1-23
X	DE 10 2013 210881 A1 (BOSCH GMBH ROBERT [DE]) 11 December 2014 (2014-12-11) paragraph [0023] - paragraph [0030]; figures	1-23
A	US 6 483 688 B1 (JONES THOMAS R [US]) 19 November 2002 (2002-11-19) column 4, lines 43-44	21

-/--

[X] Further documents are listed in the continuation of Box C.

[X] See patent family annex.

* Special categories of cited documents :

"A" document defining the general state of the art which is not considered to be of particular relevance

"E" earlier application or patent but published on or after the international filing date

"L" document which may throw doubts on priority claim(s) or which is cited to establish the publication date of another citation or other special reason (as specified)

"O" document referring to an oral disclosure, use, exhibition or other means

"P" document published prior to the international filing date but later than the priority date claimed

"T" later document published after the international filing date or priority date and not in conflict with the application but cited to understand the principle or theory underlying the invention

"X" document of particular relevance; the claimed invention cannot be considered novel or cannot be considered to involve an inventive step when the document is taken alone

"Y" document of particular relevance; the claimed invention cannot be considered to involve an inventive step when the document is combined with one or more other such documents, such combination being obvious to a person skilled in the art

"&" document member of the same patent family

Date of the actual completion of the international search	Date of mailing of the international search report
19 September 2017	28/09/2017

Name and mailing address of the ISA/	Authorized officer
European Patent Office, P.B. 5818 Patentlaan 2 NL - 2280 HV Rijswijk Tel. (+31-70) 340-2040, Fax: (+31-70) 340-3016	Asensio Estrada, G

1

Form PCT/ISA/210 (second sheet) (April 2005)

INTERNATIONAL SEARCH REPORT

International application No
PCT/US2017/039546

C(Continuation). DOCUMENTS CONSIDERED TO BE RELEVANT

Category*	Citation of document, with indication, where appropriate, of the relevant passages	Relevant to claim No.
A	WO 2014/135909 A1 (KONGSBERG AUTOMOTIVE AB) 12 September 2014 (2014-09-12) the whole document	1-23

1

INTERNATIONAL SEARCH REPORT

Information on patent family members

International application No
PCT/US2017/039546

Patent document cited in search report	Publication date	Patent family member(s)	Publication date
US 4403765 A	13-09-1983	NONE	
US 3368788 A	13-02-1968	BE 680799 A	17-10-1966
		CH 451629 A	15-05-1968
		DE 1550504 B1	12-02-1970
		DK 130730 B	01-04-1975
		FR 1479076 A	28-04-1967
		GB 1147663 A	02-04-1969
		NL 6606486 A	14-11-1966
		SE 315172 B	22-09-1969
		US 3368788 A	13-02-1968
DE 102013210881 A1	11-12-2014	NONE	
US 6483688 B1	19-11-2002	NONE	
WO 2014135909 A1	12-09-2014	CN 105121928 A	02-12-2015
		DE 112013006786 T5	03-12-2015
		JP 2016509183 A	24-03-2016
		KR 20150135248 A	02-12-2015
		US 2016018016 A1	21-01-2016
		WO 2014135909 A1	12-09-2014