Jan. 17, 1939. C. W. FAILOR 2,144,529

RAILWAY TRAFFIC CONTROLLING APPARATUS

Original Filed Sept. 29, 1937 3 Sheets-Sheet 1

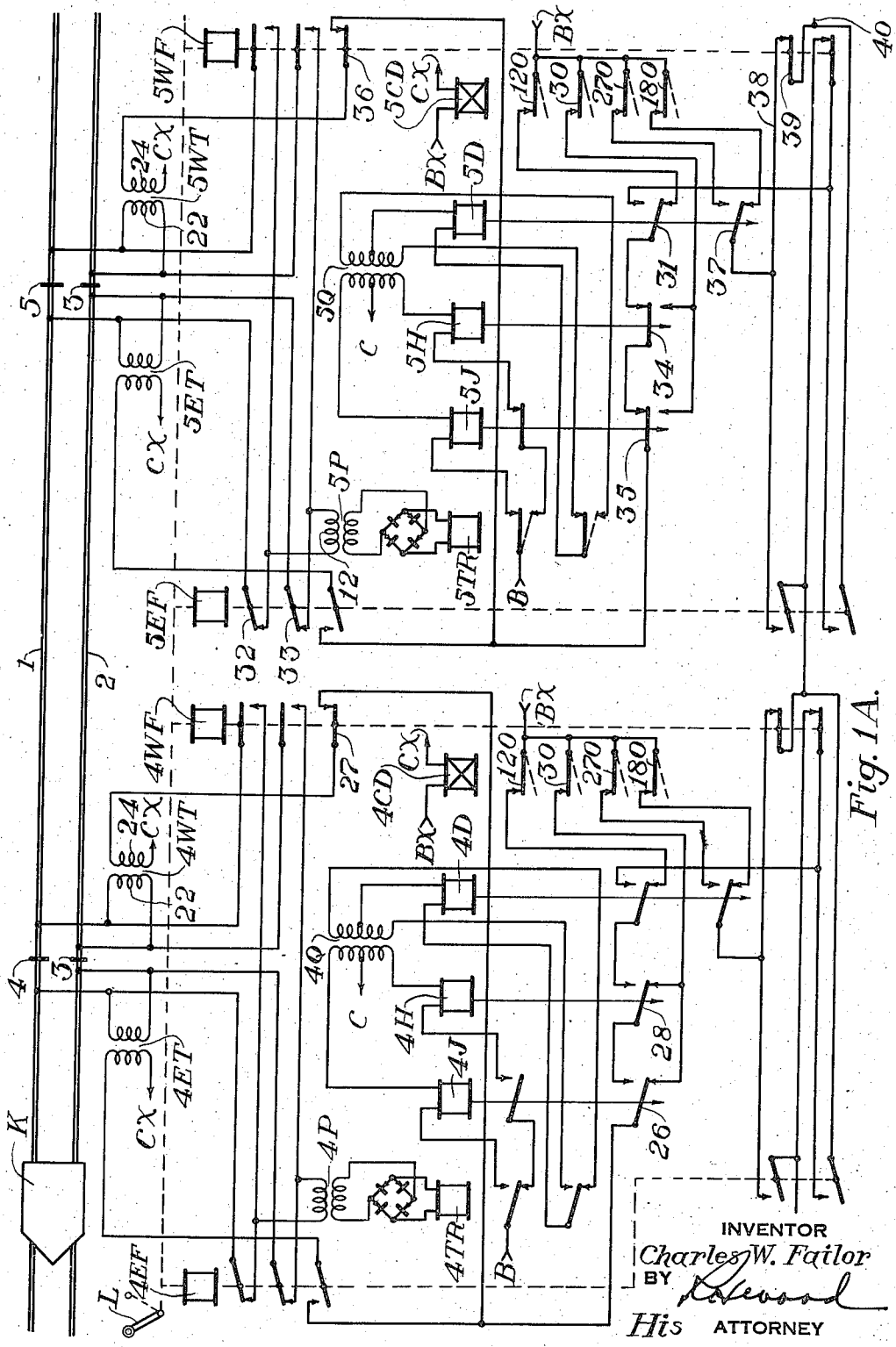

Fig. 1A.

INVENTOR
Charles W. Failor
BY
His ATTORNEY

Jan. 17, 1939. C. W. FAILOR 2,144,529

RAILWAY TRAFFIC CONTROLLING APPARATUS

Original Filed Sept. 29, 1937 3 Sheets-Sheet 2

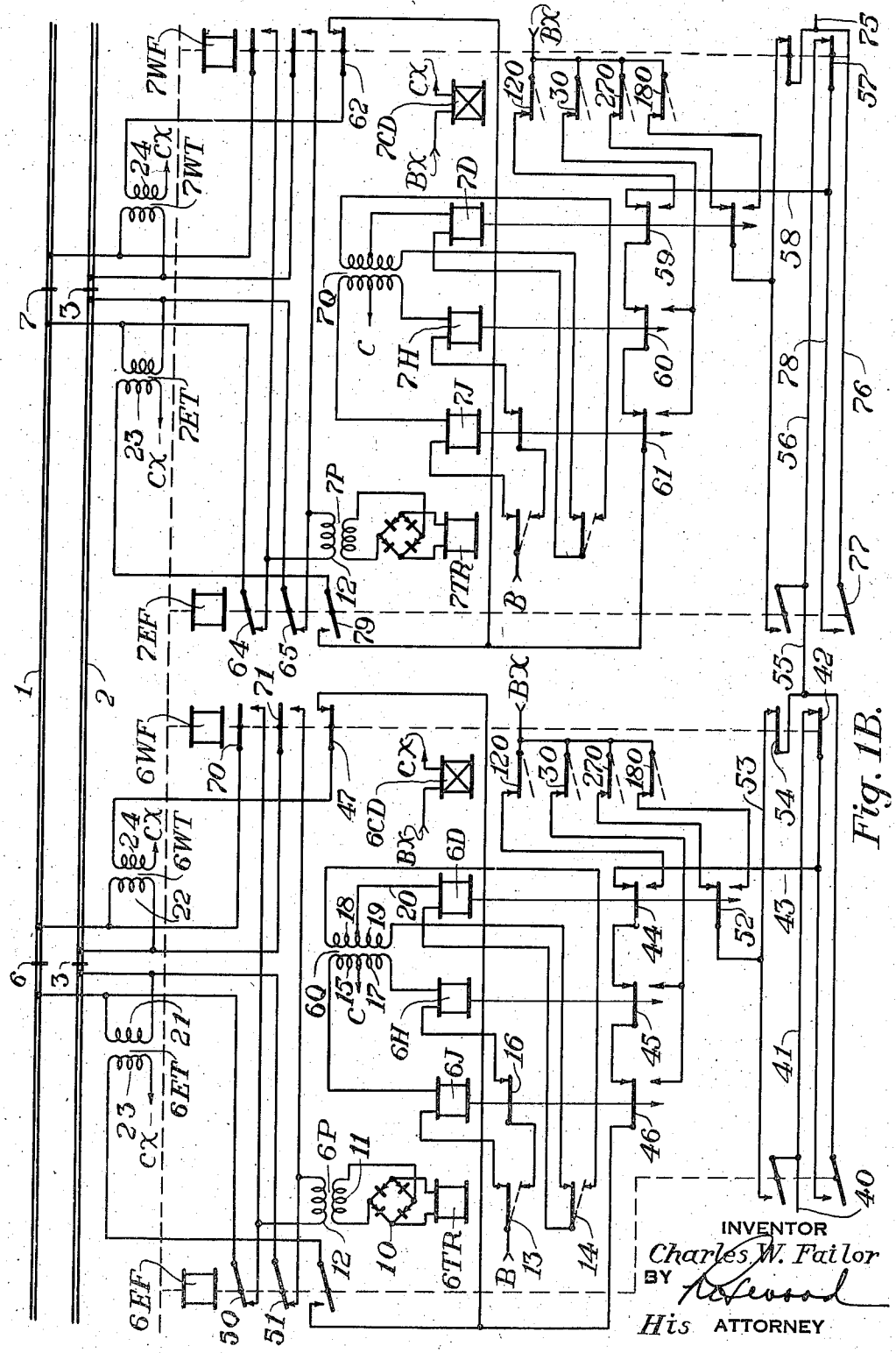

Fig. 1B.

INVENTOR
Charles W. Failor
BY
His ATTORNEY

Jan. 17, 1939. C. W. FAILOR 2,144,529

RAILWAY TRAFFIC CONTROLLING APPARATUS

Original Filed Sept. 29, 1937 3 Sheets-Sheet 3

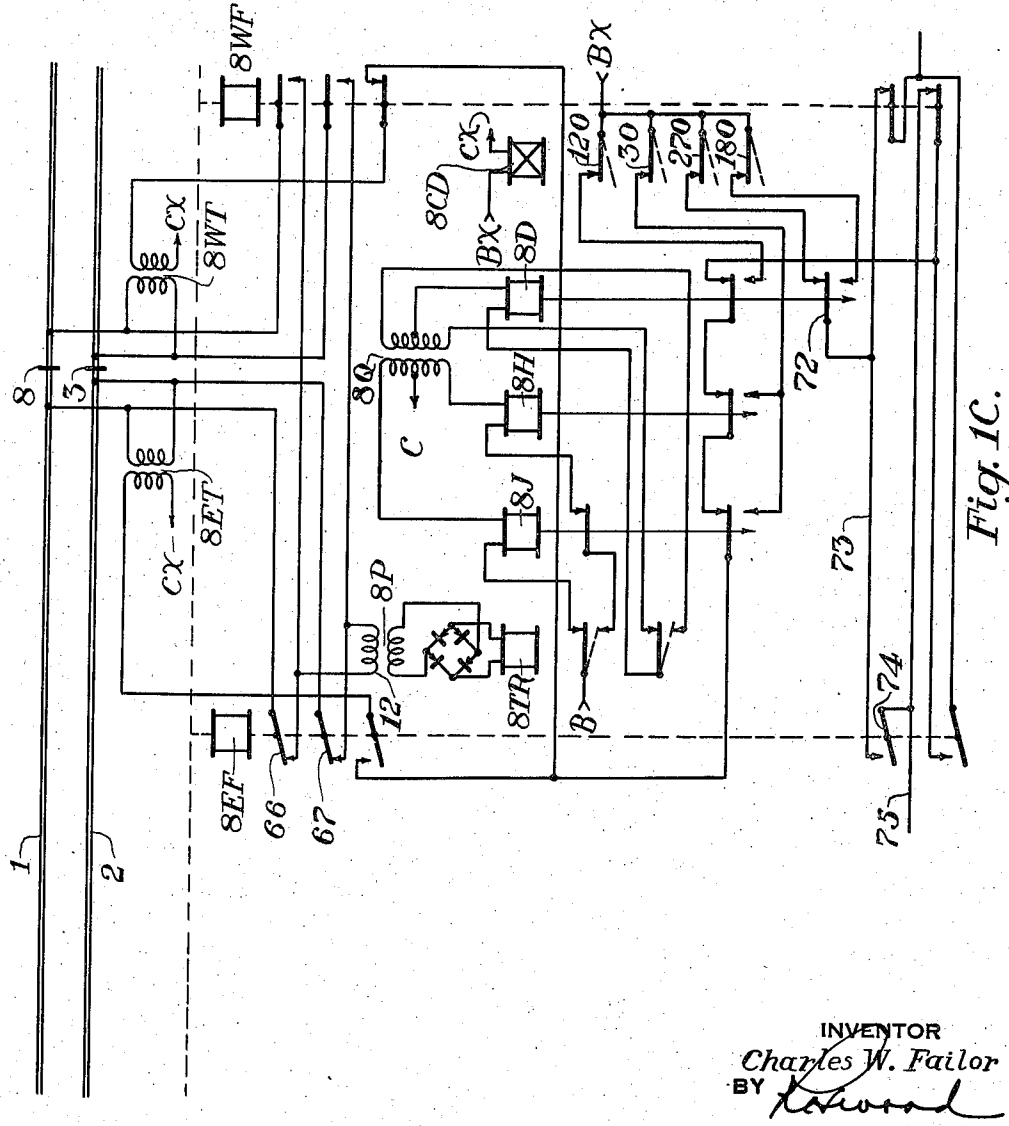

Fig. 1C.

INVENTOR
Charles W. Failor
BY
His ATTORNEY

Patented Jan. 17, 1939 2,144,529

UNITED STATES PATENT OFFICE

2,144,529

RAILWAY TRAFFIC CONTROLLING APPARATUS

Charles W. Failor, Forest Hills, Pa., assignor to The Union Switch & Signal Company, Swissvale, Pa., a corporation of Pennsylvania

Application September 29, 1937, Serial No. 166,382
Renewed January 3, 1938

25 Claims. (Cl. 246—39)

My invention relates to railway traffic controlling apparatus for supplying coded currents to track circuits for the control of train carried governing means, and more particularly it relates to apparatus for supplying coded currents to the rails of a controlled manual block system.

The system shown in this application is an improvement on the systems shown in an application of Frank H. Nicholson and Leslie R. Allison, Serial No. 210,744, filed May 28, 1938, for Railway traffic controlling apparatus.

I shall describe one form of apparatus embodying my invention, and shall then point out the novel features thereof in claims.

In the accompanying drawings, Figs. 1A, 1B and 1C when placed end to end in the order named, with Fig. 1A on the left, constitute a diagrammatic view showing one form of apparatus embodying my invention.

Referring now to the drawings, the reference characters 1 and 2 designate the track rails of a stretch of track over which traffic may move in either direction. These rails are divided by insulated joints 3 at locations, 4, 5, 6, 7 and 8 into a plurality of successive track sections 4—5, 5—6, etc.

For establishing the direction of traffic through the stretch, each location is provided with an eastbound traffic relay and a westbound traffic relay designated by the reference characters EF and WF, respectively, each with a prefix the same as the reference character of the corresponding location. As indicated by the broken line, the traffic relays EF and WF may be governed by a manually controlled lever L. The particular form of control of the traffic relays by the lever L forms no part of my invention, and it will be considered sufficient to state, therefore, that when the lever L is in its extreme left-hand position, as shown, the relays WF will be energized and the relays EF will be deenergized to establish traffic in the westbound direction, whereas when lever L is in its extreme right-hand position traffic relays EF will be energized and traffic relays WF will be deenergized to establish traffic in the eastbound direction.

For the operation of this system I provide sources of direct current and alternating current, the terminals of which are designated by the reference characters B and C, and BX and CX, respectively, at each location.

Each location is provided with a constantly operating motor coder designated by the reference character CD, with a prefix the same as the reference character of the associated location, and directly connected to the terminals BX and CX at such location. Each motor coder is provided with a plurality of constantly operating contacts 30, 120, 180 and 270, which contacts operate respectively to interrupt the supply of alternating current track circuit energy at 30, 120, 180 and 270 times per minute.

Each location is provided with a direct current code following track relay designated by the reference character TR with a prefix to correspond to the location, and receiving energy through a rectifier 10, which in turn receives energy from the secondary winding 11 of a transformer designated by the reference character P with a prefix to correspond to the location. As will be explained more in detail hereinafter, each primary winding 12 of the transformers P is connected to the rails of either the left-hand section or the right-hand section at the corresponding location in accordance with the condition of the associated traffic relays EF and WF.

For controlling the character of the coded current supplied to the rails, each location is provided with a home relay and a distant relay designated by the reference characters H and D, respectively, each with a prefix to correspond to the location. Also located at each location is an auxiliary relay and a transformer designated by the reference characters J and Q, respectively, with a prefix to correspond to the location.

The home and distant relays H and D are controlled by the associated code following track relay in the following manner. Referring to location 6, for example, it will be seen that track relay 6TR is following code with the result that its contacts 13 and 14 are moving in unison between their front and back points. When the front point of contact 13 of relay 6TR is closed, relay 6J will become energized by a circuit which may be traced from terminal B, through front point of contact 13 of relay 6TR, relay 6J and upper portion 15 of the primary winding of transformer 6Q to terminal C. It will be clear, therefore, that relay 6J is periodically energized upon each closing of front contact 13 of relay 6TR, and that this relay, due to its slow-acting characteristic, will remain in its energized condition during the open circuit periods when the front point of contact 13 is open. Upon the closing of the back point of contact 13 of relay 6TR, home relay 6H will become energized by a circuit which may be traced over a path which passes from terminal B, through back point of contact 13 of relay 6TR, front contact 16 of

relay 6J, relay 6H and lower portion 17 of the primary winding of transformer 6Q to terminal C. Relay 6H is likewise provided with a slow releasing characteristic, so that this relay will also remain in its energized condition during the open circuit periods.

From the description thus far given it will be plain that the upper and lower portions 15 and 17 of transformer 6Q are alternately energized in opposite directions to induce similar currents in upper portion 18 and lower portion 19 of the secondary winding of transformer 6Q. These impulses are mechanically rectified by contact 14 of relay 6TR in such a manner that relay 6D is always energized in the same direction; that is, when the front point of contact 14 becomes closed, energy will flow from the center terminal of the secondary winding of transformer 6Q through wire 20 to relay 6D, and thence through the front point of contact 14 of relay 6TR back to the lower portion 19 of the secondary winding of transformer 6Q. In a similar manner, when the back point of contact 14 becomes closed, energy will flow in the same direction from the center terminal of the secondary winding of transformer 6Q, through wire 20 to relay 6D, and thence through the back point of contact 14 of relay 6TR to the outer terminal of upper portion 18 of the secondary winding of transformer 6Q. Relay 6D is provided with a slow releasing characteristic, so that it will remain in its energized condition although periodically energized. Relays 6H and 6D are so chosen and adjusted that relay 6H will become picked up when the code following relay 6TR is following any one of the four different codes previously specified, but relay 6D will become picked up only when the code following relay 6TR is following one or another of the three higher codes, that is, 120, 180 or 270. Each of the other relays H and D is controlled by the associated code following track relay in the same manner as herein described for relays 6H and 6D.

Connected across the rails of the left-hand section at each location is the secondary winding 21 of a transformer designated by the reference character ET with a prefix corresponding to the location, and connected across the rails of each right-hand section at each location is the secondary winding 22 of a transformer designated by the reference character WT with a prefix corresponding to the location. As will be explained more in detail hereinafter, primary windings 23 of the transformers ET or the primary windings 24 of the transformer WT are supplied with coded alternating current in accordance with the condition of the traffic relays EF and WF.

Having thus described in general the apparatus embodying my invention, I shall now describe the operation of the system. With the lever L in its extreme left-hand position, as shown in the drawings, so that the relays WF are energized and the relays EF are deenergized to establish traffic in the westbound direction, I place a train, indicated diagrammatically by the reference character K, in the section immediately to the left of location 4. Due to the presence of the train, track relay 4TR, and consequently relays 4H, 4J and 4D are all deenergized. With the apparatus in this condition, coded current interrupted at the rate of 30 times per minute is supplied to primary winding 24 of transformer WT, so that this current is supplied to the rails of section 4—5 by secondary winding 22. The circuit for primary winding 24 may be traced over a path which passes from terminal BX, through contact 30 of motor coder 4CD, back point of contact 26 of relay 4J, front contact 27 of relay 4WF and primary winding 24 to terminal CX.

It will be noted that an auxiliary circuit is provided for supplying 30 code current to the rails of section 4—5, which circuit includes back point of contact 28 of relay 4H and front point of contact 26 of relay 4J. This auxiliary circuit insures that, if relay 4H should become released when it should be picked up, energy will not be disconnected entirely from the rails of section 4—5 but instead 30 code current will be supplied thereto to keep traffic moving. Each of the other locations is also provided with an auxiliary circuit similar to that just described for location 4.

Primary winding 12 of transformer 5P is receiving energy over back contacts 32 and 33 of relay 5EF, with the result that code following track relay 5TR is operating at the rate of 30 times per minute. Since relay 5/TR is following 30 code, both relays 5H and 5J are energized but distant relay 5D is deenergized. With the apparatus at location 5 in this condition, primary winding 24 of transformer 5WT is supplied with coded energy interrupted at the rate of 120 times per minute, so that secondary winding 22 supplies the rails of section 5—6 with current of 120 code. The circuit for supplying coded energy to winding 24 of transformer 5WT may be traced over a path which passes from terminal BX, through contact 120 of motor coder 5CD, back point of contact 31 of relay 5D, front point of contact 34 of relay 5H, front point of contact 35 of relay 5J, front contact 36 of relay 5WF and primary winding 24 to terminal CX. Simultaneously with the supply of 120 code to the rails of section 5—6, coded current interrupted at the rate of 180 times per minute is also supplied to primary winding 24 of track transformer 6WT, so that its secondary winding 22 supplies such coded current to the rails of section 6—7. The circuit for supplying 180 code to winding 24 of transformer 6WT may be traced over a path which passes from terminal BX, through contact 180 of motor coder 5CD, back point of contact 37 of relay 5D, wire 38, front point of contact 39 of relay 5WF, line conductor 40, wire 41, front contact 42 of relay 6WF, wire 43, front point of contact 44 of relay 6D, front point of contact 45 of relay 6H, front point of contact 46 of relay 6J, front contact 47 of relay 6WF and winding 24 of transformer 6WT to terminal CX. Primary winding 12 of transformer 6P is connected across the rails of section 5—6 by back contacts 50 and 51 of traffic relay 6EF, so that code following track relay 6TR is receiving code energy interrupted at the rate of 120 times per minute. As a result relay 6D is energized so that coded energy interrupted at the rate of 270 times per minute is supplied to primary winding 24 of transformer 7WT to produce 270 code in the rails of section 7—8. The circuit for supplying 270 code to primary winding 24 of transformer 7WT may be traced over a path which passes from terminal BX, through contact 270 of motor coder 6CD, front point of contact 52 of relay 6D, wire 53, front contact 54 of relay 6WF, line conductor 55, wire 56, front contact 57 of relay 7WF, wire 58, front point of contact 59 of relay 7D, front point of contact 60 of relay 7H, front point of contact 61 of relay 7J, front contact 62 of relay 7WF and

winding 24 of transformer 7WT to terminal CX. Primary winding 12 of transformer 7P is connected across the rails of section 6—7 by back contacts 64 and 65 of traffic relay 7EF, so that track relay 7TR is following 180 code. As a result, distant relay 7D is in its energized condition to supply 270 code to the rails of the section immediately to the right of location 8 over a circuit similar to that just traced for primary winding 24 of transformer 7WT. Primary winding 12 of transformer 8P is connected across the rails of section 7—8 by back contacts 66 and 67 of relay 8EF, so that the code following track relay 8TR is following 270 code to condition the apparatus at location 8 to supply 270 code for the section next in rear of the section immediately to the right of location 8.

From the foregoing description it will be seen that when the apparatus is conditioned for traffic in one direction, four successive sections to the rear of an occupied section will be supplied with 30, 120, 180 and 270 code, respectively. The coded trackway currents may be utilized in any well-known manner to control train carried governing means, such, for example, as cab signals or similar apparatus.

When lever L is reversed to pick up traffic relays EF and release traffic relays WF, the apparatus embodying my invention will operate for eastbound traffic in a manner similar to that just described for westbound traffic. Assuming, for example, that the eastbound traffic relays EF are energized and the westbound traffic relays WF are deenergized, it will be seen that the track relays TR will receive energy from the rails of the right-hand section at each location, and the rails of the left-hand section at each location will be supplied with coded energy. Taking relay 6TR for convenience, and assuming that relay 6WF is deenergized, it will be plain that the closing of back contacts 70 and 71 of relay 6WF will supply coded energy from the rails of section 6—7 to code following relay 6TR. Under this condition, that is, with the apparatus set up for eastbound traffic, primary winding 23 of transformer 7ET will be supplied with coded energy, so that the rails of section 6—7 will carry such coded energy to govern the relay 6TR and to govern the train carried means. The circuit for supplying coded energy to primary winding 23 of transformer 7ET may be traced over a path which passes from terminal BX at location 8, through contact 270 of motor coder 8CD, front point of contact 72 of relay 8D, wire 73, front contact 74 of traffic relay 8EF, line conductor 75, wire 76, front contact 77 of relay 7EF, wire 78, wire 58, front point of contact 59 of relay 7D, front point of contact 60 of relay 7H, front point of contact 61 of relay 7J, front contact 79 of relay 7EF and winding 23 of transformer 7ET. From the description given for supplying coded currents to the rails of section 6—7 for eastbound movements, it is believed that it will be apparent how such currents are supplied to the other sections, because the apparatus at each location is identical to the apparatus at each of the other locations.

Although I have herein shown and described only one form of apparatus embodying my invention, it is understood that various changes and modifications may be made therein within the scope of the appended claims without departing from the spirit and scope of my invention.

Having thus described my invention, what I claim is:

1. In combination, a stretch of railway track divided into a plurality of successive track sections, a home relay and a distant relay for each section, means for supplying the rails of each section with coded currents of four distinctive characteristics respectively according as the home relay for the section next in advance is deenergized or said home relay is energized and the distant relay for said advance section is deenergized or said home and distant relays are both energized and the distant relay for the section second in advance is deenergized or said home and distant relays for the section next in advance and said distant relay for the section second in advance are all energized, a code following track relay for each section, and means governed by each code following track relay for selectively controlling the associated home and distance relays.

2. In combination, a stretch of railway track divided into a plurality of successive track sections, a home relay and a distant relay for each section, means including a back contact of the home relay associated with the section next in advance for supplying the rails of each section with coded current of one characteristic, means including a front contact of the said home relay and a back contact of the distant relay associated with the section next in advance for supplying the rails of each section with coded current of another characteristic, means including a front contact of each of said relays and a back contact of the distant relay associated with the section second in advance for supplying the rails of each section with coded current of still another characteristic, means including a front contact of each of the home and distant relays for said section next in advance as well as of the distant relay for said section second in advance for supplying the rails of each section with coded current of still a different characteristic, a code following track relay for each section, and means governed by each code following track relay for energizing the associated home relay whenever any one of said four coded currents is present but for energizing the associated distant relay when and only when one or another of the last three of said coded currents is present.

3. In combination, a stretch of railway track divided into a plurality of successive track sections, a home relay and a distance relay for each section, means including a back contact of each home relay for supplying the rails of the section next in rear with coded current of one characteristic, means including a front contact of each home relay and a front contact of each distant relay for supplying the rails of the section next in rear with coded current of another characteristic, means including a back contact of each distant relay and a line conductor as well as a front contact of each home and distant relay for the section next in rear for supplying the rails of the section second in rear with coded current of still another characteristic, means including a front contact of each distant relay and a line conductor as well as a front contact of each home and distant relay for the section next in rear for supplying the rails of the section second in rear with coded current of still a different characteristic, a code following track relay for each section, and means governed by each track relay for selectively controlling the associated home and distant relays.

4. A coded railway traffic controlling system comprising a stretch of railway track divided into a plurality of successive track sections, means effective when one section is occupied to supply the rails of the section first in rear of said occupied section with coded current of one characteristic, means then effective to supply the rails of the section second in rear of said occupied section with coded current of another characteristic, means including a line conductor and then effective to supply the rails of the section third in rear of said occupied section with coded current of still another characteristic, and means including a line conductor and then effective to supply the rails of the section fourth in rear of said occupied section with coded current of still a different characteristic.

5. In combination, a stretch of railway track divided into a plurality of successive track sections, a home relay and a distant relay for each section, a line conductor for each section, means for supplying the rails of each section with coded current of one characteristic and including a back contact of the home relay for the section next in advance, means for supplying the rails of each section with coded current of another characteristic and including a front contact of the home relay for the section next in advance as well as a back contact of the distant relay for the section next in advance, means for supplying the rails of each section with coded current of still another characteristic and including a front contact of each of the home and distant relays for the section next in advance as well as the line conductor for said advance section and a back contact for the distant relay for the section second in advance, means for supplying the rails of each section with coded current of still a different characteristic and including a front contact of each of the home and distant relays for the section next in advance as well as the line conductor for said advance section and a front contact for the distant relay for the section second in advance, a code following track relay for each section, and means governed by each code following track relay for energizing the associated home signal whenever any one of said four coded currents is present but for energizing the associated distant relay when and only when one or another of the last three of said coded currents is present.

6. In combination, a forward and an intermediate as well as a rear section of railway track, means for supplying the rails of the forward section with coded energy periodically interrupted at a first rate or a second rate or a third rate or a fourth rate in accordance with traffic conditions in advance, a code following relay receiving energy from the rails of said forward section, a home relay and a distant relay for said forward section, means for energizing said home relay when said code following relay is receiving energy of any one of said four rates, means for energizing said distant relay when and only when said code following relay is receiving energy of the last three of said four rates, means effective when said home relay is deenergized for supplying the rails of the intermediate section with energy of said first rate, means effective when said home relay is energized and said distant relay is deenergized to supply the rails of the intermediate section with energy of said second rate, means also effective when said distant relay is deenergized to supply the rails of the rear section with energy of said third rate, and means effective when said distant relay is energized to supply the rails of said rear section with energy of said fourth rate.

7. In combination, a forward and an intermediate as well as a rear section of a railway track, means for supplying the rails of the forward section with coded energy periodically interrupted at a first rate or a second rate or a third rate or a fourth rate in accordance with traffic conditions in advance, a code following relay receiving energy from the rails of said forward section, a home relay and a distant relay for said forward section, means for energizing said home relay when said code following relay is receiving energy of any one of said four rates, means for energizing said distant relay when and only when said code following relay is receiving energy of the last three of said four rates, means effective when said home relay is deenergized for supplying the rails of the intermediate section with energy of said first rate, means effective when said home relay is energized and said distant relay is deenergized to supply the rails of the intermediate section with energy of said second rate, a distant relay for the intermediate section, means for energizing said distant relay when the intermediate section is unoccupied and the rails thereof are supplied with energy of said second or third or fourth rates, and means effective when the distant relay for said intermediate section is energized for supplying the rails of the rear section with energy of said third and fourth rates according as the distant relay for the forward section is deenergized or energized respectively.

8. In combination, a stretch of railway track divided into a plurality of successive track sections, means including a line conductor for supplying the rails of each section with coded current of one characteristic when and only when at least three sections next in advance are unoccupied, means including a line conductor for supplying the rails of each section with coded current of another characteristic when and only when two sections next in advance are unoccupied, means for supplying the rails of each section with coded current of still another characteristic when and only when one section next in advance is unoccupied, and means for supplying the rails of each section with coded current of still a different characteristic when and only when the section next in advance is occupied.

9. In combination with a pair of adjacent sections of railway track, a track relay and a pair of directional relays at the junction of said sections, means for selectively controlling said directional relays to establish the direction of traffic through said sections, a source of track circuit current adjacent said junction, a pair of line wires one for each direction and each supplied with energy at times from a source remote from said junction, means controlled by said directional relays for effectively connecting said track relay with the rails of one or the other of said sections in accordance with the direction of traffic established, and means also controlled by said directional relays for effectively connecting the rails of the section not connected with the track relay to the local source or to the line wire for the direction established depending upon traffic conditions.

10. In combination with a pair of adjacent track sections of railway track, a track relay and a pair of directional relays at the junction of said sections, means for selectively controlling said directional relays to establish the direction

of traffic through said sections, a source of track circuit current of one character adjacent said junction, a pair of line wires one for each direction and each at times supplied from a source remote from said junction with current of a character different from the local source, means controlled by said directional relays for effectively connecting said track relay with the rails of one or the other of said sections in accordance with the direction of traffic established, and means also controlled by said directional relays for effectively connecting the rails of the section not connected with the track relay to the local source or to the line wire for the direction established depending upon traffic conditions.

11. In combination with a pair of adjacent sections of railway track, a track relay and a pair of directional relays at the junction of said sections, means for selectively controlling said directional relays to establish the direction of traffic through said sections, a source of track circuit current adjacent said junction, a pair of line wires one for each direction and each supplied with energy at times from a source remote from said junction, means controlled by said directional relays for effectively connecting said track relay with the rails of one or the other of said sections in accordance with the direction of traffic established, circuit means also controlled by said directional relays and effectively connected to the rails of the section not connected with the track relay, and means including said track relay for selectively supplying current to said circuit means from said local source or the line wire for the direction established in accordance with traffic conditions in advance of the track relay.

12. In combination with a pair of adjacent sections of railway track, a track relay and a pair of directional relays at the junction of said sections, means for selectively controlling said directional relays to establish the direction of traffic through said sections, a source of track circuit current adjacent said junction, a pair of line wires one for each direction and each supplied with energy at times from a source remote from said junction, means controlled by said directional relays for effectively connecting said track relay with the rails of one or the other of said sections in accordance with the direction of traffic established, circuit means also controlled by said directional relays and connected to the rails of the section not connected with said track relay, an auxiliary relay, means including said track relay for controlling said auxiliary relay in accordance with traffic conditions in advance of said track relay, and means governed by said auxiliary relay for selectively supplying current to said circuit means from said local source or the line wire for the direction established.

13. In combination with a pair of adjacent sections of railway track, a track relay and a pair of directional relays at the junction of said sections, means for selectively controlling said directional relays to establish the direction of traffic through said sections, a source of track circuit current adjacent said junction, a pair of line wires one for each direction and each supplied with energy at times from a source remote from said junction, means controlled by said directional relays for effectively connecting said track relay with the rails of one or the other of said sections in accordance with the direction of traffic established, circuit means also controlled by said directional relays and connected to the rails of the section not connected with said track relay, a plurality of auxiliary relays, means including said track relay for controlling said plurality of relays in accordance with traffic conditions in advance of the track relay, and means governed by said plurality of auxiliary relays for selectively supplying current to said circuit means from said local source or the line wire for the direction established.

14. In combination with a pair of adjacent sections of railway track, a track relay and a pair of directional relays at the junction of said sections, means for selectively controlling said directional relays to establish the direction of traffic through said stretch, means controlled by said directional relays for effectively connecting said track relay to the rails of one or the other of said track sections depending upon the direction of traffic established, means for supplying the rails at the other end of the section to which said track relay is connected with currents of different characteristics in accordance with traffic conditions in advance, means controlled by said track relay and selectively responsive to said different characters of current, a pair of line wires one for each direction, means also governed by said directional relays for effectively connecting the wire for the direction established with the rails of the section to which the track relay is not connected, means for supplying said line wire with currents of different characteristics respectively in accordance with other traffic conditions in advance, and means controlled by said directional means to supply the unconnected line wire with currents of different characteristics in accordance with the condition of said selective means to govern other traffic controlling apparatus to the rear.

15. In combination, a stretch of railway track divided into a plurality of successive track sections, a track relay and a pair of directional relays at the junction of each two adjacent sections, means for selectively controlling said directional relays for establishing the direction of traffic through the stretch, means governed by each pair of directional relays for effectively connecting the corresponding track relay to the rails of one or the other of the associated sections depending upon the direction of traffic established, a pair of line conductors for each junction one extending in each direction, means also controlled by said directional relays for effectively connecting the associated line wire for the direction established to the rails of the section to which the track relay is not connected, and means also controlled by said directional relays and by said track relays for supplying the associated line wire for the opposite direction with current of different characteristics in accordance with traffic conditions in advance.

16. In combination, a steretch of railway track divided into a plurality of successive track sections, a track relay and a pair of directional relays at the junction of each two adjacent sections, means for selectively controlling said directional relays for establishing the direction of traffic through the stretch, means governed by each pair of directional relays for effectively connecting the corresponding track relay to the rails of one or the other of the associated sections depending upon the direction of traffic established, a pair of line conductors for each junction one extending in each direction, means also controlled by said directional relays for effectively connecting the associated line wire for the direc-

tion established to the rails of the section to which the track relay is not connected, means governed by each track relay and by the corresponding directional relays for supplying the rails of the adjacent section to which the track relay is not connected with a local source of currents of different characteristics respectively or for disconnecting said local source from said rails and connecting thereto the associated line conductor for the direction established in accordance with the condition of said track relay, and means governed by each track relay and by the corresponding directional relays for supplying the associated line conductor for the other direction with currents of other different characteristics respectively in accordance with the condition of said track relay.

17. A coded railway traffic governing system for a stretch of railway track divided into a plurality of successive track sections comprising a code following track relay at the junction of each two adjacent sections, a pair of directional relays at the junction of each two adjacent sections, means for selectively controlling each pair of directional relays to establish the direction of traffic through the stretch, a home and a distant relay at the junction of each two adjacent sections, means controlled by said directional relays for connecting the corresponding track relay to one or the other of the associated sections depending upon the direction established, means governed by the directional relays for supplying the rails of the associated section with coded energy of a first rate or a second rate according as the home relay is deenergized or the distant relay is deenergized and the home relay is energized, a pair of line wires at each junction one for each direction, means controlled by the directional relays for effectively connecting the line for the direction established to the rails of the associated section to which the track relay is not connected provided both corresponding home and distant relays are energized, means governed by said directional means for supplying the associated line wire for the opposite direction with coded current of a third rate or a fourth rate according as the corresponding distant relay is deenergized or energized respectively, and means controlled by each track relay for energizing the associated home relay when the track relay is receiving current coded at any of said rates but for energizing the associated distant relay when and only when said track relay is receiving current coded at the last three of said rates.

18. A coded railway traffic controlling system comprising, in combination, a railway track divided into a plurality of successive block sections, a line wire coextensive with said track and divided into sections corresponding to said block sections, at the junction of each of said block sections of railway track, a track relay, current supply means capable of supplying coded energy of a plurality of different characters, and direction control means having a normal condition and a reverse condition and being operative in the normal condition to connect the associated track relay to the track rails of the block section at one side of said junction, to establish a circuit through which coded energy may be supplied to the track rails of the track section at the other side of the junction by the current supply means at said junction or through which current supplied by a supply device to the line wire of the track section at said one side of said junction may be supplied to the track rails of the track section at said other side of said junction, and to also establish a circuit through which coded energy may be supplied from said current supply means at said junction to the line wire of the block section on the other side of said junction, said direction control means being operative in the reverse condition to connect the associated track relay to the track rails of the block section at said other side of said junction, to establish a circuit through which coded energy may be supplied to the track rails of the block section at said one side of said junction by the current supply means at said junction or through which current supplied by a supply device to the line wire of the track section at said other side of said junction may be supplied to the track rails of the track section at said one side of said junction, and to also establish a circuit through which coded energy may be supplied from the current supply means at said junction to the line wire of the track section at said one side of said junction.

19. A coded railway traffic controlling system comprising, in combination, a stretch of railway track divided into a plurality of successive block sections, a line wire coextensive with said track stretch and divided into sections corresponding to said block sections, at the junction of each of said block sections of track, a track relay, current supply means capable of supplying coded energy of a plurality of different characters, and direction control means having a normal condition in which it conditions the track stretch for movement of trains in one direction and a reverse condition in which it conditions the track stretch for movement of trains in the other direction, the direction control means being operative in either condition to connect the associated track relay to the track rails of the block section in advance of said junction, to establish a circuit through which coded energy may be supplied to the track rails of the block section at the rear of said junction by the current supply means at said junction or through which current supplied by a supply device to the line wire of the block section in advance of said junction may be supplied to the track rails of the track section at the rear of said junction, and to also establish a circuit through which coded energy may be supplied by the current supply means at said junction to the line wiire of the block section at the rear of said junction.

20. A coded railway traffic controlling system comprising, in combination, a stretch of railway track divided into a plurality of successive block sections, a line wire coextensive with said track stretch and divided into sections corresponding to said block sections, at the junction of each of said block sections of track, a track relay, current supply means capable of supplying coded energy of four different characters, and direction control means having a normal condition in which it conditions the track stretch for movement of trains in one direction and a reverse condition in which it conditions the track stretch for movement of trains in the other direction, the direction control means being operative in either condition to connect the associated track relay to the track rails of the block section in advance of said junction, to establish a circuit through which coded current of either of two characters furnished by the current supply means at said junction or through which coded current of either of the other two characters supplied by a supply device to the line wire of the block section in advance of said junction may be supplied to the

track rails of the block section at the rear of said junction, and to also establish a circuit through which coded current of either of the other of the two characters furnished by the current supply means at said junction may be supplied to the line wire of the block section in the rear of said junction.

21. A coded railway traffic controlling system comprising, in combination, a stretch of railway track divided into a plurality of successive block sections, a line wire coextensive with said track stretch and divided into sections corresponding to said block sections, at the junction of each of said block sections of track, a track relay, current supply means capable of supplying coded energy of a plurality of different characters, and direction control means having a normal condition in which it conditions the track stretch for movement of trains in one direction and a reverse condition in which it conditions the track stretch for movement of trains in the other direction, the direction control means being operative in either condition to connect the associated track relay to the track rails of the block section in advance of said junction, to establish a circuit through which coded current of certain characters furnished by the current supply means at said junction may be supplied to the line wire of the block section in the rear of said junction, and to also establish a circuit through which coded current of other characters furnished by the current supply means at said junction or current supplied by current supply means to the line wire of the block section in advance of said junction may be supplied to the track rails of the block section at the rear of said junction, the equipment at each junction including means selectively responsive to the character of coded current supplied to the track relay at said junction for determining whether current is supplied to the track rails of the block section in the rear of said junction from the current supply means at said junction or from the line wire of the block section in advance of said junction.

22. A coded railway traffic controlling system comprising, in combination, a stretch of railway track divided into a plurality of successive block sections, a line wire coextensive with said track stretch and divided into sections corresponding to said block sections, at the junction of each of said block sections of track, a track relay, current supply means capable of supplying coded energy of a plurality of different characters, and direction control means having a normal condition in which it conditions the track stretch for movement of trains in one direction and a reverse condition in which it conditions the track stretch for movement of trains in the other direction, the direction control means being operative in either condition to connect the associated track relay to the track rails of the block section in advance of said junction, to establish a circuit through which coded current of either of certain characters furnished by the current supply means at said junction or coded current supplied by current supply means to the line wire of the block section in advance of said junction may be supplied to the track rails of the block section at the rear of said junction, and to also establish a circuit through which coded current of either of two of the other characters furnished by the current supply means at said junction may be supplied to the line wire of the block section in the rear of said junction, the equipment at each junction including means selectively responsive to the character of coded current supplied to the track relay at said junction for determining which of the two characters of coded current is supplied to the line wire of the block section in the rear of said junction.

23. A coded railway traffic controlling system comprising, in combination, a stretch of railway track divided into a plurality of successive block sections, a line wire coextensive with said track stretch and divided into sections corresponding to said block sections, at the junction of each of said block sections of track, a track relay, current supply means capable of supplying coded energy of a plurality of different characters, and direction control means having a normal condition in which it conditions the track stretch for movement of trains in one direction and a reverse condition in which it conditions the track stretch for movement of trains in the other direction, the direction control means being operative in either direction to connect the associated track relay to the track rails of the block section in advance of said junction, to establish a circuit through which coded current of either of certain characters furnished by the current supply means at said junction may be supplied to the line wire of the block section in the rear of said junction, and to also establish a circuit through which coded current of either of two of the other characters furnished by the current supply means at said junction or current supplied by current supply means to the line wire of the block section in advance of said junction may be supplied to the track rails of the block section at the rear of said junction, the equipment at each junction including means selectively responsive to the character of the current supplied to the track relay at said junction for determining which of the two characters of coded current is supplied by the current supply means at said junction to the track rails of the block section at the rear of said junction.

24. A coded railway traffic controlling system comprising, in combination, a stretch of railway track divided into a plurality of successive block sections, a line wire coextensive with said track stretch and divided into sections corresponding to said block sections, at the junction of each of said block sections of track, a track relay, current supply means capable of supplying coded energy of a plurality of different characters, direction control means having a normal condition in which it conditions the track stretch for movement of trains in one direction and a reverse condition in which it conditions the track stretch for movement of trains in the other direction, the direction control means being operative in either condition to connect the associated track relay to the track rails of the block section in advance of said junction, to establish a circuit through which coded current of any one of certain characters furnished by the current supply means at said junction or coded current supplied by current supply means to the line wire of the block section in advance of said junction may be supplied to the track rails of the block section at the rear of said junction, and to also establish a circuit through which coded current of any one of the other characters furnished by the current supply means at said junction may be supplied to the line wire of the block section in the rear of said junction, and common means for effecting operation of all of the direction control means at the junctions in said track stretch to condition the

track stretch for movement of trains in one direction or the other.

25. A coded railway traffic controlling system comprising, in combination, a stretch of railway track divided into a plurality of successive block sections, a line wire coextensive with said track stretch and divided into sections corresponding to said block sections, at the junction of each of said block sections of track a code following relay energized from the track rails of the block section in advance of said junction, current supply means capable of supplying coded energy of a plurality of different characters, means responsive to the supply of current to said code following relay for determining which one of certain characters of coded current supplied by said current supply means is supplied to a circuit through which current may be supplied to the track rails of the adjacent block section in the rear, and means selectively responsive to the character of coded current supplied to said code following relay for determining whether current is supplied to the track rails of the adjacent block section in the rear from said circuit or whether current supplied by current supply means to the line wire of the adjacent block section in advance of said junction is supplied to the track rails of the adjacent block section in the rear, and for also determining which one of the other characters of coded current supplied by said current supply means is supplied to the line wire of the block section in the rear of said junction.

CHARLES W. FAILOR.