E. F. HOPKINS.

POWER GENERATING APPARATUS.

APPLICATION FILED NOV. 28, 1910.

**1,031,118.**

Patented July 2, 1912.

3 SHEETS—SHEET 1.

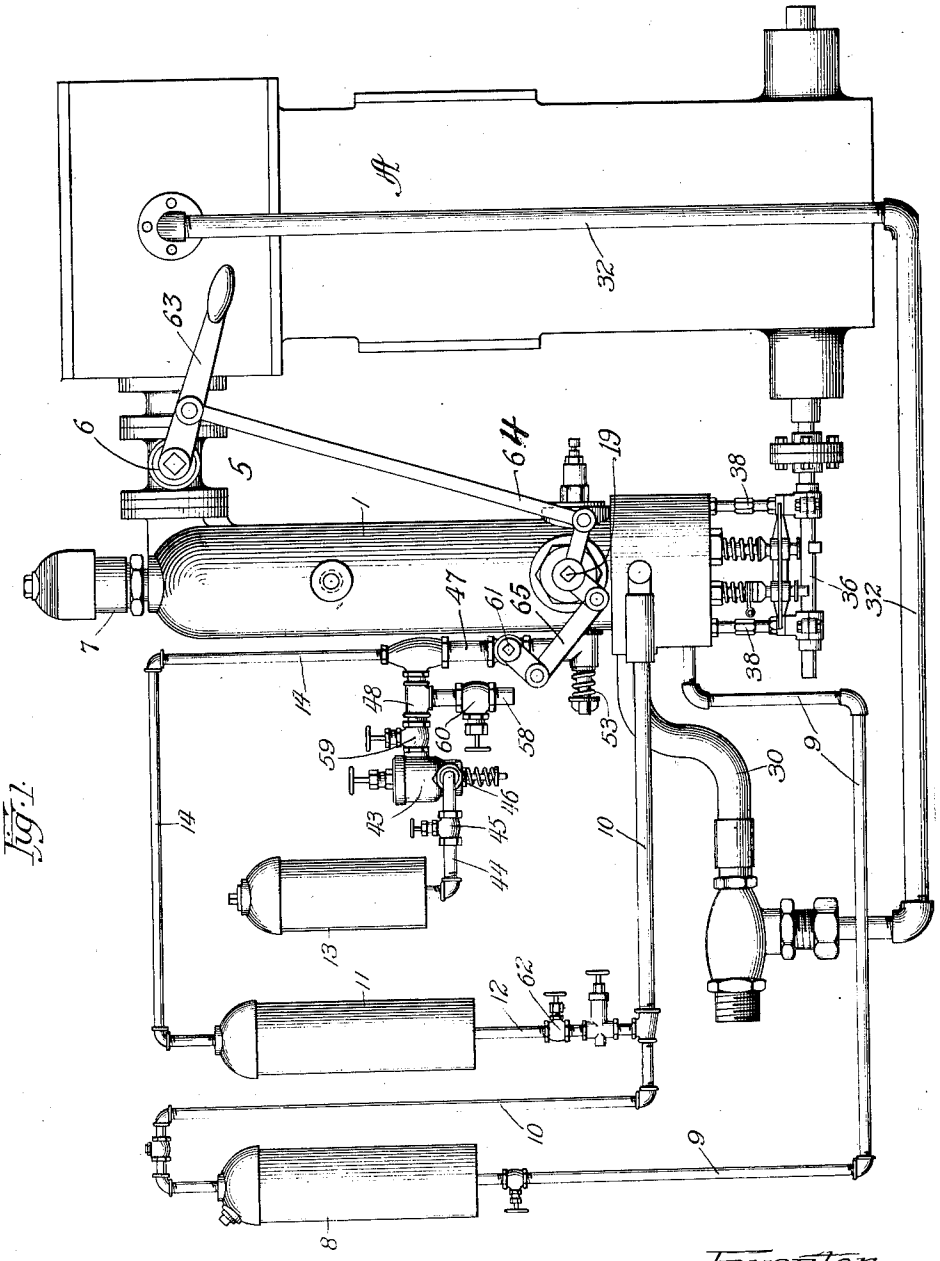


Fig. 1.

Witnesses:
Robert H. Weir
C. Paul Parker.

Inventor
Ezra F. Hopkins,
by Luther L. Miller
Atty.

E. F. HOPKINS.

POWER GENERATING APPARATUS.

APPLICATION FILED NOV. 28, 1910.

**1,031,118.**

Patented July 2, 1912.

3 SHEETS—SHEET 2.

Fig. 2.

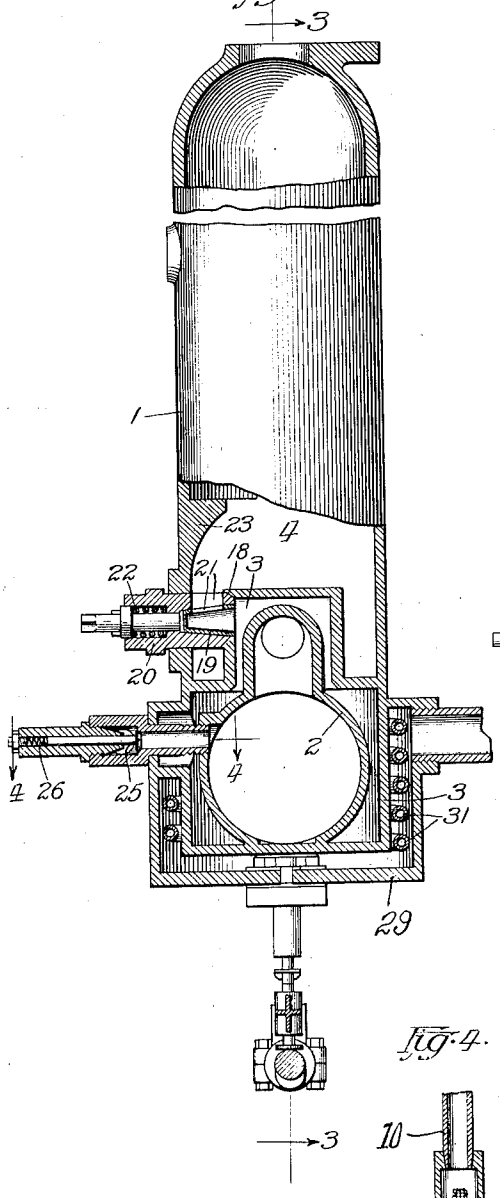


Fig. 3.

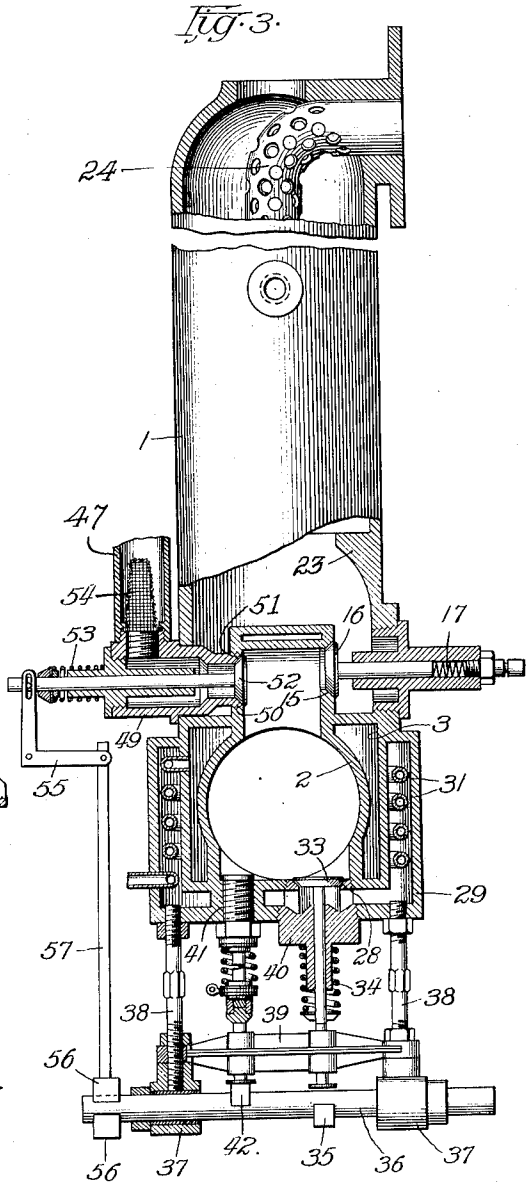


Fig. 4.

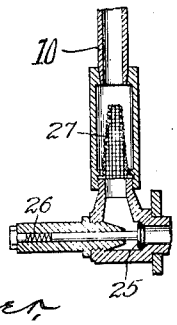


Witnesses:

Robert N. Weir

C. Paul Parker.

Inventor

Ezra F. Hopkins

by Luther L. Miller

Atty.

E. F. HOPKINS.

POWER GENERATING APPARATUS.

APPLICATION FILED NOV. 28, 1910.

**1,031,118.**

Patented July 2, 1912.

3 SHEETS—SHEET 3.

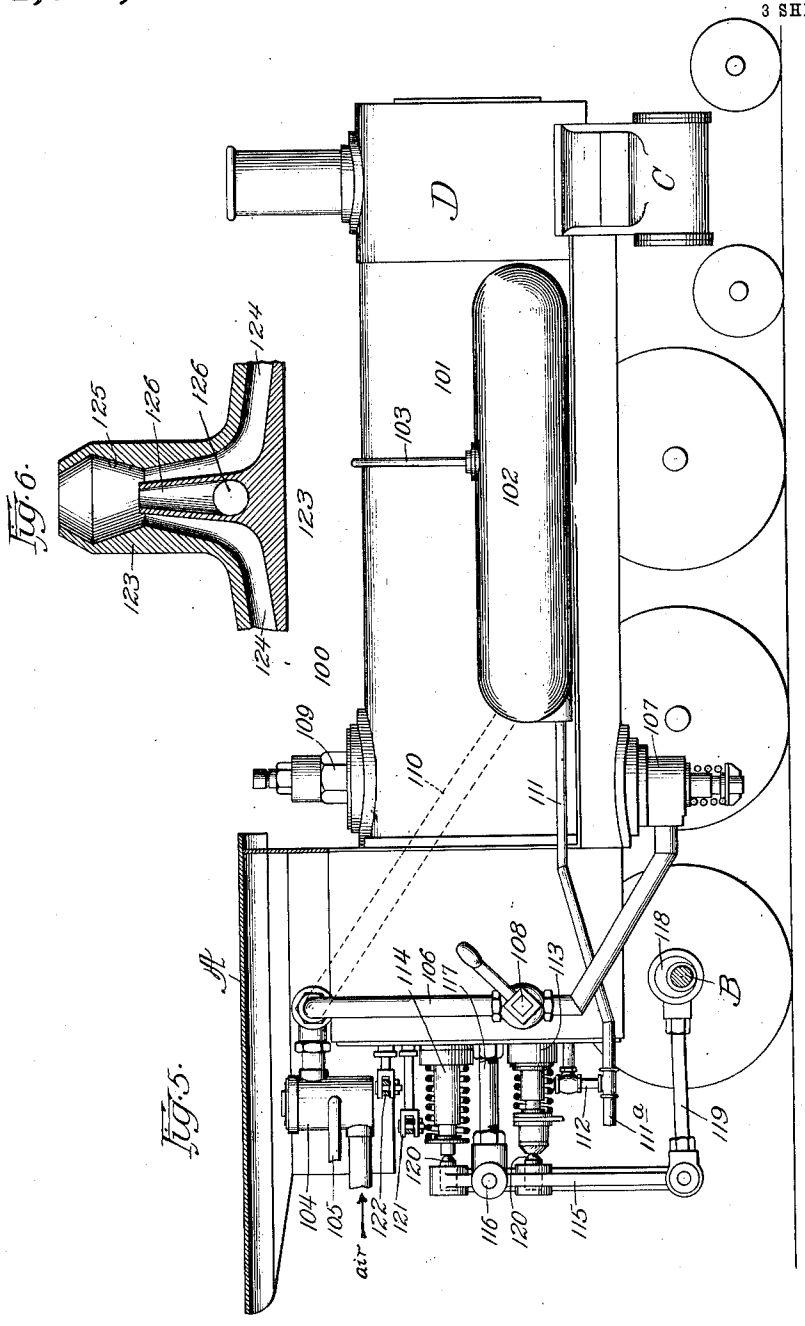


Witnesses:

Robert N. Wells

C. Paul Parker,

Inventor

Ezra F. Hopkins,

by Luther L. Miller

Atty

# UNITED STATES PATENT OFFICE.

EZRA F. HOPKINS, OF CHICAGO, ILLINOIS.

## POWER-GENERATING APPARATUS.

1,031,118. Specification of Letters Patent. Patented July 2, 1912.

Application filed November 28, 1910. Serial No. 594,420.

*To all whom it may concern:*

Be it known that I, EZRA F. HOPKINS, a citizen of the United States, residing at Chicago, in the county of Cook and State of Illinois, have invented certain new and useful Improvements in Power-Generating Apparatus, of which the following is a specification.

This invention relates to an apparatus for generating an expansible or elastic fluid which may be used for actuating prime movers.

The object of the invention is to produce an apparatus of this character by which a fluid may be generated which has all of the expansive properties of super-heated steam, without the disadvantages, complications and losses of a steam generating plant of the ordinary type.

In the accompanying drawings, Figure 1 is a diagrammatic view of an apparatus embodying the features of my invention. Fig. 2 is a section through a portion of the apparatus taken in the plane of line 2—2 of Fig. 1. Fig. 3 is a section on line 3—3 of Fig. 2. Fig. 4 is a sectional detail view of one of the valves and associated parts. Fig. 5 is a side elevation of a railroad locomotive embodying my invention. Fig. 6 is a sectional view of the exhaust means.

In Fig. 1 I have shown by way of example one form of apparatus embodying my invention, but I wish to have it understood that the invention is capable of various modifications, and I do not, therefore, limit the invention to the form and arrangement herein shown and described.

In carrying out my invention, I may provide a supply tank arranged to hold a suitable quantity of liquid or gaseous fuel, and a combustion chamber into which is fed a charge of the fuel, the charge being ignited by suitable means, such as a spark plug. I also provide a water supply tank, and a water compartment positioned adjacent to the combustion chamber and adapted to receive water from the water supply tank. The expansive fluid to be used for driving the engine is generated by bringing together a suitable quantity of water from the water compartment above mentioned, and the hot gases from the combustion chamber, the water absorbing the heat from the hot gases, and being thereby turned into steam and mingling with said gases to produce a highly elastic fluid. A suitable reservoir is positioned adjacent the water compartment and the combustion chamber, adapted to receive and store this expansive fluid until it is to be used.

Referring to Figs. 1, 2 and 3, A indicates a steam engine of any common or preferred type. The present embodiment of my invention comprises a casing 1 of any suitable form, said casing having a combustion chamber 2 in one end (in this instance the lower end of the casing, since said casing is in an upright position). Surrounding the combustion chamber 2 is a compartment 3 for holding a quantity of water. The upper portion of the casing serves as a main reservoir 4 for the generated expansive fluid, and communicates with the engine A through a connection 5 having a throttle valve 6 therein.

7 is a safety blow-off valve of any preferred construction.

A water supply tank 8 is connected with the compartment 3 through the medium of a pipe 9, and the water is arranged to be forced from the tank 8 by pressure of gases flowing from the combustion chamber 2 through a pipe 10.

11 is a storage tank for such gases, said tank being connected with the pipe 10 by a pipe 12. The supply of fuel may be carried in a tank 13 which is connected with the combustion chamber through a suitable mixing valve to be presently described. The gas storage tank 11 communicates through a pipe 14 with the combustible fluid inlet to the explosion chamber, the force of gas flowing from said tank 11 drawing the fuel from the tank 13 and carrying it therewith into the combustion chamber.

The combustion chamber 2 communicates with the main storage reservoir 4 through an opening 15 (Fig. 3) the flow of gases through said opening being controlled by a valve 16 which is normally held closed by means of a suitable spring 17. The water compartment 3 communicates with the main reservoir through an opening 18 (Fig. 2) which is controlled by a hollow conical valve member 19. The valve member 19 in the present instance is mounted in a member 20 extending through the wall of the casing 1 and into the opening 18 between the water compartment 3 and the main reservoir. The valve member 19 and the member 20 have slots 21 therein adapted to be brought into register to a greater or less extent by turn-

ing the valve member 19, thereby controlling the passage of water from the water compartment 3 into the main reservoir. A coiled spring 22 is arranged to hold the valve member 19 to its seat. The hot gases from the combustion chamber upon coming in contact with the water flowing through the valve 19, to convert the water into steam, and the steam and gases become intermingled to form the desired elastic fluid. In order to direct the hot gases and the water together in the reservoir 4 I may provide suitable deflectors 23 on the wall of the reservoir adapted to deflect the water flowing through the valve 19 and the hot gases toward the center of the reservoir.

It may be desirable to provide a tubular screen 24 in the upper portion of the reservoir 4 to obtain a thorough mixture of the steam and gases before they pass to the engine. The end of the screen will be closed so that the steam and gases flow through the openings in the wall of the screen and mix together in the interior thereof. The quality or chemical composition of the elastic fluid in the main reservoir 4 can be regulated by changing the frequency of the explosions, and by controlling the flow of steam and water into the reservoir 4 through the valve 19. The opening 18 and valve 19 are positioned at the highest portion of the water compartment 3.

At each explosion in the combustion chamber 2 the valve 16 is opened to permit the flow of gas from the combustion chamber as described. A portion of the gas passes from the combustion chamber 2 into the gas storage tank 11 through the pipes 10 and 12, as hereinbefore described. The flow of gases into said pipes is controlled by a check valve 25 (Figs. 2 and 4) arranged to be normally held seated by a suitable spring 26. Referring to Fig. 4, a screen 27 may be fixed in position in the pipe 10 adjacent the valve 25 to prevent the flames from the combustion chamber 2 from traveling very far into said pipe 10.

The pressure within the outer system of pipes and tanks is automatically kept higher than the pressure within the main reservoir 4 in order to permit the water in the water compartment 3 to be forced through the valve 19 into the main reservoir 4 by the pressure in the outer portion of the system and against the pressure within said main reservoir. In the present instance, the relative size of the valve members 16 and 25 and the relative tension of the springs 17 and 26 are such that the valve 16 will close before the valve 25. This sequence of closing of these valves tends to maintain a higher pressure in the main reservoir 4 than in the outer portion of the system, but the elastic fluid within the reservoir 4 is constantly cooling and contracting and said fluid is also being constantly drawn off by the engine, so that the average pressure in the reservoir is lower than that in the outer pipes, etc. It will be understood that in practice the size of the main reservoir 4 and that of the cylinder of the engine A will always be properly proportioned.

The exhaust gases from the combustion chamber are conducted through an opening 28 into a chamber 29 surrounding the water compartment 3, said gases escaping from the chamber 29 through a pipe 30. Within the chamber 29 is a coil of pipe 31 through which the water flows before passing into the water compartment 3. The exhaust gases in passing through the chamber 29 heat the water in the coil 31. If desired, the exhaust outlet from the cylinder of the engine A may be connected through the medium of a pipe 32 with the pipe 30 in order that the exhaust from the combustion chamber 2 shall operate to decrease back pressure upon the engine.

The opening 28 from the combustion chamber 2 is controlled by an exhaust valve 33, said valve being normally held seated by a coiled spring 34. The valve 33 is arranged to be opened periodically by means of a cam projection 35 upon a rotary shaft 36, said shaft 36 being driven by any suitable means as from the shaft of the engine A. The shaft 36 may be mounted in bearings 37 carried at the lower ends of suspension members 38 secured to the casing 1. 39 is a guide member in which the stem of the valve 33 is slidably mounted, the upper portion of said stem being mounted in a bushing 40 seated in one wall of the chamber 29 of the casing.

The means for igniting a charge within the combustion chamber comprises in the present instance a spark plug 41 of any suitable construction, preferably of the make-and-break type, the plug being arranged to be actuated by means of a cam 42 upon the shaft 36.

I will now describe the means for injecting a charge into the combustion chamber 2. The fuel supply tank 13 communicates with a mixing valve 43 of any suitable construction, through the medium of a pipe 44, said pipe having a controlling valve 45 therein. The mixing valve 43 has an air inlet valve 46 therein. Said mixing valve communicates with a pipe 47 leading into the combustion chamber 2 through the medium of a pipe 48. The pipe 14 leading from the gas storage tank also communicates with the pipe 47, as hereinbefore described. The flow of combustible mixture into the combustion chamber 2 is controlled by valve means comprising a hollow member 49 (Fig. 3) communicating with one end of the pipe 47, said member extending through the wall of the casing 1 and being secured

at its inner end in an opening 50 in the wall of the combustion chamber 2. The inner end of the member 49 has a valve seat 51 formed thereon, and the member carries a valve 52 adapted normally to be held against the seat 51 by means of a coiled spring 53 to cut off the flow of fluid into the combustion chamber. As has been hereinbefore explained, the force of the gas flowing from the storage tank 11 through the pipes 14 and 47 draws a charge of fuel from the tank 13, and air through the valve 46, into the mixing valve 43, where the fuel and air are intermingled and pass thence into the pipe 48 and are carried into the combustion chamber by the gas coming from the storage tank 11. A screen 54 may be placed in the pipe 47 adjacent the valve 52 to prevent back firing into the supply of fuel.

Means may be provided, if desired, for positively holding the fuel inlet valve 52 closed between the times when charges are to be carried into the combustion chamber, at which times said valve will be opened by fluid pressure. The means herein shown for this purpose comprises a bell-crank lever 55 engaging the stem of the valve 52, said lever being normally held in position to close the valve 52 by means of a cam 56 on the shaft 36 and a link 57 attached to the lever 55 and arranged to be engaged by said cam. The shape of the cam 56 permits the valve 52 to be opened at the proper time.

In some instances it may be desirable to dispense with the fuel tank 13 and connect the system with a gas main. The main may be attached to a pipe 58. In such an event the fuel supply tank 13 and the mixing valve 43 would be cut off by means of a valve 59, and the valve 60 would be opened. The quantity of combustible mixture flowing into the combustion chamber 2 may be controlled by means of a throttle valve 61 and the quality of the mixture may be controlled by the controlling valve 45 and mixing valve 43.

In case the working pressure within the system is higher than the pressure which it is safe to put upon the explosive mixture, a reducing valve 62 may be inserted in the system to lower the pressure at the charge-injecting means. A cycle of operation of the apparatus is as follows: An explosion occurs and the expanding gases pass through the valve 16 into the main reservoir 4 and also through the check valve 25 into the outer portion of the system, exerting pressure on the water and on the fuel-injecting means. The heat in the combustion chamber radiates into the water in the compartment 3 and heats the water therein. The exhaust valve 33 then opens and the exhaust gases pass from the combustion chamber 2 and into the chamber 29, heating the water in the water coils 31. The reduction of pressure within the combustion chamber, caused by the opening of the exhaust valve 33 causes the fuel inlet valve 52 to be opened by the pressure in the pipe 47 (such opening being permitted at the proper time by the cam 56) to admit a fresh charge of explosive mixture. The spark plug is then operated to cause another explosion.

As has been explained, the water in passing through the coil 31 absorbs heat from the exhaust gases flowing through the chamber 29 and while in the compartment 3 the water receives heat from the combustion chamber on one side, and from the chamber 29 on the other. In this way the water in the compartment 3 may be maintained at a high temperature so that upon passing through the valve 19 into the main reservoir 4 it will immediately expand into steam. As is well known, however, a great amount of heat is required to convert water into steam even though the water be at the boiling point, and this additional heat is derived from the hot gases from the combustion chamber which are directed against the water by the deflectors 23.

If desired, suitable lever mechanism 63, 64 and 65 may be provided for operating the water valve 19, throttle valve 6 and the fuel throttle valve 61 in starting and stopping the apparatus. Suitable means may also be provided for injecting a charge of explosive mixture into the explosion chamber 2, for forcing water into the compartment 3, and for rotating the shaft 36 when starting up the apparatus for the first time.

Referring now to Fig. 4: In a railroad locomotive embodying my invention, the casing 100 extends horizontally, the main reservoir 101 being at the forward portion of the engine. The water tank 102 and the gas supply tank (the latter not being shown in this figure) may be positioned at opposite sides of the main reservoir 101, the pipe 103 connecting said tanks extending upwardly over the main reservoir as shown. A reserve supply of water may be carried in the tender of the engine, and the fuel tank may also be located upon the tender of the engine. The fuel mixing valve 104 is preferably positioned in the cab A of the engine, as shown, and is connected with the fuel tank through a pipe 105. Said mixing valve communicates with the combustion chamber through the medium of a pipe 106 and fuel inlet valve 107, which valve is positioned beneath the main reservoir.

108 is a throttle valve in the pipe 106. The main gas valve 109 controlling the discharge from the combustion chamber to the main reservoir 101 may be located upon the upper side of said reservoir. The gas supply tank communicates through the medium of a pipe 110 with the pipe 106 leading from the mixing valve 104 to the combus-

tion chamber. The water tank 102 is arranged to deliver into the water compartment in the casing 1 through pipes 111 and 112. A pipe 111ª leads to the water tank on the tender.

The exhaust valve 113 and the spark plug 114 may be operated by a vertical lever 115 pivoted at 116 upon a suitable stationary support 117. The lever 115 may be oscillated by means of an eccentric 118 on one side of the engine axles B and a link 119 connecting one end of said lever with said eccentric. Yieldable members 120 carried by the lever 115, in this instance at opposite sides of the pivot point 116, are adapted to engage the exhaust valve 113 and the spark plug 114 to operate them. The operating mechanism just described is free from objectionable rigidity, for which reason it is a very desirable construction for railroad locomotives.

121 and 122 represent throttle levers arranged to control valves corresponding to the water valve 19 and the throttle valve 6, respectively, of Fig. 1. By means of said levers the rate of flow of water into the main reservoir 101, and the flow of the expansive fluid from said reservoir into the engine cylinders C, may be controlled.

In order to decrease back pressure in the engine cylinders C I may provide within the smoke box D of the engine a structure 123 (Fig. 6) having passages 124 which communicate at one end with the exhaust outlets from the engine cylinders C and at their other end merge into a discharge passage 125. A passage 126 leading from the combustion chamber also delivers into the discharge passage 125, in the instance centrally of the engine cylinder exhaust passages 124. The exhaust from the combustion chamber thus creates a suction in the engine cylinder exhaust passages 124 so that back pressure in the engine cylinders C is decreased.

From the above description it will be understood that my invention provides an apparatus for generating an elastic fluid under pressure which has all the expansive properties of superheated steam. The apparatus is very much simpler and also more efficient and more easily operated than the ordinary steam generating system.

I claim as my invention:

1. In a power generating apparatus, the combination of a combustion chamber, a water compartment arranged to absorb heat therefrom, a reservoir, said chamber and compartment opening into said reservoir, and deflectors in the reservoir for directing together the fluids flowing from said chamber and compartment into said reservoir.

2. In a power generating apparatus, the combination of a combustion chamber, a water compartment arranged to absorb heat therefrom, a coil of pipe through which water passes to said compartment, said coil being arranged to be heated by the exhaust from said combustion chamber, and a main reservoir, said combustion chamber and said water compartment delivering into said main reservoir.

3. In a power generating apparatus, the combination of a combustion chamber, a reservoir arranged to receive hot gases from said combustion chamber, a pipe delivering water to said reservoir, said pipe being coiled a portion of its length, and a chamber surrounding said coiled portion communicating with said combustion chamber, the exhaust gases passing from said combustion chamber through the second mentioned chamber, and heating the water in said coil.

4. In a power generating apparatus, the combination of a combustion chamber, a water compartment surrounding said combustion chamber, a reservoir, said combustion chamber and said water compartment delivering into said reservoir, a chamber surrounding said water compartment, the exhaust gases passing from said combustion chamber through the last mentioned chamber, and a coil of pipe in the last mentioned chamber adapted to conduct water to said water compartment.

5. In a power generating apparatus, the combination of an explosion chamber, a reservoir arranged to receive hot gases therefrom, means for supplying water to said reservoir, fuel-supplying means, and means for conducting the expanding gases from said explosion chamber into communication with said fuel-supplying means, and thence into said explosion chamber, so that gas in said conducting means will carry a charge of explosive material into said explosion chamber.

6. In a power generating apparatus, the combination of an explosion chamber, a reservoir arranged to receive hot gases therefrom, means for supplying water to said reservoir, a fuel-supplying tank, and means for delivering a pressure fluid to said explosion chamber, said fuel-supplying tank communicating with the last mentioned means so that a charge of explosive fuel will be carried into said combustion chamber by the pressure fluid in said pressure-fluid-supplying means.

7. In a power generating apparatus, the combination of an explosion chamber, a reservoir arranged to receive hot gases therefrom, means for supplying water to said reservoir, a fuel-supplying tank, and means communicating with said explosion chamber and adapted to force a charge of fuel from said fuel supply tank into said explosion chamber by the pressure of gas derived from said explosion chamber.

8. In a power generating apparatus, the combination of a combustion chamber, a

water compartment arranged to absorb heat therefrom, a reservoir communicating with said chamber and said compartment, a chamber adjacent said water compartment and communicating with said combustion chamber, the exhaust gases from said combustion chamber passing through the second mentioned chamber, a coil of pipe in the second mentioned chamber communicating with said water compartment, a water supply tank, means for conducting water from said tank to said coil of pipe, and means for conducting gases from said combustion chamber to said tank for placing pressure upon the water therein.

9. In a power generating apparatus, the combination of a combustion chamber, a reservoir adapted to receive hot gases therefrom, means for supplying water to said reservoir, means for heating the water previous to its entry into said reservoir, a source of fuel supply, and pipes communicating with said combustion chamber and with said water supply so that gas pressure will be placed upon the water supply, said pipes communicating with the source of fuel supply, whereby a charge of fuel will be carried by the gas in said pipes into said combustion chamber.

10. In a power generating apparatus, the combination of a combustion chamber, a water compartment arranged to absorb heat therefrom, a reservoir, said combustion chamber and said water compartment delivering into said reservoir, and a chamber adjacent said water compartment and communicating with said combustion chamber, so that the exhaust gases pass from said combustion chamber through the last mentioned chamber to heat the water in said water compartment.

11. In a power generating apparatus, the combination of a combustion chamber, a water compartment arranged to absorb heat therefrom, a reservoir, said combustion chamber and said water compartment delivering into said reservoir, a valve controlling the flow of hot gases from said combustion chamber into said reservoir, a valve controlling the flow of water from said water compartment into said reservoir, a chamber adjacent said water compartment and communicating with said combustion chamber, a valve controlling the flow of exhaust gases from said combustion chamber into the second mentioned chamber, a source of fuel supply, and a valve controlling the entrance of fuel into said combustion chamber.

12. In a power generating apparatus, the combination of an explosion chamber, a water compartment arranged to absorb heat therefrom, a main reservoir, said explosion chamber and said water compartment delivering into said main reservoir, a water supply tank, a pipe connecting said tank with said water compartment, a pipe connecting said explosion chamber with said water supply tank whereby the exhaust gases from said explosion chamber will place pressure upon the water in said water supply tank, a tank for fluid fuel communicating with said combustion chamber, and a pipe arranged to conduct the expanding gases from said explosion chamber into position to carry a charge of fuel from said fuel tank into said combustion chamber.

13. In a power generating apparatus, the combination of an explosion chamber, a water compartment arranged to absorb heat therefrom, a main reservoir, said explosion chamber and said water compartment delivering into said main reservoir, a water tank, a pipe connecting said tank with said water compartment, a tank for fluid fuel, a gas storage tank, pipes arranged to conduct gas from said explosion chamber into said gas storage tank and into said water tank, and a pipe extending from said gas storage tank to said combustion chamber, said fuel tank communicating with the last mentioned pipe.

14. In a power generating apparatus, the combination of a combustion chamber, a water compartment adjacent said combustion chamber, a main reservoir adapted to receive heated gases from said combustion chamber and water from said water compartment, a water supply tank connected with said water compartment, a gas storage tank connected to receive gases from said combustion chamber, a connection between said water tank and said gas storage tank whereby pressure will be placed upon the water in said water tank, and fuel supplying means in communication with said combustion chamber, said gas storage tank communicating with said fuel-supplying means, whereby a charge of combustible fluid will be carried into said combustion chamber by the gases flowing from said gas storage tank.

15. In a power generating apparatus, the combination of a combustion chamber, a water compartment adjacent said combustion chamber, a chamber adjacent said water compartment and connected with the exhaust from said combustion chamber, a main storage tank arranged to receive hot gases from said combustion chamber and heated water from said water compartment, means for supplying fuel to said combustion chamber, and means for supplying water to said water compartment.

16. The combination with an engine, of an apparatus comprising a combustion chamber, a reservoir arranged to receive hot gases from said chamber, means for supplying water to said reservoir, said reservoir delivering to said engine, a pipe conducting the exhaust from said combustion cham-

ber, and a pipe conducting the exhaust from the steam chest of said engine, and communicating with the first mentioned pipe so that the exhaust from said combustion chamber will decrease back pressure on the engine.

17. The combination with an engine, of an apparatus for generating an elastic pressure fluid, said apparatus delivering said pressure fluid to said engine for driving the latter, said apparatus comprising an explosion chamber, means for conducting away the exhaust from said explosion chamber, and means connecting the steam chest of said engine with said exhaust-conducting means, whereby the exhaust from said explosion chamber will decrease back pressure on the engine.

18. In a power generating apparatus, the combination of a combustion chamber, a water compartment arranged to absorb heat therefrom, a reservoir with an inlet and an outlet, said chamber and compartment opening into said reservoir, and a screen in the reservoir for thoroughly mixing the fluids flowing from said reservoir.

In testimony whereof I affix my signature in presence of two witnesses.

EZRA F. HOPKINS.

Witnesses:

Mrs. James Hayes,

Thomas J. Johnson.