Feb. 4, 1930. H. A. DENMIRE 1,745,985

STRIP CUTTING MACHINE

Filed July 22, 1927 2 Sheets-Sheet 1

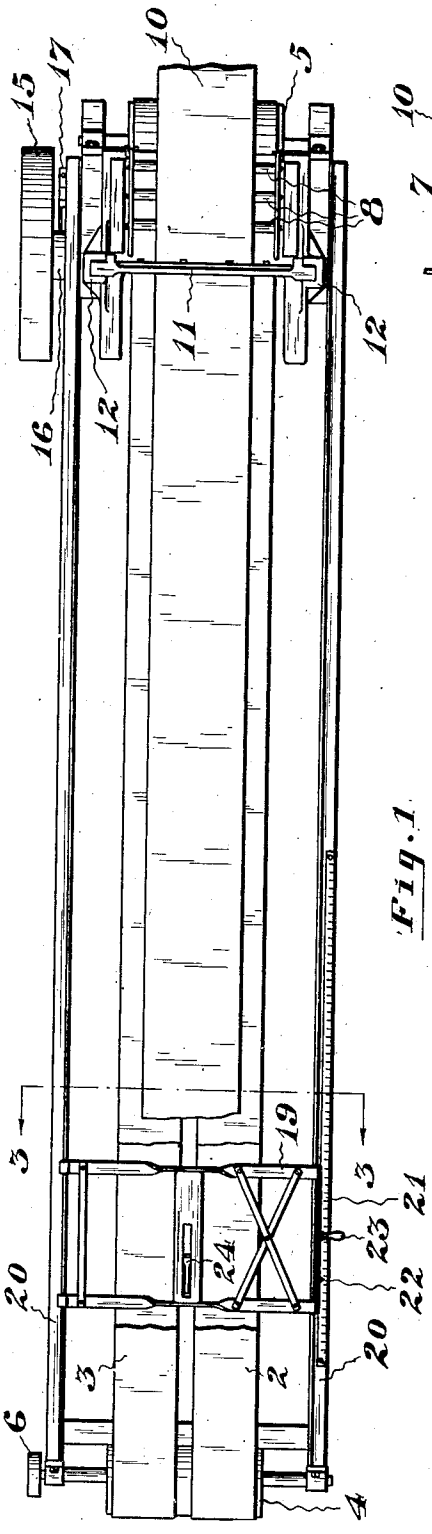

Fig. 1.

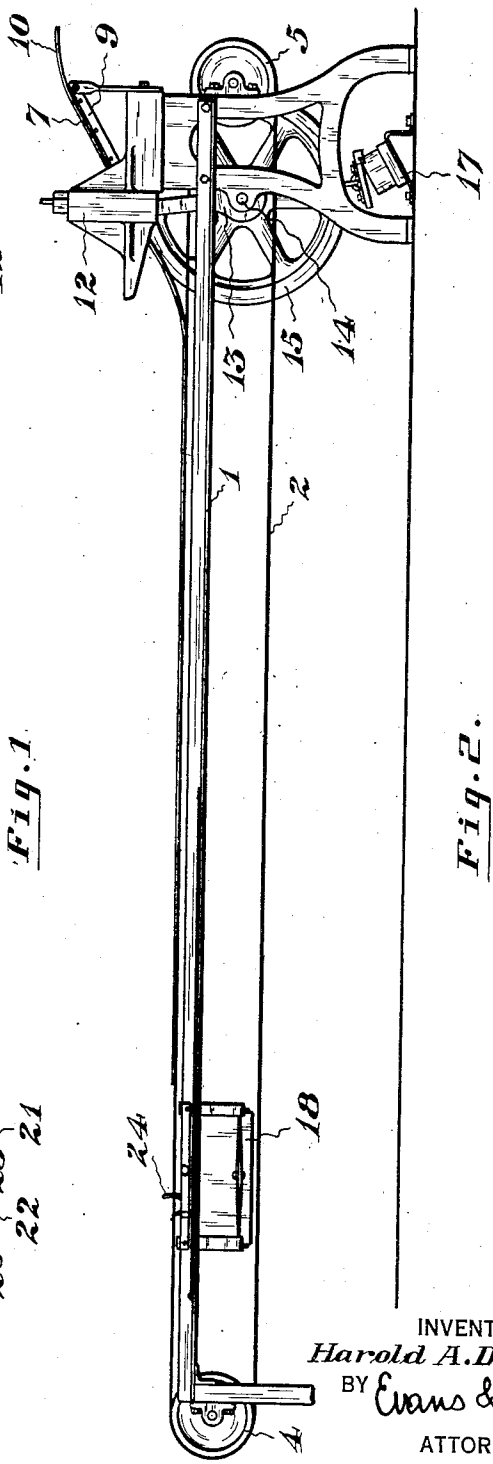

Fig. 2.

INVENTOR
Harold A. Denmire
BY Evans & McCoy
ATTORNEYS

Feb. 4, 1930. H. A. DENMIRE 1,745,985

STRIP CUTTING MACHINE

Filed July 22, 1927 2 Sheets-Sheet 2

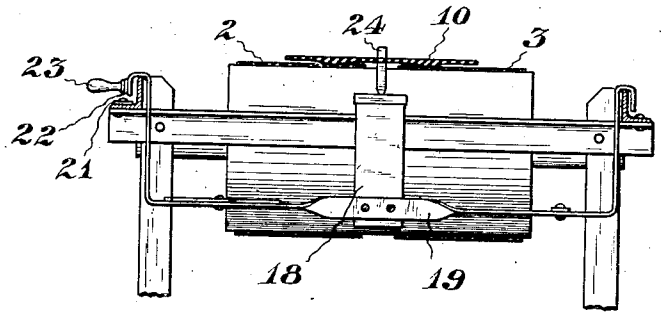

Fig. 3.

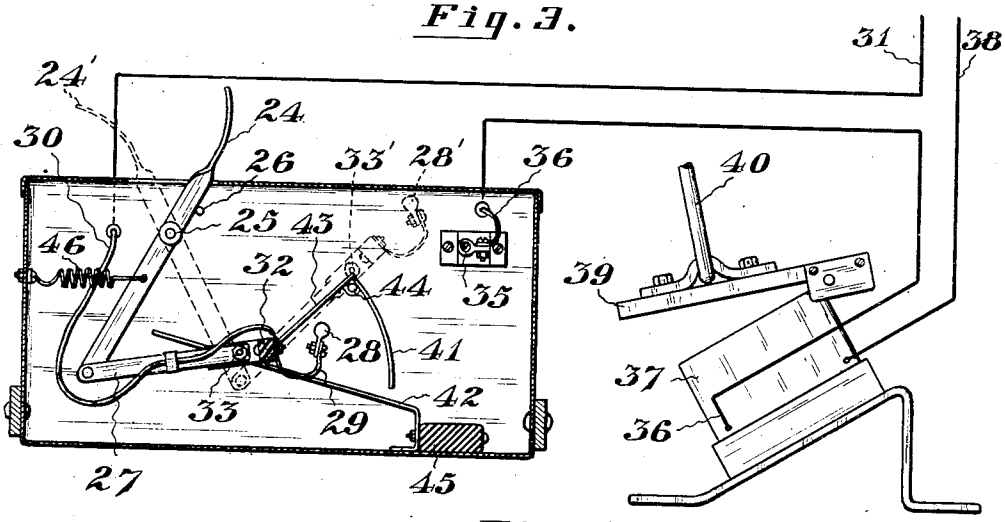

Fig. 4.

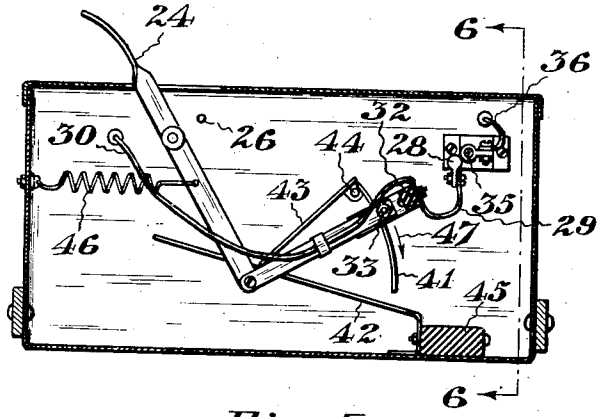

Fig. 5.

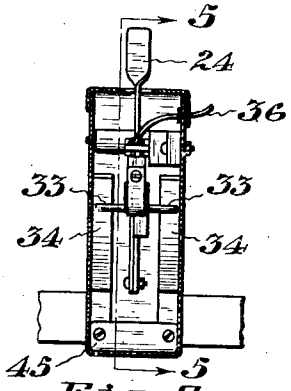

Fig. 6.

INVENTOR
Harold A. Denmire
BY Evans & McCoy
ATTORNEYS

Patented Feb. 4, 1930 1,745,985

UNITED STATES PATENT OFFICE

HAROLD A. DENMIRE, OF AKRON, OHIO, ASSIGNOR TO THE GENERAL TIRE & RUBBER COMPANY, OF AKRON, OHIO, A CORPORATION OF OHIO

STRIP-CUTTING MACHINE

Application filed July 22, 1927. Serial No. 207,647.

This invention relates to an improved machine for severing predetermined lengths of strip material from a continuously moving strip of such material.

One of the objects of the invention is to provide a machine for cutting predetermined lengths of strip material suitable for use in conjunction with a fabricating machine of the character set forth in my copending application Serial No. 148,702 filed November 16, 1926.

A further object of the invention is to provide an improved control mechanism that is readily adjustable over a great range of movement to sever strips of differing lengths from the strip material supplied thereto.

A further object of the invention is to provide an improved form of electrical control switch that positively creates a circuit for a very short interval of time and that is so constructed as to preclude the establishment of a prolonged flow of current through the control circuit in the event the machine becomes locked or the switch arm stuck from any reason whatsoever.

An additional object of the invention is to provide an electrical control switch in which the control arm must pass through a complete cycle of movement each time that the electrical circuit is established.

These and other objects of the invention will be apparent from a consideration of the accompanying specification taken in conjunction with the accompanying drawings, wherein:

Figure 1 is a top plan view of a machine constructed in accordance with the invention showing a portion of the conveyor belt and the strip of material carried thereby cut away to better illustrate the details of construction of the machine.

Fig. 2 is a side elevational view of the machine shown in Fig. 1.

Fig. 3 is a transverse cross-sectional view taken substantially on lines 3—3 of Fig. 1 looking in the direction of the arrows.

Fig. 4 is an enlarged side elevational view of the switch mechanism diagrammatically showing the associated control circuit and control mechanism.

Fig. 5 is a corresponding side elevational view of the control switch taken substantially on line 5—5 of Fig. 6; and

Fig. 6 is a corresponding end elevational view of the switch mechanism shown in Fig. 5.

The machine particularly shown as a preferred embodiment of the invention comprises a conveyor belt that is adapted to continuously carry forward a strip of material that is supplied to the machine from any desired source. A suitable contact mechanism that is controlled by the leading edge of the strip material serves to operate a shear mechanism for severing predetermined lengths of material from the strip material that is fed to the machine. The contact mechanism is shown mounted on the frame of the machine so as to be readily adjustable for cutting different predetermined lengths of strip material by the operation of the machine.

More particularly, the machine comprises a frame 1 that operatively supports a pair of endless conveyor belts 2 and 3 on suitable pulleys 4 and 5 that are respectively journaled in the frame. The spaced conveyor belts 2 and 3 are driven at any desired speed by any suitable driving pulley 6. The pulleys 4 and 5 are rotatably supported in the machine frame in any suitable manner.

The forward end of the machine has mounted thereon an inclined feed table 7 that has a series of idler rolls 8 freely mounted in a pair of side members 9 for reducing the frictional resistance to movement of the strip material 10 through the machine. The shear mechanism has a cutter bar 11 that reciprocates in suitable opposed guides 12 that are arranged at opposite ends of the blade and are carried by the frame. The cutter bar 11 is reciprocated by a connecting rod 13 that is controlled from a suitable eccentric that is mounted on a transverse shaft 14. A continuously driven fly wheel 15 is rotatably carried by the shaft 14 and operatively connected thereto by means of a clutch mechanism 16 that is controlled from a suitable electro-magnet member 17.

The control magnet 17 is connected to a switch mechanism 18 that is suitably sup-

ported from a cross frame 19 that slidably engages the side trackways 20 of the main frame of the machine. One of the trackways of the machine is suitably indexed as at 21 for the more convenient measurement of the length of the strip material through the use of an indexing pointer 22. A suitable handle 23 serves to move the frame 19 together with the switch mechanism 18 longitudinally along the trackways. The body portion of the switch mechanism is preferably carried intermediate the conveyor belts and the control arm 24 of the switch mechanism protrudes from between the two conveyor belts to operatively engage the advancing end of the strip material 10 as it is carried along by the conveyor belts.

The structure of the switch 18 is illustrated in detail in Figs. 4, 5 and 6 and comprises in general a control arm 24 that is pivotally mounted on a suitable transverse shaft 25. A suitable stop 26 defines the forward or engaging position of the control arm. The lower end of the control arm carries an operating link 27 that is pivotally connected thereto and that has a suitable contact member 23 carried at its free end by means of a resilient connecting member 29 that also serves as a conducting member for electrically connecting the contact member 28 with a suitable control cable 30 that leads, as diagrammatically shown, to one terminal of any suitable source of supply of electrical energy, such as the line 31. The contact member 28 is preferably insulated from the end of the operating link 27 by a suitable block of insulating material 32. A pair of opposed guide arms 33 that extend outwardly on each side of the free end portion of the link 27 are adapted to travel on a pair of suitable opposed trackways 34 that determine the path of movement of the contact member 28 when the operating arm 24 is actuated.

A stationary contact member 35 is suitably connected to a conductor 36 that leads to one side of an electro-magnet clutch control member 37. The other side of the electro-magnet control member 37 is electrically connected to one terminal of any suitable source of electric energy through a conductor 38. A suitable armature 39 that is hinged at one end to the frame of the electro-magnet 37 serves to control the clutch mechanism 16 through a connecting link 40 that is suitably connected to each member.

Each of the opposed trackways 34 has a rigidly mounted guide portion 41 that terminates at one end well short of a second rigid trackway portion 42, leaving an opening therebetween that permits the outwardly extending guide arms 33 to pass between the end of the trackways 41 and the trackway 42 upon return movement of the link 27. Each trackway 34 also has a yielding or hinged section 43 that is pivotally connected at its upper end to the stationary trackway 41 by a transverse pintle 44 in order that the weight of the track sections 43 will yieldingly hold the free end of the track sections in contact with the operating surface of the stationary track 42. The stationary trackway 42 is rigidly supported preferably in an inclined position. A resilient cushioning block 45 preferably made of rubber or other resilient material serves to cushion the outer end of the arm 27 and the contact member 28 as they descend by force of gravity to their lowest position. A return spring 46 of any suitable character serves to hold the control arm 24 in its engaging position after each operation.

The outer cam portion of the track 41 is preferably arranged concentric with the pivot center of the arm 27 at the time of release of the fingers 33 from the upper end of the pivoted portion 43 of the track. This assists in guiding the contact member 28 to positive engagement with the stationary contact member 35.

The general operation of the machine is substantially as follows. The strip material 10 is fed to the machine over the freely operating idler rolls 8 that are arranged on an incline relative to the direction of movement of the shear knife 11 in order that the leading end of the strip material 10 will be beveled or skived by the cutting operation. After the strip material 10 is severed by the operation of the shear, the leading end moves between the cutting blade and the bed of the machine to engagement with the spaced conveyor belts 2 and 3 that carry it forwardly at a predetermined rate of travel. After a suitable portion of the strip material has passed beneath the knife head, the leading end thereof engages the operating arm 24 of the switch mechanism that extends upwardly between the conveyer belts 2 and 3. The continued movement of the strip material 10 carries with it the control arm 24 from its position shown in solid outline in Fig. 4 to the position 24′ that is shown in dotted outline in this figure. In bringing the arm 24 to the position shown in dotted outline, the opposed arms 33 that are carried by the forward end of the link 27 travel upwardly on the inclined trackway 43 to the position 33′ shown in dotted outline in Fig. 4. The continued forward movement of the control arm 24 beyond this position causes the guide arms 33 to move beyond the upper end of the track portion 43 and to drop over the arcuate portion of the track 41 as indicated by the arrow 47 of Fig. 5 which illustrates the contact carrying arm in an intermediate moving position. During the falling movement of the outer end of the arm 27, the moving contact member 28 engages the stationary contact 35 and momentarily establishes a circuit from the source of supply 31 and 38 through the contact members 28 and 35 to the electro-mag-

net winding 37. The magnetization of the winding 37 pulls the armature 39 to the face of the magnet and thereby operates the link 40 to connect the moving fly wheel 15 with the operating shaft 14 that carries the eccentric which in turn operates the cutter blade 11 to sever the strip material 10. The cutter blade then returns to its uppermost position. The momentary contact of the switch members is made only during the falling movement of the outer end of the arm 27 which insures that the circuit will not remain closed for a prolonged period of time regardless of whether or not the strip material holds the control arm 24 in any intermediate position and also independent of whether or not the length of material severed from the strip 10 is removed immediately from the conveyor belt. It will also be seen that immediately upon the removal of the severed strip of material 10 from the conveyor belt, the engaging portion of the control arm 24 will be released and the spring 46 will return the control arm to its operative position shown in solid lines in Fig. 4 of the drawings.

As the link 27 is returned to its initial position the arms 33 pass between the pivoted portions 43 of the inclined track and the face of the trackway 42. Immediately after the arms 33 pass the free end of the pivoted track portions 43, these portions drop back into place and preclude the movement of the arms 33 in any direction except up the inclined face 43. Furthermore, if for any reason whatsoever the pivoted track portions 43 do not drop back into engagement with the track 42, the switch cannot again operate because the contact carrying arm will not be brought to such position as to enable the contact 28 to engage with stationary contact 35.

If it is desired at any time to change the length of strip material that is being cut from the endless strip 10 by the machine, the entire switch carrying cross frame 19 is shifted longitudinally along the supporting tracks 20 to engage the strip at such position as may be desired. The indicator 22 that is carried by the cross frame is so related to the graduations 21 that are formed on the main frame as to read directly in the length of the portion of the strip 10 that is being severed from the main strip. This provides an easily adjusted control mechanism that may conveniently be moved over a very wide range of adjustment to obtain any desired length of severed strip.

The particular service to which this invention is preferably applied is in the severing of predetermined lengths of fabricated tread stock from a continuously moving strip of such stock that may be made up through the operation of the machine shown in my aforementioned application for Letters Patent.

As heretofore explained, in a switch mechanism for controlling the cutting of stock of this character it is primarily necessary to provide a mechanism that is simple in construction and that is substantially fool-proof. It is also of considerable importance to provide a switch mechanism that shall operate to only momentarily establish a circuit at a predetermined point in the movement of the contact member in order that the cutting blade will be operated only once and will again be immediately returned to its uppermost position. If the clutch remains in engagement it also necessitates complicated apparatus for the successful handling of the shear mechanism in order that the blade of the shear will neither remain in its down position nor be successively actuated to make unintentional cuts in the strip of material being fed to the machine. It is believed that the simplified design of the switch mechanism is of considerable importance since the free dropping of the outer end of the arm 27 with its contact past the stationary contact 35 provides a very positive movement for the control mechanism.

Although I have illustrated a pivoted track section 43, it will be understood that any track section that permits the fingers 33 to be retrieved to their initial position, whereupon the trackway will take its defined initial position with respect to the inclined trackway, will be equally serviceable.

It should be understood that the embodiment of the invention herein described is for purposes of illustration and explanation of the principles of the invention, and that only such limitations should be placed thereon as are imposed by the prior art.

What I claim is:

1. A stock feeding and cutting machine comprising a stock conveyor, a cutter normally supported clear of the stock, actuating means for moving the cutter into and out of engagement with the stock, electrically operated means for controlling said cutter actuating means, a control circuit for said electrically operated means, a switch unit mounted adjacent the conveyor and provided with a movable control arm normally projecting into the path of travel of the stock and adapted to be shifted away from normal position by the moving stock, means controlled by said arm in its movement away from normal position for momentarily closing and then opening the control circuit to cause a single impulse of current to pass therethrough to cause an actuation of the cutter, and means for returning the control arm to normal position when the same is disengaged from the stock and for maintaining said circuit open during the return of said arm.

2. A stock feeding and cutting machine comprising a stock conveyor, a cutter normally supported clear of the stock, actuating means for moving the cutter into and out of

engagement with the stock, electrically operated means for controlling said cutter actuating means, a control circuit for said electrically operated means, a switch unit mounted adjacent the conveyor and provided with a movable control arm normally projecting into the path of travel of the stock and adapted to be shifted away from normal position by the moving stock, said switch unit being adjustable longitudinally of the conveyor, means controlled by said arm in its movement away from normal position for momentarily closing and then opening the control circuit to cause a single impulse of current to pass therethrough to cause an actuation of the cutter, and means for returning the control arm to normal position when the same is disengaged from the stock and for maintaining said circuit open during the return of said arm.

In testimony whereof I affix my signature.

HAROLD A. DENMIRE.