F. H. HALSTEAD.

FEED MECHANISM.

APPLICATION FILED APR. 8, 1918.

1,299,717.

Patented Apr. 8, 1919.

2 SHEETS—SHEET 1.

Fig. 1.

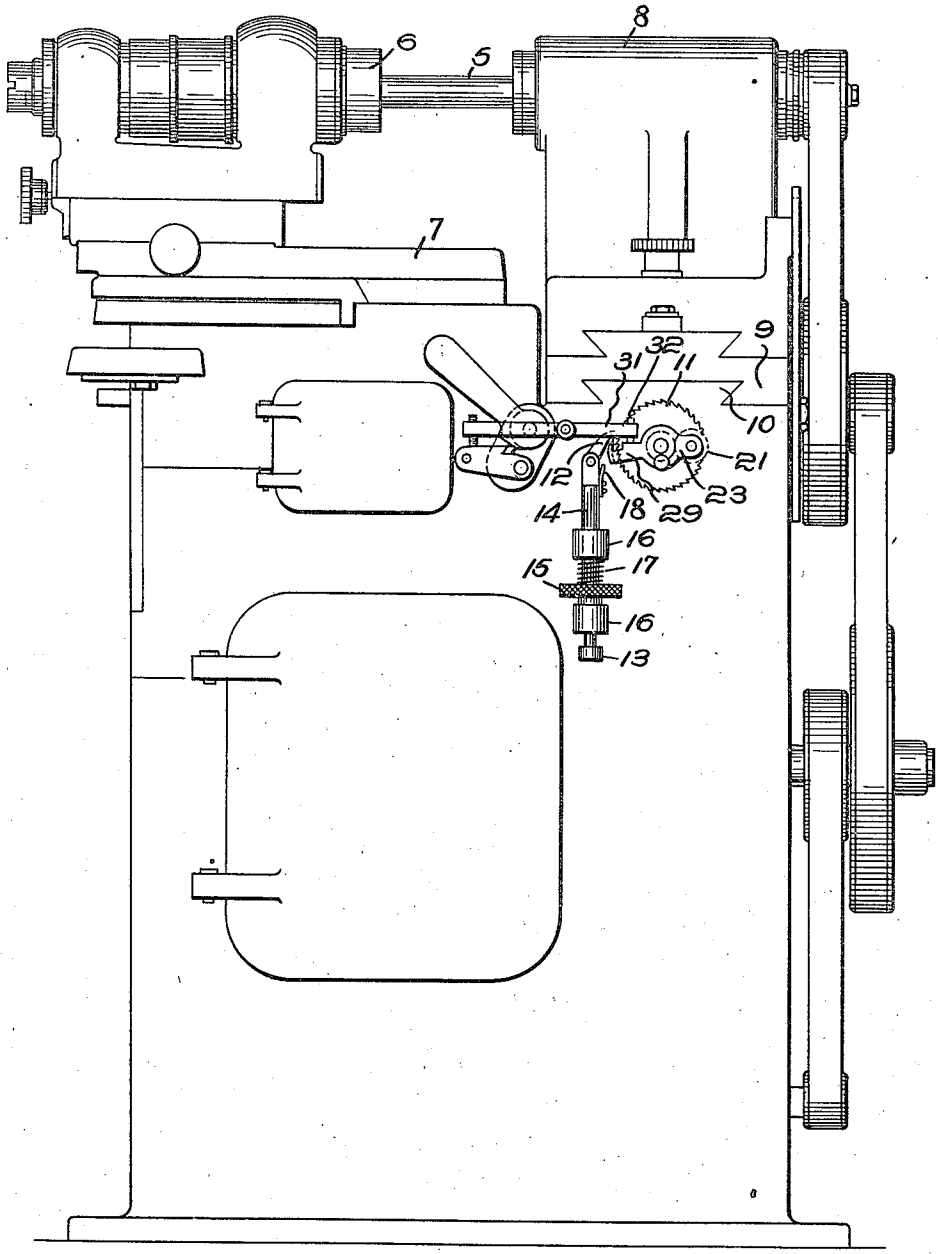

Inventor:
Frederick H. Halstead.
by Emery Booth Janney & Varney
Attys.

F. H. HALSTEAD.

FEED MECHANISM.

APPLICATION FILED APR. 8, 1918.

1,299,717.

Patented Apr. 8, 1919.

2 SHEETS—SHEET 2.

Fig. 3.

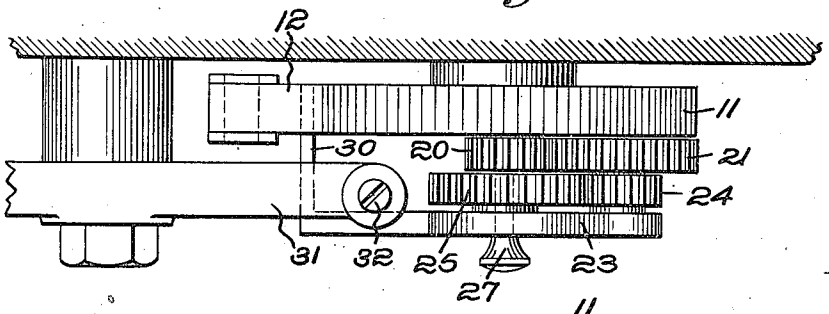

Fig. 4.

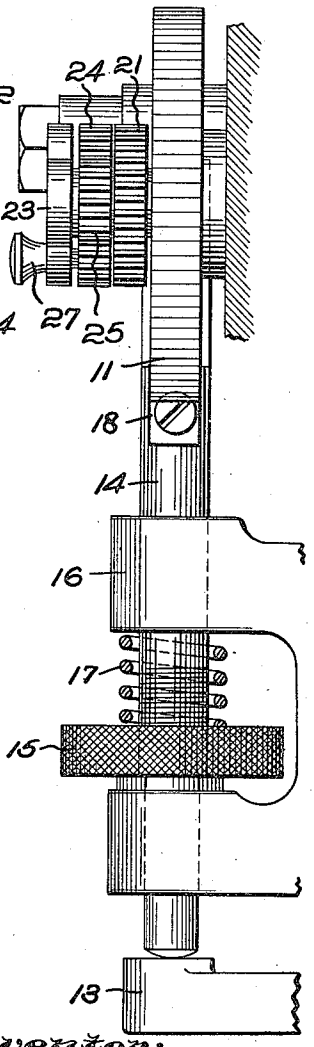

Fig. 2.

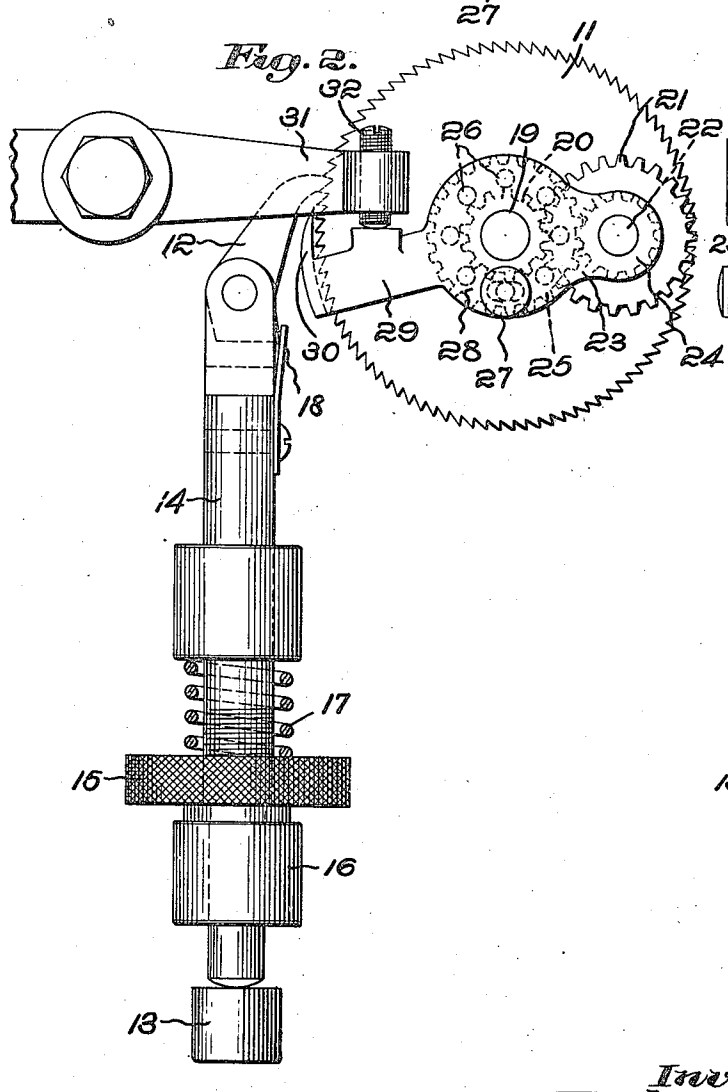

Inventor:
Frederick H. Halstead.
by Emery Booth Janney & Varney
Attys.

UNITED STATES PATENT OFFICE.

FREDERICK H. HALSTEAD, OF BOSTON, MASSACHUSETTS, ASSIGNOR TO RIVETT LATHE AND GRINDER COMPANY, OF FANEUIL, MASSACHUSETTS, A CORPORATION OF MASSACHUSETTS.

FEED MECHANISM.

1,299,717. Specification of Letters Patent. Patented Apr. 8, 1919.

Application filed April 8, 1918. Serial No. 227,409.

To all whom it may concern:

Be it known that I, FREDERICK H. HALSTEAD, a citizen of the United States, and a resident of Boston, county of Suffolk, and State of Massachusetts, have invented an Improvement in Feed Mechanisms, of which the following description, in connection with the accompanying drawings, is a specification, like characters on the drawings representing like parts.

This invention pertains to improvements in feed mechanisms, and more particularly, though not exclusively, to automatic feed-reducing mechanisms for use in connection with machine tools.

I have elected to show and describe one embodiment of a preferred form of my invention in connection with a grinder which may resemble somewhat the oscillating grinder for grinding ball races shown in my co-pending application, Serial No. 221,954, filed March 12, 1918.

In the drawings:

Figure 1 is a side elevation of a grinder provided with a preferred form of my improvement in feed-reducing mechanisms;

Fig. 2 is an enlarged elevation, partly in section, showing a detail of the feed mechanism;

Fig. 3 is a plan view of that portion of the feed mechanism shown in Fig. 2; and

Fig. 4 is an end elevation of that portion of the feed mechanism shown in Fig. 2.

In Fig. 1 I have shown my improved feed mechanism in connection with an oscillating grinder in which 5 is the tool spindle and 6 is the work chuck carried by the work spindle. The work is shown as carried by an oscillatory support 7, while the tool spindle 5 is carried by a tool-head 8 which is adapted to be fed toward the work by movement along a feed slide 9, all in substantial accordance with my co-pending application.

The before-described mechanism constitutes one form of machine tool in which the work and tool are relatively traversed while one is fed relative to the other by intermittent feed mechanism.

In the preferred form of my invention selected for illustrative purposes, the movable slide 9 is fed relative to the stationary slide 10 by a feed screw adapted to be intermittently rotated by a ratchet 11, preferably through intermediate reversing gearing, as shown in my co-pending application before referred to.

The ratchet 11 may receive its movement from a pawl 12, which is preferably moved to and fro through a predetermined path of movement by any suitable mechanism, herein shown as the lever 13 corresponding to the similar lever in my co-pending application, and acting through a reciprocatory pawl-carrying rod 14 which may be, and preferably is, provided with a feed-limiting nut 15 adapted to abut against a stationary support 16 and to limit the downward movement of the pawl-carrying rod 14. In the preferred form of my invention, the rod 14 is positively moved in an upward direction by the lever 13 and resiliently moved in a downward direction by the opposed resilient means or spring 17. The pawl 12 is preferably resiliently urged toward the ratchet 11 by a spring 18 carried by the reciprocatory pawl-carrying rod 14.

I will now describe the preferred form of means for gradually reducing the amount of rotary feeding movement imparted to the ratchet 11 by the pawl 12. The ratchet 11 is preferably rotatably mounted on a stud 19, about which the ratchet 11 and a pinion 20 are adapted to rotate, said ratchet and pinion being secured one to the other. The pinion 20 meshes with the gear 21 rotatably mounted on a bearing 22 in an arm 23 carried by the stud 19. A relatively small pinion 24 is rotatable with the gear 21 and meshes with teeth in the gear or segment of a gear 25 rotatably carried on the stud 19. The gear 25 is preferably provided with a plurality of tapped holes 26 adapted to receive a clamping screw 27 passing through a slot in the plate 28, from which projects an arm 29 carrying a relatively thin plate 30 adapted to be interposed between the pawl 12 and the adjacent teeth of the ratchet 11 to render ineffective a portion of the working stroke of said pawl.

The before-described gearing and associated parts constitute a preferred form of means for actuating movement of a feed limiting plate adjacent the periphery of the ratchet wheel at a rate much slower than the movement of the periphery of the ratchet wheel, so that a much more gradual reduc-

tion of feed is effected than in feed limiting devices carried by the periphery of the ratchet wheel and driven directly therefrom.

I may, if desired, utilize the movement of the arm 29 to operate traverse stopping mechanism for stopping the relative traverse of work and tool at any desired point. This may be effected through mechanism resembling somewhat that shown in my co-pending application, Serial No. 175,142, filed June 16, 1917, and connected to a lever 31, which is preferably provided with an adjusting screw 32, and which functions in a manner similar to the corresponding lever and adjusting screw of said co-pending application.

The operation of the preferred form of my invention is as follows:—Assuming that the feed mechanism has been adjusted so that the grinding wheel is closely adjacent the surface of the work, the clamping screw 27 is entered through the slot in the plate 28 into that tapped hole 26 which will provide approximately the desired amount of feed prior to stopping of the feeding operation. The clamping screw 27 is then tightened and the machine started in operation. The reciprocation of the pawl-carrying rod 14 will cause the pawl 12 to turn the ratchet 11 and the pinion 20. The pinion 20 will turn the gear 21 and pinion 22 at a relatively lower rate, and the pinion 22 will cause the intermeshing gear or sector which is attached to the arm 29 to rotate at a still lower rate of speed. This will cause the arm 29 to move toward the pawl 12. When the guard or plate 30 has progressed sufficiently to engage the pawl 12, the reduction in feeding movement will begin. The rotation of the ratchet 11 will, however, continue to move the arm 29 so that the guard or plate 30 progressively reduces that portion of the stroke of the pawl 12 which is operative to move the ratchet 11, thereby progressively reducing the feed until the feed is entirely discontinued, or until the arm 29 by engaging the screw 32 has rocked the lever 31, thereby stopping the relative traverse of work and tool, which stoppage preferably also stops reciprocation of the pawl-carrying arm 14, the lever 13 preferably being actuated from means which ceases to operate when relative traverse of work and tool is stopped. This mechanism may be similar to that shown in my co-pending application above referred to.

While the pawl-carrying element 14 preferably reciprocates through a fixed distance, this distance may be varied by adjusting the feed-limiting nut 15 on the pawl-carrying element 14, thus limiting the spring-actuated stroke of the pawl-carrying element 14 and correspondingly reducing the amount of movement imparted by the lever 13.

While I have shown and described a preferred form of one embodiment of my invention, it will be understood that major changes involving omission, substitution, alteration and reversal of parts, and even changes in the mode of operation, may be made without departing from the scope of my invention, which is best defined in the following claims.

Claims:

1. In a machine tool, feed mechanism comprising, in combination, a ratchet and pawl, a movably supported guard and speed-reducing gearing operatively interposed between said ratchet and said guard for moving said guard into interfering relation between said ratchet and said pawl.

2. In a machine tool, feed mechanism comprising, in combination, a ratchet and pawl, a movably supported guard, gearing operatively interposed between said ratchet and said guard for moving said guard into interfering relation between said ratchet and said pawl, and means for securing said guard in a plurality of positions relative to a coöperating adjacent portion of said gearing.

3. In a machine tool, feed mechanism comprising, in combination, a pawl, a ratchet, a stud on which said ratchet is rotatably mounted, a lever rotatably mounted on said stud, a guard carried by said lever, means for swinging said lever about said stud to advance said guard into interfering relationship between said ratchet and said pawl, and means controlled by swinging movement of said lever for effecting stoppage of a coöperating portion of the machine tool.

In testimony whereof, I have signed my name to this specification.

FREDERICK H. HALSTEAD.