May 15, 1962 A. U. PRIESTER, JR., ET AL 3,034,194

METHOD FOR PRODUCING A TUFTED FABRIC HAVING A DEEP FLEECELIKE SURFACE AND THE RESULTING PRODUCT

Filed Nov. 4, 1957

2 Sheets-Sheet 1

Fig. 1.

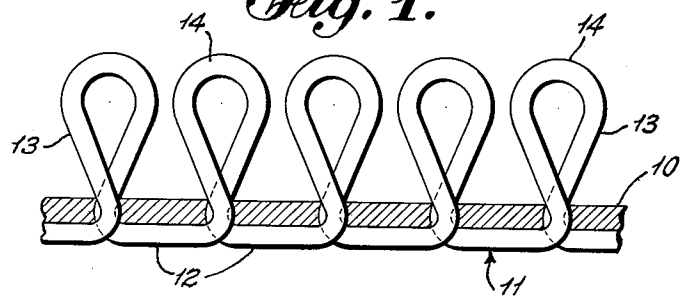

Fig. 2.

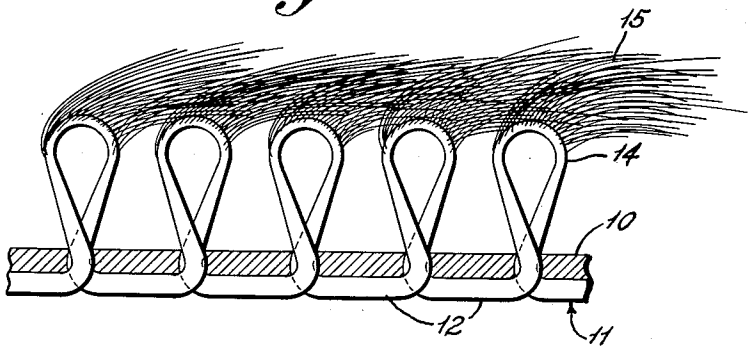

Fig. 3.

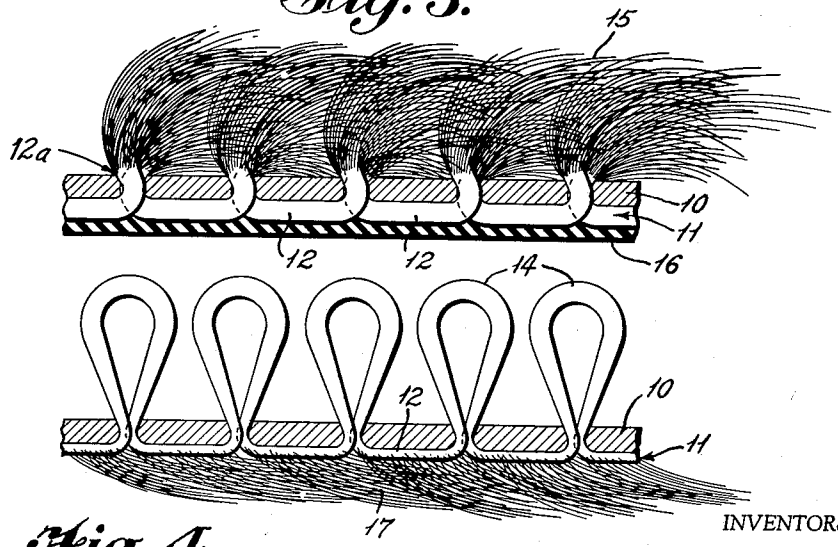

Fig. 4.

INVENTORS

Amos U. Priester, Jr.

and William B. McWhorter

BY

Burns, Doane, Benedict & Irons

ATTORNEYS

May 15, 1962 A. U. PRIESTER, JR., ET AL 3,034,194

METHOD FOR PRODUCING A TUFTED FABRIC HAVING A DEEP FLEECELIKE SURFACE AND THE RESULTING PRODUCT

Filed Nov. 4, 1957 2 Sheets-Sheet 2

Fig. 5.

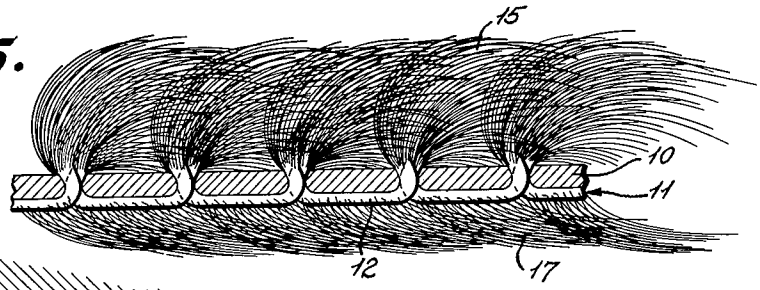

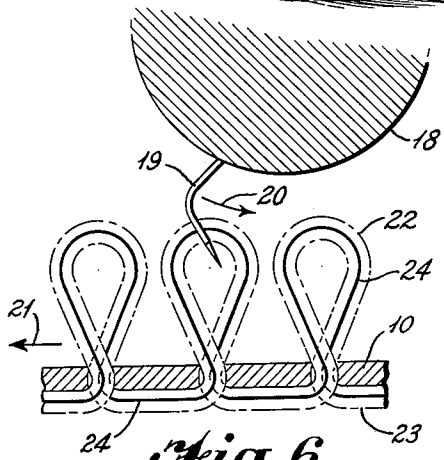

Fig. 6.

Fig. 7.

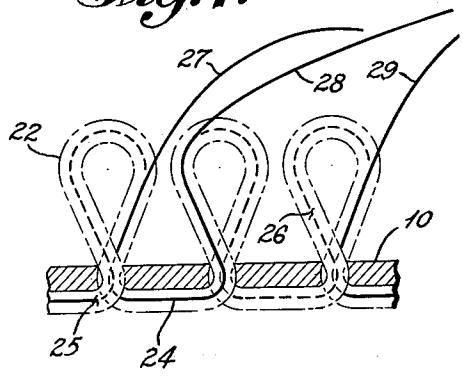

Fig. 8.

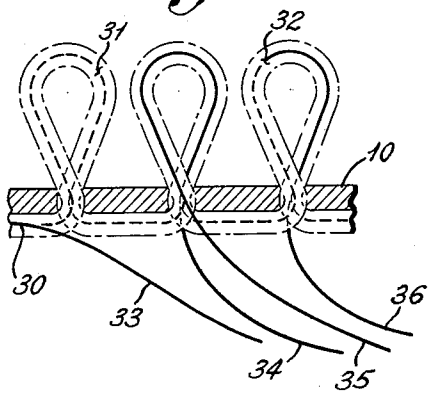

Fig. 9.

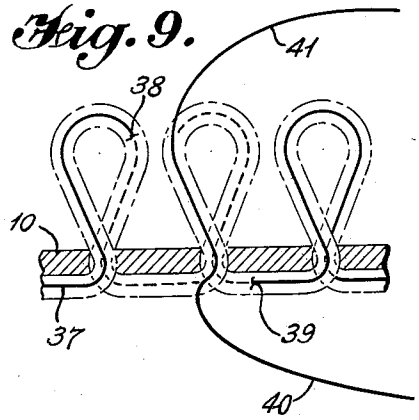

INVENTORS
Amos U. Priester, Jr,
and William B. McWhorter

BY
Burns, Doane, Benedict & Irons
ATTORNEYS

United States Patent Office 3,034,194 Patented May 15, 1962

3,034,194

METHOD FOR PRODUCING A TUFTED FABRIC HAVING A DEEP FLEECELIKE SURFACE AND THE RESULTING PRODUCT

Amos U. Priester, Jr., and William B. McWhorter, La Grange, Ga., assignors to Callaway Mills Company, La Grange, Ga., a corporation of Georgia

Filed Nov. 4, 1957, Ser. No. 694,316
13 Claims. (Cl. 28—78)

The present invention relates to a method for producing a fabric having a deep, soft, fleecelike surface on one or both faces thereof and to the products resulting from such method. More particularly, the invention relates to a method for treating particular types of tufted fabrics to produce fabrics having a deep, soft, fleecelike surface or surfaces which bear a resemblance to animal furs, both in appearance and in heat-insulating properties.

It has heretofore been known to produce fabrics having a deep, soft, fleecelike surface by a knitting process. This knitting process requires expensive and complex equipment which has a very low production rate, with the result that the fabrics so produced are quite expensive. The present invention contemplates the production of such fabrics on readily available and inexpensive equipment having a high rate of production, thereby enabling the fabrics to be produced at low cost.

The method of the invention can be briefly described as including the steps of tufting loop pile in a backing fabric to produce pile loops on one face of the backing fabric and then pulling individual fibers or components from the yarns or strands forming the pile loops. The yarns or strands used to form the pile loops may be spun yarns in which the fibers have staple lengths several times the height of the pile loops or may be tow of continuous filaments. In either event, the individual fibers or filaments of the yarns or strands must be free to move relative to each other and relative to the backing fabric to permit the pulling action to be carried out. If the pulling action is carried out on the loop pile face of the fabric, the pile loops will disappear and be replaced bp a fleecelike surface of individual twist-free fibers of random lengths several times the original height of the pile loops. When the pulling action is carried out on the opposite face of the tufted fabric, the portions of the pile yarns or strands between the loops are not destroyed but are concealed by a fleecelike surface of individual fibers. The pulling action may be carried out on both surfaces of the tufted fabric, thereby producing a fabric having a fleecelike surface on both faces.

A primary object of the invention is to provide a method for rapidly and economically producing a fabric having a deep, soft, fleecelike surface on one or both faces thereof. Another object of the invention is to provide a fabric having a deep, soft, fleecelike surface on one or both faces thereof which can be sold at low cost. Still another object of the invention is to produce a fabric having a deep, soft, fleecelike surface on one face thereof and a loop pile surface on the other face thereof.

Other objects and advantages of the invention are pointed out in the following detailed description which has reference to the accompanying drawings, wherein:

FIGURE 1 is a digrammatic, enlarged, longitudinal sectional view of a tufted fabric suitable for use in the practice of the invention;

FIGURE 2 is a diagrammatic longitudinal sectional view of the fabric shown in FIGURE 1 and showing an intermediate stage in the pulling of fibers or components from the pile loop surface of the fabric;

FIGURE 3 is a view similar to FIGURE 2 but illustrating the fabric after the completion of the pulling of fibers or components from the pile loop surface of the fabric and after the subsequent addition of a coating of binder material to the opposite face of the fabric;

FIGURE 4 is a longitudinal sectional view of the fabric illustrated in FIGURE 1 after fibers or components of the pile yarns or strands have been pulled from the face of the fabric opposite the pile loop face thereof;

FIGURE 5 is a longitudinal sectional view of the fabric shown in FIGURE 1 after fibers or components have been pulled from the pile yarns or strands on both faces of the tufted fabric;

FIGURES 6, 7, 8 and 9 are enlarged, diagrammatic, longitudinal sectional views illustrating the manner in which typical fibers or components can be pulled from a tufted fabric.

Referring first to FIGURE 1, the tufted fabric includes a backing fabric **10** which may be a woven or non-woven fabric. We prefer to use for the backing fabric **10** a tightly woven fabric such as sateen. The construction of the yarns or strands **11** used in the tufting operation is important to the success of the invention and will be described in greater detail hereinafter. Although only one tufting yarn or strand **11** is illustrated in the drawings, it will be understood that a large number of such yarns or strands are used to tuft a plurality of parallel rows of pile loops longitudinally of the backing fabric **10**. Any conventional multiple-needle tufting machine con be used for this purpose. As seen in FIGURE 1, the tufting operation places longitudinally spaced portions **12** of the yarns or strands on one face (which may be termed the opposite face) of the backing fabric **10**. Intermediate portions **13** of the tufting yarns or strands form pile loops **14** on the other face of the backing fabric **10**.

The yarns or strands **11** may be spun yarns or may be tow of continuous filaments collected in loose rope-like form with or without definite twist. The use of yarns spun from staple fibers of synthetic material is preferred. Plied yarns or multiple ends of single yarns may be used. It is essential that the staple fibers of the spun yarns have a staple length of at least three and preferably at least seven or eight times the height of the pile loops **14**. In other words, it is essential that the staple fibers be of sufficient length to extend from one loop through at least one portion **12** into at least one and preferably into two or more adjacent loops. It is also essential to the success of the invention that the staple fibers of the spun yarns be capable of individual movement relative to each other and relative to the backing fabric **10** when the individual fibers are pulled. This latter result is achieved by using the minimum twist in the spun yarns consistent with proper handling of the yarns in the tufting operation. A twist multiplier of not more than about five and preferably less is preferred. In the event tow is used as the tufting strands **11**, it is important that the tow be of high denier and be composed of a large number of filaments. It is important that the denier of the tow be at least about 1,300. Good results have been obtained by the use of tow of 4,000 to 5,000 denier and composed of 200 or more filaments. The individual filaments of the tow are movable relative to each other and relative to the backing fabric **10**.

FIGURE 2 illustrates the tufted fabric of FIGURE 1 during an intermediate stage in the practice of the method of the invention. In that figure the tufting strands **11** may be considered to be spun yarns. A substantial number of fibers of the spun yarns are shown as having been pulled to random lengths from the pile loops **14**. These pulled fibers are indicated by the reference numeral **15**. It will be seen that at least some of the pulled fibers **15** extend from the pile loops **14** a distance greater than the height of those pile loops. This length of the pulled fibers **15** derives from the fact that the pulled fibers have

been pulled longitudinally of the yarns, not only from the pile loops from which they extend, but also through a portion 12 from at least one adjacent loop. In other words when a particular fiber is pulled from any one loop, a portion of the length of the pulled fiber is robbed from at least one adjacent pile loop.

The pulling of the fibers 15 from the pile loops 14 can be rapidly and economically accomplished by the use of one or more nappers. Nappers are well-known for pricking the threads, commonly the filling, of woven fabrics to raise a nap. Conventional planetary nappers, either single-action or double-action, may be used in the practice of the invention. A napper of the type known as a box napper can also be used. A box napper consists of a large cylinder having on its surface longitudinally extending and peripherally spaced strips of bent-knee napper wire or clothing. The fabric to be napped engages the surface of the large cylinder of the box napper with the fabric moving in the same direction that the cylinder is rotating. The cylinder has a surface speed of several times the rate of travel of the fabric. Box nappers have heretofore been used primarily to put a wave or ripple in the nap on a fabric which had previously been napped on a planetary napper. Either type of planetary napper or the box napper can be used alone. Alternatively, it is possible to use first one type of napper and then another. In any event, in practicing the present invention the tufted fabric is usually passed through the napper or nappers a plurality of times. For example, the tufted fabric can be run from one to four times through a planetary napper and then run from one to four times through a box napper. In other instances a single run of the fabric through either type of napper will be found sufficient to produce the desired effect.

FIGURE 3 illustrates the tufted fabric of FIGURE 1 after the fiber pulling action on the loop pile face of the backing fabric has been completed. It will be seen that the loops 14 have entirely disappeared and have been replaced by the fibers 15 of random lengths which form a deep, soft, fleecelike surface. The opposite face of the backing fabric and the portions 12 of the pile yarns are shown in FIGURE 3 as having been covered with a coating 16 of a binder material such as latex. The use of the binder material is optional, but when used it serves to bond the portions 12 of the pile yarns to the backing fabric 10. It is essential, however, that the pulling of the fibers as described above be accomplished before the coating 16 is applied. If the coating 16 were applied before the pulling of the fibers, the fibers would not be free to move individually relative to each other and relative to the backing fabric and the desired pulling action could not be accomplished.

The pulling action described above removes any twisting of the fibers 15 about themselves and those fibers extend to random lengths from the face of the backing fabric in a manner to resemble the hairs of animal fur. The average length of the fibers 15 of the fabric of FIGURE 3 is substantially greater than and often as much as three to ten or more times the original height of the pipe loops 14. As shown in FIGURE 3, the fabric includes a plurality of discrete lengths 12 of spun yarns which lie against one face of the backing fabric 10. The ends 12*a* of the discrete lengths 12, i.e. the transtion zones between the body of lengths 12 and free fibers 15, extend through the backing fabric to the other face thereof. However, these discrete lengths 12 of spun yarns are composed of fibers at least about six times and preferably at least about ten times the discrete lengths 12, with the free ends 15 of those fibers extending individually in twist-free, i.e. no longer twisted in strand form, condition to random lengths from each end of the discrete lengths 12.

FIGURE 4 illustrates the tufted fabric of FIGURE 1 after fibers have been pulled from the longitudinally spaced portions 12 of the pile yarns on the opposite face of the backing fabric. This pulling action can be performed by subjecting the opposite face of the fabric to the action of nappers as described above. Since the individual fibers are free to move relative to each other and relative to the backing fabric 10, the fibers can be pulled longitudinally of the yarns through the longitudinally spaced portions 12 and through the loops 14 to form the twist-free fibers 17 which extend at random lengths from the opposite face of the backing fabric 10. This procedure results in a fabric having a pile loop surface on a first face thereof and a deep, soft, fleecelike surface on the opposite face thereof. The portions 12 of the yarns 11 are not completely destroyed but are concealed by the fibers 17 which have an average length greater than the height of the loops 14.

It is possible to pull fibers from both faces of the tufted fabric of FIGURE 1. Such a fabric is illustrated in FIGURE 5. It is preferable to first pull fibers from the portions 12 of the pile yarns on the opposite face of the backing fabric 10 to provide the random length fibers 17 and to then pull fibers from the pile loops 14 on the other face of the backing fabric to provide the random length fibers 15. This procedure results in a fabric having a deep, soft, fleecelike surface on both faces.

FIGURE 6 diagramamtically illustrates one counter pile roller 18 of a double-action napper and its relationship to the tufted fabric. The roller 18 is provided with napper wire or clothing consisting of a large number of bent-knee napper wires 19, only one being shown in the drawing. The counter pile roller 18 rotates in the direction of the arrow 20 while the tufted fabric moves in the direction of the arrow 21.

In the description of the production of the fabrics of FIGURES 2 to 5 it has been assumed that the backing fabric was tufted with spun yarns. It has been indicated above that it is also possible to use tow composed of a large number of continuous filaments with or without definite twist. When using such tow during the tufting operation, it is necessary for the subsequent pulling operation to not only pull the filaments from the pile loops but also to break the filaments into random lengths. The breaking of the filaments results from pulling the filaments until enough tension is applied to cause breakage.

Referring again to FIGURE 6, there is shown in dot-dash lines the outline of loops which have been formed in the backing fabric 10 by the use of tow. Those loops are designated by the reference numeral 22 and the longitudinally spaced portions of the tow on the opposite face of the backing fabric are designated by the reference numeral 23. A single filament of the tow is shown in full lines in FIGURE 6 and is designated by the reference numeral 24. Referring now to FIGURE 7, it will be seen that in pulling the filament 24 that filament has been broken at the points 25 and 26 and that individual random lengths 27, 28 and 29 of the filament have been pulled from loops 22. The positions which the random lengths 27, 28 and 29 originally occupied in the loops 22 are indicated by dotted lines in FIGURE 7. The foregoing is a typical action which occurs when producing the fabric of FIGURE 3 from a tufted fabric which has been tufted with tow.

A somewhat similar action occurs in producing the fabric of FIGURE 4 from a tufted fabric which has been tufted with tow. Referring to FIGURE 8, a filament 30 has been broken at the points 31 and 32 and the random lengths 33, 34, 35 and 36 of the filament 30 have been pulled from the tow. The positions which the random lengths 33, 34, 35 and 36 originally occupied in the tow are indicated by dotted lines.

FIGURE 9 illustrates an example of what happens to one filament when producing the fabric of FIGURE 5 from a tufted fabric which has been tufted with tow. A filament 37 has been broken at the points 38 and 39. A random length 40 of the filament 37 has been pulled from one face of the fabric and a random length 41 has been pulled from the other face of the fabric. It will be seen that the random lengths 40 and 41 are integral. The

positions which those lengths originally occupied in the tow are indicated by dotted lines.

The use of spun yarns for tufting the backing fabric is preferred. The spun yarns must be composed of fibers at least three times and preferably at least seven or eight times the height of the pile loops. We prefer to use yarns spun from fibers of staple length at least one and one-half inches and preferably from two and one-half inches to three inches. The height of the pile loops **14** may range from one-quarter inch or less to about three-quarters of an inch. Generally speaking, the very coarse spun yarns will give the best results. Excellent results have been obtained by the use of .75/1 yarns having a twist multipler of 3.66. Excellent results have also been obtained by the use of 1.15/1 spun yarns having a twist multipler of 4.08. When using the latter yarns it has been found preferable to feed two yarn ends to each needle of the tufting machine.

When tow is used to tuft the backing fabric, the tow should be of at least 1,300 and preferably 4,000 to 5,000 denier or more and should preferably be composed of at least 150 filaments.

Irrespective of whether spun yarns or tow are used as the tufting strands, the unit size of the strands should be equivalent to 4s (cotton count) or coarser and the twist multipler should not exceed about five. As many as four ends of such strands may be fed to each needle of the tufting machine.

The gauge of the pile loops (distance between adjacent longitudinal rows of pile loops), the height of the pile loops and the number of loops per inch in each longitudinal row have a bearing on the quality of the product which is obtained. Good results have been obtained with gauges from one-eighth to three-sixteenths of an inch, and with pile heights of from five-sixteenths to three quarters of an inch and with four and one-quarter to nine loops per inch in each longitudinal row. In general, better fabrics appear to be obtained with narrower gauges and with greater numbers of loops per inch in the longitudinal rows.

Nylon (either polyamide fiber or polyamine-caprolactum fiber), modified acrylonitrile fiber (Verel), acetate rayon and other synthetic fibers may be used, either in the form of spun yarns or as tow.

The following specific examples of typical fabrics produced in accordance with the invention will be helpful to a complete understanding thereof.

EXAMPLE I

Pile yarns of size .75/1 spun from modified acrylonitrile (Verel) fibers of 16 denier, two and one-half inch staple, were tufted in a sateen backing fabric to form pile loops of a height of five-sixteenths of an inch, with the distance between longitudinal rows of loops (gauge) being one-eighth of an inch and there being six loops per inch longitudinally of each row. The fibers were pulled by subjecting the pile loop face of the fabric to the action of a box napper, the fabric making four passes through the napper. There resulted a fabric in which the pile loops had substantially completely disappeared and been replaced by individual fibers of random lengths of as much as two inches or more. The fabric bore a resemblance in appearance and texture to animal fur. This fabric is diagrammatically illustrated in FIGURE 3 of the drawings.

EXAMPLE II

Tow of 4,000 denier (consisting of 200 filaments of 20 denier each) of acetate yarn was tufted through a sateen backing fabric to produce loops of a height of five-sixteenths of an inch. The distance (gauge) between longitudinal rows of loops was one-eighth of an inch and there were six loops per inch in each longitudinal row. The individual filaments in the loops were then pulled and the filaments broken by running the tufted fabric through a box napper as outlined in Example I. The pile loops completely disappeared and were replaced by individual fibers of lengths up to three inches. There appeared to be considerably greater variation in the lengths of the fleece forming fibers of this fabric as compared to the fibers of the fabric of Example I. The fabric of Example II also bore a resemblance to animal fur.

The fabric illustrated in FIGURE 3 is particularly suitable for use as a rug or carpet. This fabric also can be used as imitation fur for outer-wear clothing and can be used as interlining and as lining for coats and jackets. The fabric of FIGURE 3 can also be used for mop heads, dust tool covers, buffing covers for polishing, and many other uses.

The fabric of FIGURE 4 can be used as a reversible rug. It is also contemplated that this fabric can be produced from low cost backing fabric and by the use of inexpensive tufting yarn to provide a carpet pad or underlay.

The fabric illustrated in FIGURE 5 can be used for the purposes outlined above and for any other purpose in which it is desirable to have a soft, fleecelike surface on both faces of the fabric.

The fleece of any of the fabrics can be sheared in any conventional manner to obtain uniform height of the fleecelike surface.

We have illustrated and described exemplary embodiments of our invention to enable those skilled in the art to understand and practice the same. It will be understood that various modifications may be utilized without departing from the broader scope of the invention which is defined by the following claims.

Having thus described our invention, we claim:

1. A tufted fabric having a deep, soft, fleecelike surface on a face thereof, said fabric comprising a distinguishable and self-sustaining backing fabric, a plurality of discrete lengths of spun yarns aligned in a plurality of closely spaced rows extending longitudinally of said backing fabric with adjacent lengths in each row being in contiguous relationship, each said length of spun yarn lying against one face of said backing fabric with its ends extending through openings in said backing fabric to the other face thereof, the adjacent ends of contiguous discrete lengths in each of said longitudinal rows extending through the same opening in the backing fabric to make said rows substantially continuous, the length of the fibers of each spun yarn being at least about six times the discrete length of the spun yarn with free ends of said fibers extending individually in twist-free condition to random lengths from each end of each yarn and forming a deep, soft, fleecelike surface on said other face of said backing fabric.

2. A tufted fabric having a deep, soft, fleecelike surface on a face thereof, said fabric comprising a distinguishable and self-sustaining backing fabric, a plurality of discrete lengths of multiple component strands aligned in a plurality of closely spaced rows extending longitudinally of said backing fabric with adjacent lengths in each row being in contiguous relationship, each said discrete length of strand lying against one face of said backing fabric with its ends extending through openings in said backing fabric to the other face thereof, the adjacent ends of contiguous discrete lengths in each of said longitudinal rows extending through the same opening in the backing fabric to make said rows substantially continuous, the length of the components of each strand being at least about six times the discrete length of the strand with free ends of said components extending individually in twist-free condition to random lengths from each end of each discrete length of strand and forming a deep, soft, fleecelike surface on said other face of said backing fabric.

3. A tufted fabric having a deep, soft, fleecelike surface on a face thereof, said fabric comprising a distinguishable and self-sustaining backing fabric, a plurality of discrete lengths of tow aligned in a plurality of closely spaced rows extending longitudinally of said backing fabric with

adjacent lengths in each row being in contiguous relationship, each said discrete length of tow lying against one face of said backing fabric with its ends extending through openings in said backing fabric to the other face thereof, the adjacent ends of contiguous discrete lengths in each of said longitudinal rows extending through the same opening in the backing fabric to make said rows substantially continuous, the length of the filaments of each tow being at least about six times the discrete length of the tow with free ends of said filaments diverging and extending individually to random lengths from each end of each tow and forming a deep, soft, fleecelike surface on said other face of said backing fabric.

4. A tufted fabric having a deep, soft, fleecelike surface on a first face thereof, said fabric comprising a distinguishable and self-sustaining backing fabric, a plurality of short lengths of spun yarns aligned in a plurality of longitudinal rows with adjacent lengths in each row being in contiguous relationship, each said short length of spun yarn lying against the opposite face of said backing fabric with its ends extending through openings in the backing fabric to said first face thereof, the adjacent ends of contiguous short lengths in each of said longitudinal rows extending through the same opening in the backing fabric to make said rows substantially continuous, each said short length of spun yarn being composed of fibers of average length at least about ten times the length of said short length of spun yarn and with ends of such fibers extending in twist-free condition to random lengths beyond said ends of said spun yarns to form a fleecelike surface on said first face of said fabric.

5. A fabric as defined in claim 4 which includes a coating of a binder material on said opposite face of said backing fabric binding said spun yarns thereto.

6. A tufted fabric having a deep, soft, fleecelike surface on a first face thereof, said fabric comprising a distinguishable and self-sustaining backing fabric, a plurality of short lengths of spun yarns aligned in a plurality of longitudinal rows with adjacent lengths in each row being in contiguous relationship, each said spun yarn lying against the opposite face of said backing fabric with the ends thereof extending through openings in the backing fabric to said first face thereof, the adjacent ends of contiguous short lengths in each of said longitudinal rows extending through the same opening in said backing fabric to make said rows substantially continuous, each said short length of spun yarn having a length of not more than about one-fourth inch but being composed of fibers of average length at least about one and one-half inches with ends of such fibers extending in twist-free condition to random lengths from said ends of said spun yarns to form a fleecelike surface on said first face of said fabric.

7. A tufted fabric having a deep, soft, fleecelike surface on a first face thereof, said fabric comprising a distinguishable and self-sustaining backing fabric, a plurality of short lengths of tow, each consisting of a large number of filaments collected in a rope-like form, said lengths of tow being arranged longitudinally in a plurality of longitudinal rows with adjacent lengths in each row being in contiguous relationship, each said length of tow lying against the opposite face of said backing fabric with the ends thereof extending through openings in said backing fabric to said first face thereof, the adjacent ends of contiguous short lengths in each of said longitudinal rows extending through the same opening in said backing fabric to make said rows substantially continuous, each said length of tow having a length of not more than about one-fourth inch but with a majority of the filaments thereof being at least about one and one-half inches in length with said filaments extending from said ends of said lengths of tow to random lengths to form a fleecelike surface on said first face of said fabric.

8. A fabric as defined in claim 7 which includes a coating of binder material on said opposite face of said backing fabric.

9. A tufted fabric having a deep, soft, fleecelike surface of twist-free individual fibers on one face thereof and a surface of pile loops on the other face thereof, said fabric comprising a distinguishable and self-sustaining backing fabric, a plurality of spun yarns aligned in a plurality of longitudinal rows, longitudinally spaced portions of each said spun yarn lying against one face of said backing fabric with adjacent portions of said yarns being in contiguous relationship to make said rows substantially continuous and with intermediate portions of said yarns extending through openings in the backing fabric and forming pile loops on the other face thereof with both legs of each of said pile loops extending through the same opening in said backing fabric, each said spun yarn being composed of fibers of average length at least about three times the height of said pile loops, and the ends of some such fibers projecting in twist-free condition from said longitudinally spaced portions of said spun yarns on said one face of said backing fabric to random lengths substantially greater than the height of said loops to form a fleecelike surface on said one face of said fabric.

10. A tufted fabric having a deep, soft, fleecelike surface on both faces thereof, said fabric comprising a distinguishable and self-sustaining backing fabric, a plurality of short lengths of multiple component strands aligned in a plurality of longitudinal rows with adjacent lengths in each row being in contiguous relationsihp, each said short length of strand lying against one face of said backing fabric with its ends extending through openings in the backing fabric to the other face thereof, the adjacent ends of contiguous short lengths in each of said longitudinal rows extending through the same opening in said backing fabric to make said rows substantially continuous, each said short length of strand being composed of components of average lengths at least about six times the length of the short length of strand, free ends of certain of such components extending in twist-free condition to random lengths beyond said ends of said strands to form a fleecelike surface on said other face of said fabric, and free ends of other of said components extending in twist-free condition to random lengths from between the ends of said strands to form a fleecelike surface on said one face of said fabric.

11. A tufted fabric having a deep, soft, fleecelike surface on both faces thereof, said fabric comprising a distinguishable and self-sustaining backing fabric, a plurality of short discrete lengths of spun yarns aligned in a plurality of longitudinal rows with adjacent lengths in each row being in contiguous relationship, each said short discrete length of spun yarn lying against one face of said backing fabric with its ends extending through openings in the backing fabric to the other face thereof, the adjacent ends of contiguous discrete lengths in each of said longitudinal rows extending through the same opening in the backing fabric to make said rows subtsantially continuous, each said short length of spun yarn being composed of fibers of average length at least about six times the length of the short discrete length of spun yarn, free ends of certain of such fibers extending in twist-free condition to random lengths beyond said ends of said spun yarns to form a fleecelike surface on said other face of said fabric, and free ends of other of said fibers extending in twist-free condition to random lengths from between the ends of said spun yarns to form a fleecelike surface on said one face of said fabric.

12. A tufted fabric having a deep, soft, fleecelike surface on a first face thereof, said fabric comprising a distinguishable and self-sustaining backing fabric, a plurality of short lengths of multiple component strands aligned in a plurality of longitudinal rows with adjacent lengths in each row being in contiguous relationship, each said short length of strand lying against the opposite face of said backing fabric with its ends extending through open-

ings in the backing fabric to said first face thereof, the adjacent ends of contiguous short lengths in each of said longitudinal rows extending through the same opening in said backing fabric to make said rows substantially continuous, each said short length of strand being in composite of components of average length at least about six times the length of the short length of strand and with the ends of such components extending in twist-free condition to random lengths beyond said ends of said strands to form a fleecelike surface on said first face of said fabric.

13. A tufted fabric having a deep, soft, fleecelike surface as described in claim 12 wherein ends of substantially all of said strand components extend in twist free conditioin to random lengths from the ends of said short lengths of strands.

References Cited in the file of this patent

UNITED STATES PATENTS

2,012,184	Cobb	Aug. 20, 1935
2,144,555	Sudell	Jan. 17, 1939
2,671,475	Giondomenici	Mar. 9, 1954
2,686,538	Nelson	Aug. 17, 1954
2,790,225	Cogovan et al.	Apr. 30, 1957
2,825,958	Chandler	Mar. 11, 1958
2,857,651	Keen	Oct. 28, 1958
2,857,652	McNally et al.	Oct. 28, 1958
2,866,255	Keen	Dec. 30, 1958
2,875,504	White	Mar. 3, 1959

FOREIGN PATENTS

145,840	Australia	Mar. 24, 1952

UNITED STATES PATENT OFFICE

CERTIFICATE OF CORRECTION

May 15, 1962

Patent No. 3,034,194

Amos U. Priester, Jr., et al.

It is hereby certified that error appears in the above numbered patent requiring correction and that the said Letters Patent should read as corrected below.

Column 1, line 63, for "digrammatic" read -- diagrammatic --; column 9, line 5, for "in" read -- a --.

Signed and sealed this 30th day of April 1963.

(SEAL)
Attest:

ERNEST W. SWIDER
Attesting Officer

DAVID L. LADD
Commissioner of Patents