Nov. 11, 1941. A. BLOCH 2,261,951

METHOD AND MEANS FOR RECEIVING MODULATED WAVES

Filed Aug. 9, 1938 3 Sheets-Sheet 1

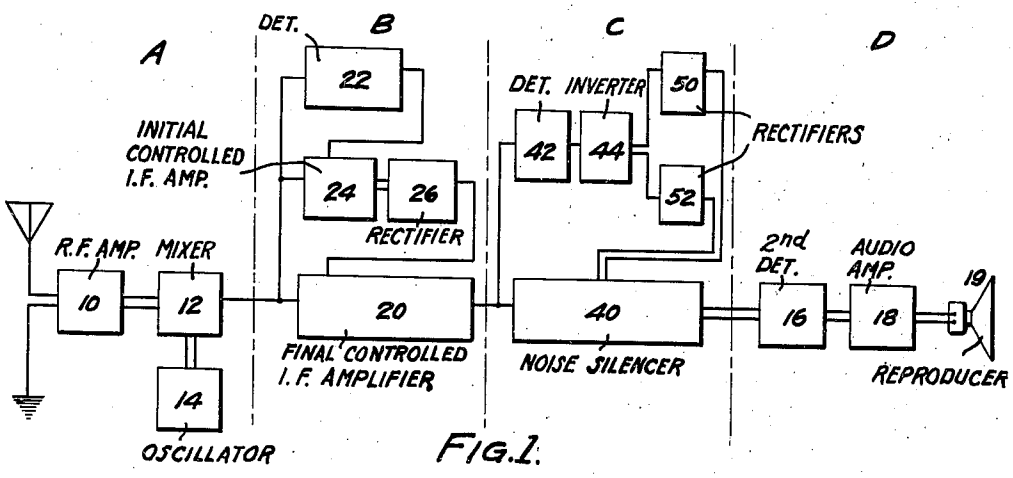

FIG. 1.

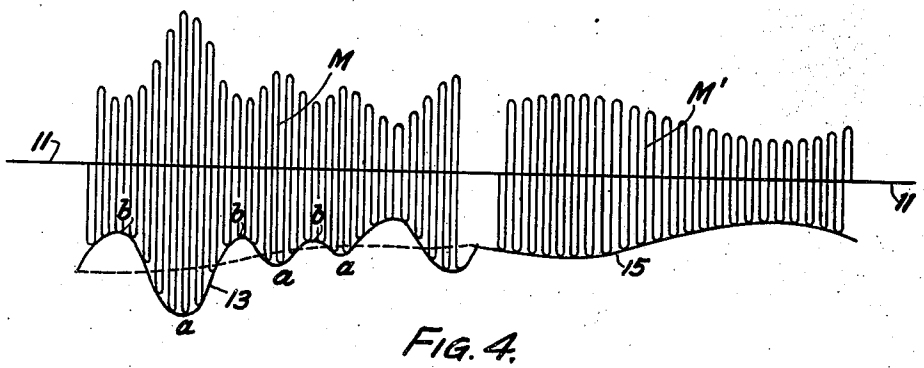

FIG. 4.

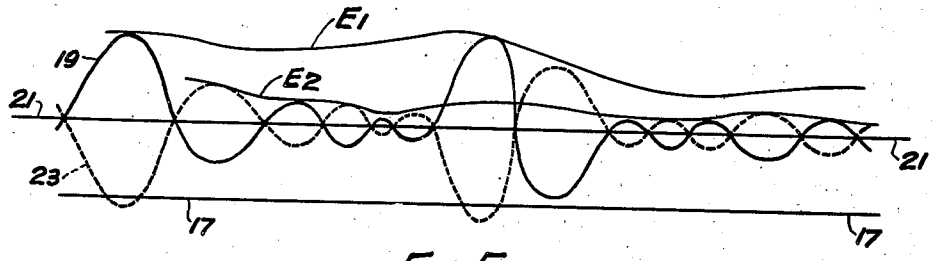

FIG. 5.

INVENTOR
Alan Bloch
BY Benjamin Fabre
ATTORNEY

Nov. 11, 1941. A. BLOCH 2,261,951

METHOD AND MEANS FOR RECEIVING MODULATED WAVES

Filed Aug. 9, 1938 3 Sheets-Sheet 2

FIG. 2.

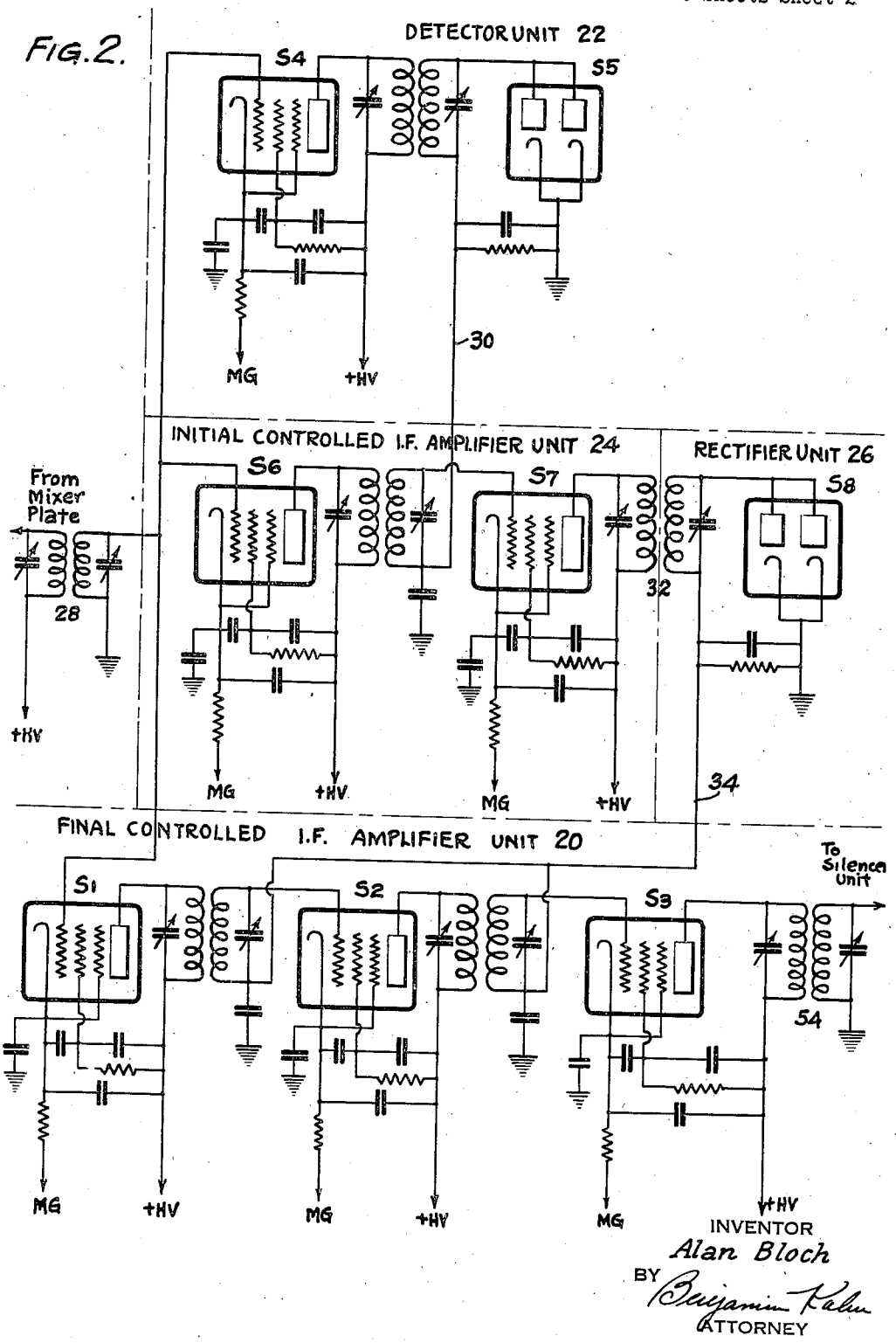

INVENTOR
Alan Bloch
BY Benjamin Kahn
ATTORNEY

Nov. 11, 1941. A. BLOCH 2,261,951

METHOD AND MEANS FOR RECEIVING MODULATED WAVES

Filed Aug. 9, 1938. 3 Sheets-Sheet 3

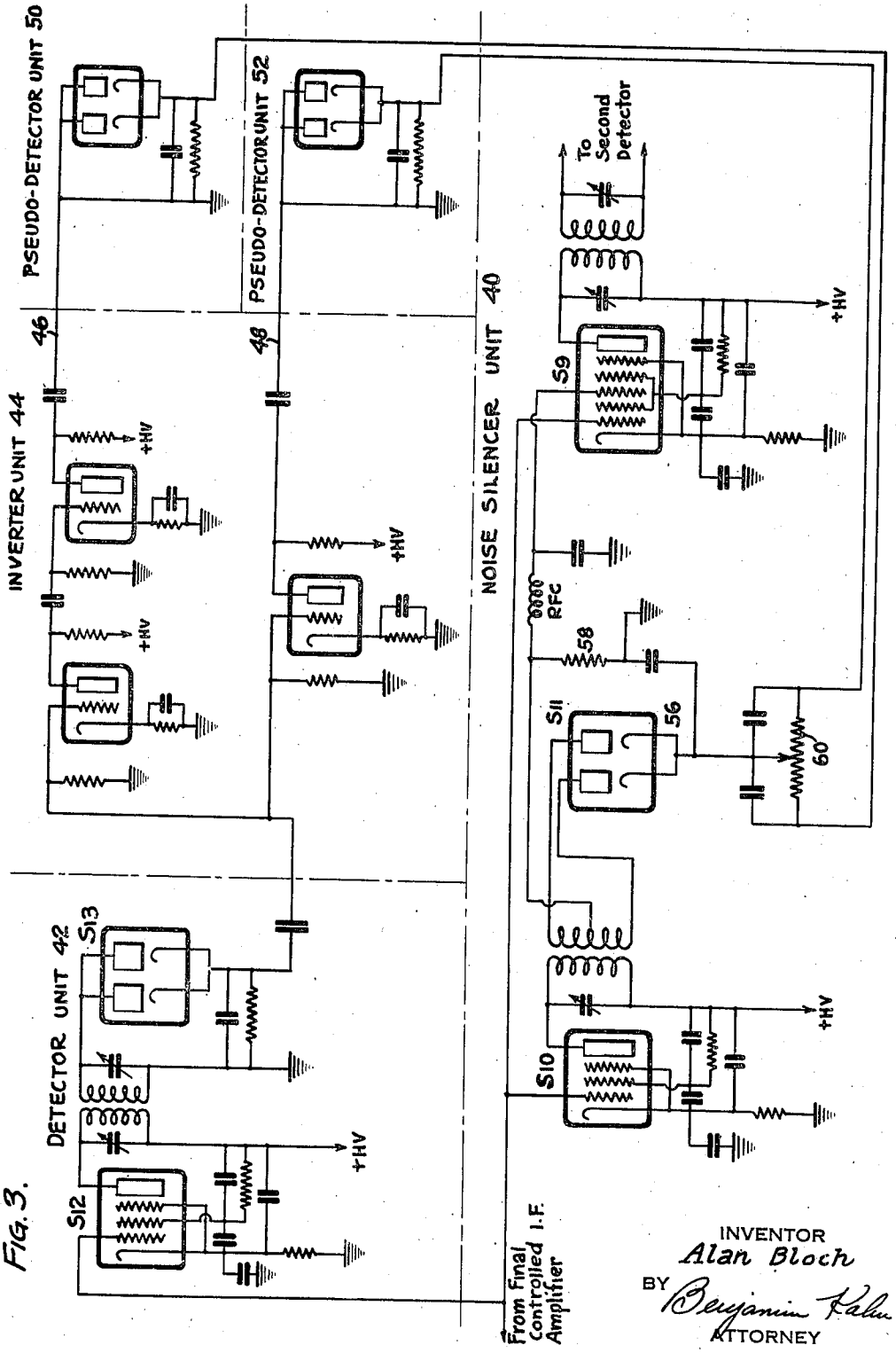

FIG. 3.

INVENTOR
Alan Bloch
BY Benjamin Kalin
ATTORNEY

Patented Nov. 11, 1941 2,261,951

UNITED STATES PATENT OFFICE

2,261,951

METHOD AND MEANS FOR RECEIVING MODULATED WAVES

Alan Bloch, Hillsdale, N. Y.

Application August 9, 1938, Serial No. 223,827

10 Claims. (Cl. 250—20)

This invention relates to an electrical receiver, particularly to a method and means for correcting certain distortions of incoming waves, and is more particularly designed to eliminate distortion effects such as fading, static distortion, or both. This invention is adaptable for use in connection with radio, telephone, television receivers, and the like.

One of the objects is to remove the fading effects from an incoming wave and another object is to eliminate static from an incoming wave.

In carrying out my invention, it is contemplated to employ a duplex-series automatic volume control system preceding a static elimination circuit, which system is not affected by static or other similar noise interference, and to provide an improved compounded threshold voltage to a static elimination or noise silencing circuit embodied in the receiver.

It is my object to provide a receiver which embodies a novel method of treating an incoming wave whereby the objectionable effects of fading and static in the order named, are nullified to a point of virtual elimination.

The drawings illustrate an embodiment of my invention, including my novel circuits, in a radio receiver which shows my novel method of handling a modulated incoming wave.

Although a single embodiment of my invention is illustrated in the drawings, this embodiment is employed merely to explain the essential principles of the invention, it being understood that other applications of these principles as defined in the claims may be had in other related apparatus without departing from the spirit and scope of the invention.

In the drawings:

Figure 1 is a schematic block diagram of a radio receiver.

Figure 2 is a detailed diagram of a portion of Figure 1 including the said duplex-series automatic volume control system.

Figure 3 is a detailed diagram of another portion of Figure 1 including a static elimination circuit and my novel circuits for obtaining the said compound threshold voltage for same.

Figures 4 and 5 are explanatory modulation diagrams having reference to Figures 2 and 3 respectively.

Referring to Figure 1 the receiver shown is of the superheterodyne type and may best be considered as consisting of four sections, A, B, C, and D. The section A may contain radio frequency amplifier **10**, if empoyed, a mixer **12**, and an oscillator **14**, all for the purpose of providing an intermediate frequency input to the portion or section B which comprises the controlled intermediaate frequency amplifier together with its circuits for obtaining the controlling voltage for the duplex-series automatic volume control system, hereinafter described in detail. The output of the section B consists of static together with the message free from the effects of fading, and provides an input for section C.

Section C comprises a static eliminator or noise silencer circuit coupled with my novel circuits designed to provide the compound threshold voltage for the eliminator circuit, giving a message free from the effects of static and fading to the following section D. This section C will also be described in detail later.

The section D consists of the usual second detector **16**, audio ampifier **18**, and loud speaker or other reproducing device **19**.

Circuits of the sections A and D are well known to the art and require no further explanation, it being understood that many variations may be had in these sections.

Referring to Figure 2 the unit **20** comprises a conventional intermediate frequency amplifier S**1** feeding a novelly controlled intermediate frequency amplifier consisting, for example, of the stages S**2** and S**3** hereinafter referred to as the final controlled intermediate frequency amplifier.

The unit **22** consists of a detector S**5** and a conventional intermediate frequency amplifier S**4** for supplying a signal to the said detector circuit S**5**.

The unit **24** comprises a stage of conventional intermediate frequency amplification S**6** and a novelly controlled intermediate frequency amplifier S**7** of one or more stages, hereinafter referred to as the initial controlled intermediate frequency amplifier.

The unit **26** consists of a rectifier S**8**. It may be found desirable to include in this unit a stage or stages of amplification preceding or following this rectifier.

Referring to Figures 2 and 4, the line **11** represents a no-signal voltage. The reference character M designates a carrier modulated by a message and distorted by fading and static. This signal appears at the transformer **28**, Fig. 2. The line **13** is the lower audio envelope of the said carrier M and represents the output of the detector S**5** at the point **30**. Reference character M' designates the carrier M after all message modulation and static distortion at audio frequencies have been removed, but with the effects of fading still present. This signal appears at the trans-

former 32, Fig. 2. The line 15 is the lower envelope of the carrier M' and represents the output of rectifier S8 at point 34.

The output of the mixer 12, hereinbefore mentioned, is coupled through the transformer 28 to the stages S4, S6, and S1 in parallel, and hence the input to these stages consists of the modulated and distorted carrier M at intermediate frequency. The carrier M is distorted by fading and static, or both, providing of course that fading and static are present.

This carrier M is amplified by the stage S4 which feeds the detector S5. The output of the detector S5 appears at the point 30 and consists of the audio component 13 of the said distorted carrier M and is the initial automatic volume control voltage, i. e. the controlling voltage for the said initial controlled amplifier S7. The same carrier M is also amplified in stages S6 and S7 of the amplifier unit 24. The said initial automatic volume control voltage at 30 is adapted to control the gain of the initial controlled amplifier S7 so that its output at the transformer 32 consists of carrier M' free from modulation and distortion at audio frequencies.

The initial automatic volume control voltage at point 30 being the lower envelope 13 of the modulated and distorted carrier M, becomes more negative at positive modulation than at negative modulation. Hence, the gain of S7 is lowest at points of maximum positive modulation as at *a*—*a*—*a* and highest at points of maximum negative modulation as at *b*—*b*—*b* (Fig. 4). In other words, the gain of S7 depends on the carrier amplitude, increasing when said amplitude decreases and vice versa. The net effect of this is to remove in S7 substantially all modulation at audio frequencies from the carrier M.

Thus the input to the rectifier S8 consists of the carrier M' which is free from modulation and static distortion, but yet subject to distortion by fading. The output of S8 at the point 34 is the voltage 15, i. e. the final automatic volume control voltage for the final controlled amplifier S2, S3. Now, since the input M' of S8 is free from static and modulation, varying only with fading, the output of S8 is independent of static and of percentage of modulation, and is therefore responsive only to fading.

This final automatic volume control voltage 15 at 34 controls the gain of the final controlled intermediate frequency amplifier S2, S3 in the usual manner, rendering the output free from fading and maintaining the message level constant as represented by the straight line 21 in Fig. 5.

Since this condition prevails beyond section B there is no distortion due to fading in sections C or D and no fading is seen in any of the lines of Fig. 5, which represents conditions in section C, and hence there is no mention of fading in the explanation of section C.

Referring to Figure 3, the unit 40 includes a portion of a noise silencing circuit of any suitable type (such as the "Lamb" noise silencing circuit published in "The Radio Amateur's Handbook," by The American Radio Relay League, Inc., page 142 ff, 1938 edition) and a voltage divider or potentiometer, 60.

The detector unit 42 consists of an amplifier S12 which may comprise one or more stages. This feeds a detector S13 of any suitable type.

The inverter unit 44 comprises an audio amplification system fed by S13 and is arranged to supply an audio signal to two points 46 and 48 so that the voltage swings are substantially equal and in opposite directions at these two points. This may be done, for example, by providing two parallel amplifiers, one comprising one stage more than the other, both amplifiers having practically the same gain.

Units 50 and 52 are rectifiers with filters fed by the outputs of unit 44 at the points 46 and 48 respectively. These circuits are characterized by their relatively long time constants and when fed with audio frequency, their output is the envelope of their input.

Referring to Figure 5, the line 17 is a no-signal voltage. The line 19 represents the upper envelope of a carrier modulated and distorted, from which the effects of fading have been removed in section B. This represents the output at point 46 of the inverter unit 44.

Line 21 represents the upper envelope of an unmodulated and undistorted carrier. The line 23 is the reflection in 21 of 19 and represents the output at the point 48 of the inverter unit 44.

The line E1 is the upper envelope of 19 and E2 is the upper envelope of 23.

The tube S9 of the silencer circuit acts as a silencing tube, i. e. the signal is impressed on one grid and the silencing voltage is applied under certain conditions to another grid to render the tube inoperative by momentarily biasing it to cut-off. The output of S9 drives the second detector and audio section D (Fig. 1). In addition, there is the amplifier S10 (which may consist of one or more stages) and a rectifier S11 fed by the amplifier S10.

The output of final controlled intermediate frequency amplifier S2, S3 is coupled through transformer 54 to S12, S10, and S9 in parallel. This output is the carrier whose upper envelope is represented by the line 19, Figure 5. This carrier is amplified by S10 and the output thereof is fed to the rectifier S11.

The cathode 56 of this rectifier S11 is maintained at a positive potential, which is known and referred to as the threshold voltage.

Whenever the potential of one of the plates of S11 exceeds that of the cathode 56, current flows in the plate circuit of S11 and the resulting voltage drop across resistor 58 biases S9 to cut-off.

In general, an ideal threshold voltage for a noise silencer circuit may briefly be described as the envelope of the audio envelope of the modulated carrier, as the carrier would be received if there were no static and no fading. That is, an ideal threshold voltage would be unaffected by static, and would also be automatically responsive to the variations in the percentage of modulation of the transmitted signal. However, it will be seen from this description that my compound threshold voltage closely approximates this ideal threshold voltage. It is the envelope of the audio envelope of the modulated carrier as it is received with only static, combined with the envelope of the inverted audio envelope of the same modulated carrier. Hence, it is responsive to variation in the percentage of modulation of the transmitted signal, and yet unaffected by static.

The unit 42 is driven in parallel with the silencer 40, and the output of the detector S13 is the audio envelope 19. This is amplified and inverted in the unit 44, and therefore the signal 19 appears at 46, and the signal 23 appears at 48. The outputs of the rectifiers 50 and 52 are the

envelopes E1 and E2. These voltages are known as the upper and lower threshold voltages respectively. These voltages are applied at opposite ends of resistor 60, and the compound threshold voltage obtained from a tap on said resistor is applied to the cathode 56 of the rectifier S11 of the silencer unit as was previously explained.

Inasmuch as the effect of static is to raise the upper threshold voltage and depress the lower threshold voltage, the said compound or combined threshold voltage closely approximates the ideal threshold voltage for the noise silencer circuit.

It is to be noted that while this threshold voltage is applied to the silencer circuit at the usual point, the values of this threshold voltage are different from those of the prior art in that it is derived from two other varying voltages, one (the upper threshold voltage) being dependent upon the degree of positive modulation and the other (the lower threshold voltage) being dependent upon the degree of negative modulation, these voltages compensating each other by virtue of their opposite responses to static, the effects of fading having been earlier removed by the duplex-series automatic volume control system in the intermediate frequency section B.

It should be noted that while the lower threshold voltage is obtained in the embodiment here illustrated by inverting the audio envelope and then taking the upper envelope thereof; it may also be obtained by taking the lower envelope of the audio envelope and then inverting the said lower envelope. The net result, i. e. the lower threshold voltage, is the same in both cases.

It is to be understood that the principles embodied in this illustration may be likewise applied to television receiving apparatus as well as to telephone circuits, picture transmission systems, radio controlling equipment such as blind landing devices for aircraft, or the like. It is applicable to any circuits subject to fading, static or similar noise, or any such combined distortive effects.

In fact, my invention is applicable to any apparatus receiving a wave, of either audio or radio frequency.

Having described my invention in detail in a particular embodiment, the scope of the invention is outlined as in the following claims.

I claim:

1. A method of removing static from an incoming wave which includes silencing the noise in a portion of the wave and detecting another portion of the wave; rectifying a portion of the detected wave and inverting another portion of the detected wave; rectifying the inverted portion of the detected wave; combining the rectified portion of the detected wave with the rectified inverted portion of the detected wave as a threshold voltage; and controlling the said noise silencing with the said combined rectified portions of the wave.

2. A method of removing static from an incoming wave which includes silencing the noise in a portion of the wave and detecting another portion of the wave; rectifying a portion of the detected wave and rectifying another portion of the detected wave; inverting one of the rectified portions of the detected wave; combining the rectified portion of the detected wave with the inverted rectified portion of the detected wave as a threshold voltage; and controlling the said noise silencing with the said combined rectified portions of the wave.

3. A method of improving the reception of an incoming wave which includes detecting a portion of the wave, amplifying another portion of the wave, and amplifying still another portion of the wave; using the detected portion of the wave to control the degree of amplification of the first-mentioned amplified portion of the wave; rectifying that amplified portion of the wave; using the said rectified amplified portion of the wave to control the degree of amplification of the second-mentioned amplified portion of the wave; and silencing the noise in that second-mentioned amplified portion of the wave.

4. A method of improving the reception of an incoming wave which includes amplifying the wave to a predetermined level; silencing the noise in a portion of the wave and detecting another portion of the wave; rectifying a portion of the detected wave and inverting another portion of the detected wave; rectifying the inverted portion of the detected wave; combining the rectified portion of the detected wave with the rectified inverted portion of the detected wave as a threshold voltage; and controlling the said noise silencing with the said combined rectified portions of the wave.

5. A method of improving the reception of an incoming wave which includes amplifying the wave to a predetermined level; silencing the noise in a portion of the wave and detecting another portion of the wave; rectifying a portion of the detected wave and rectifying another portion of the detected wave; inverting one of the rectified portions of the detected wave; combining the rectified portion of the detected wave with the inverted rectified portion of the detected wave as a threshold voltage; and controlling the said noise silencing with the said combined rectified portions of the wave.

6. A method of improving the reception of an incoming wave which includes detecting a portion of the wave, amplifying another portion of the wave, and amplifying still another portion of the wave; using the detected portion of the wave to control the degree of amplification of the first-mentioned amplified portion of the wave; rectifying that amplified portion of the wave; using the said rectified amplified portion of the wave to control the degree of amplification of the second-mentioned amplified portion of the wave; silencing the noise in a portion of that second-mentioned amplified portion of the wave and detecting another portion of that second-mentioned amplified portion of the wave; rectifying a portion of the last-mentioned detected wave and inverting another portion of the last-mentioned detected wave; rectifying the inverted portion of the last-mentioned detected wave; combining the rectified portion of the last-mentioned detected wave with the rectified inverted portion of the last-mentioned detected wave as a threshold voltage; and controlling the said noise silencing with the said combined rectified portions of the wave.

7. A method of improving the reception of an incoming wave which includes detecting a portion of the wave, amplifying another portion of the wave, and amplifying still another portion of the wave; using the detected portion of the wave to control the degree of amplification of the first-mentioned amplified portion of the wave; rectifying that amplified portion of the wave; using the said rectified amplified portion of the wave to control the degree of amplifica-

tion of the second-mentioned amplified portion of the wave; silencing the noise in a portion of that second-mentioned amplified portion of the wave and detecting another portion of that second-mentioned amplified portion of the wave; rectifying a portion of the last-mentioned detected wave and rectifying another portion of the last-mentioned detected wave; inverting one of the rectified portions of the last-mentioned detected wave; combining the rectified portion of the last-mentioned detected wave with the inverted rectified portion of the last-mentioned detected wave as a threshold voltage; and controlling the said noise silencing with the said combined rectified portions of the wave.

8. In a receiver, the combination including a noise silencer circuit, a detector, an inverter, two rectifiers and a voltage divider, the output of the said detector coupled to one of the said rectifiers, the output of the said detector also coupled through the said inverter to the other of the said rectifiers, the outputs of the said rectifiers connected to the said voltage divider, and a tap on the said voltage divider connected to the said noise silencer circuit to provide a threshold voltage therefor.

9. In a receiver, the combination including a noise silencer circuit, a detector, two rectifiers, an inverter, and a voltage divider, the output of the said detector coupled to the said rectifiers, the output of one of the said rectifiers connected to the said voltage divider, the output of the other of the said rectifiers coupled to the said inverter, the output of the said inverter also applied to the said voltage divider, and a tap on the said voltage divider connected to the said noise silencer circuit to provide a threshold voltage therefor.

10. In a receiver, the combination including two rectifiers, an inverter, a voltage divider, and a noise silencer circuit, the output of one of the said rectifiers coupled to the said inverter, the output of the said inverter and the output of the other of the said rectifiers connected to the said voltage divider, and a tap on the said voltage divider providing a threshold voltage for said noise silencer circuit.

ALAN BLOCH.