March 31, 1925.

1,531,517

L. SIMMONS

ELECTRICAL COOKER

Filed Nov. 5, 1923

4 Sheets-Sheet 1

Fig. 1.

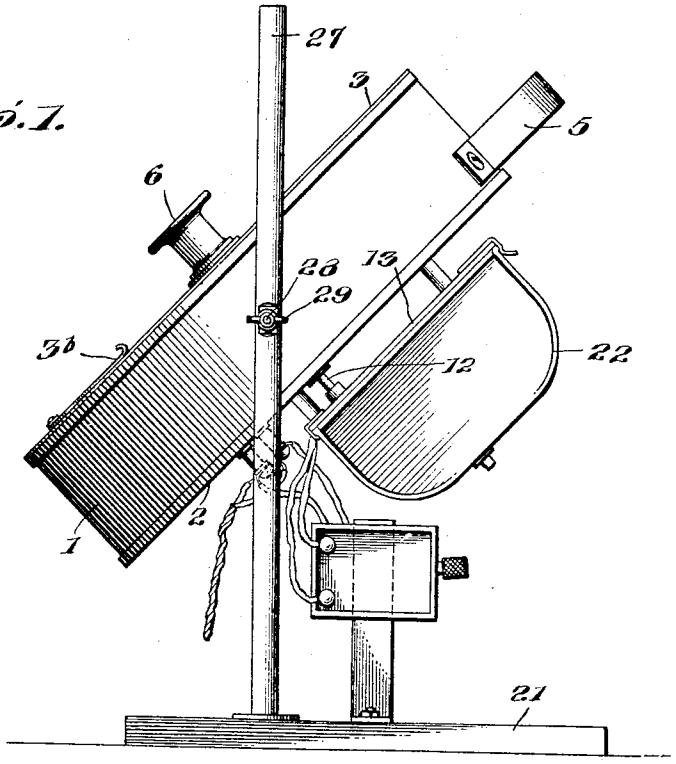

Fig. 2.

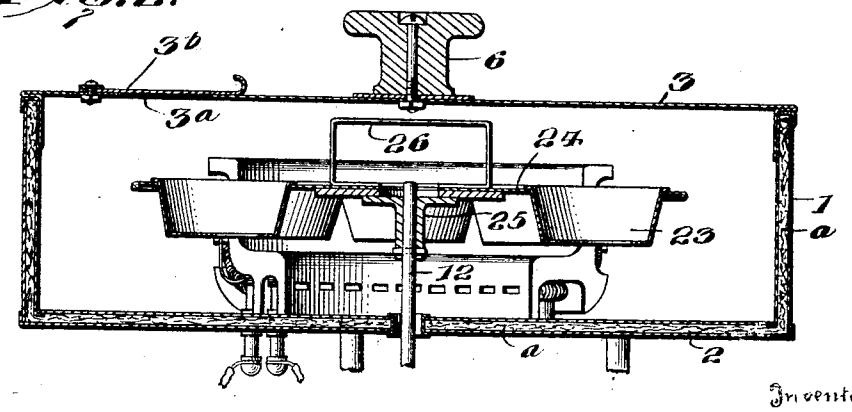

Inventor

Leo Simmons

By Hubert E. Beck

Attorney

March 31, 1925.

1,531,517

L. SIMMONS

ELECTRICAL COOKER

Filed Nov. 5, 1923

4 Sheets-Sheet 2

Fig. 3.

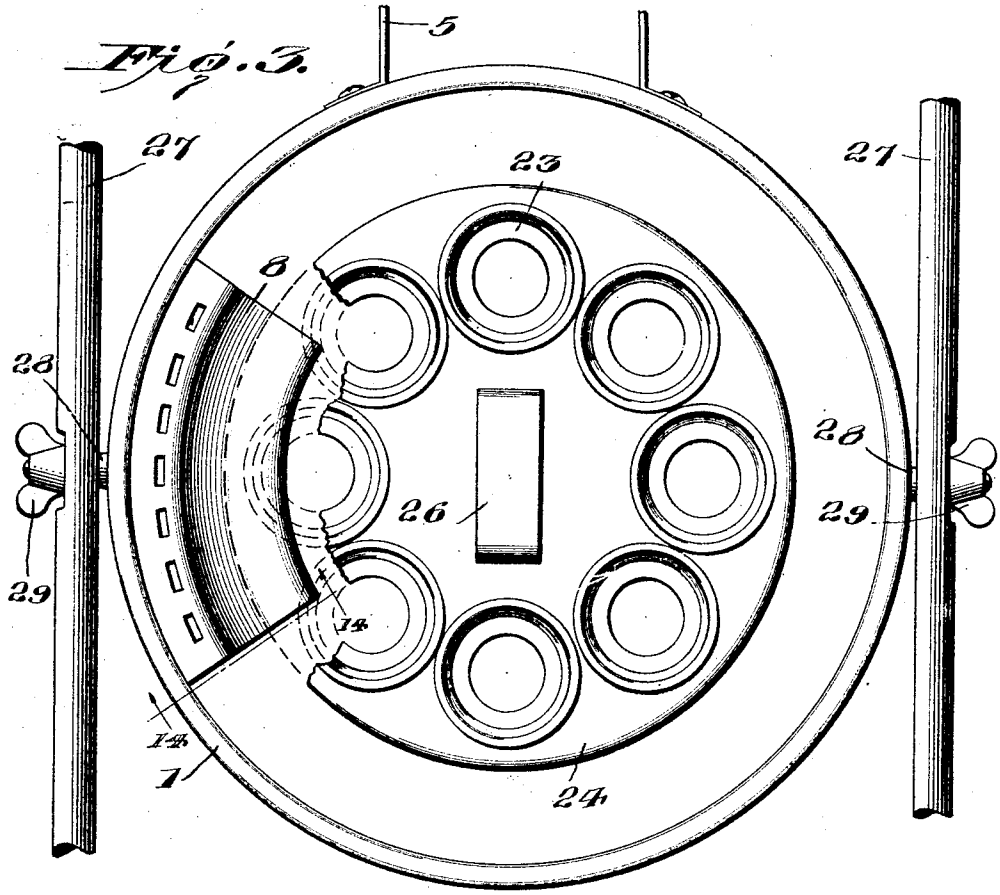

Fig. 4.

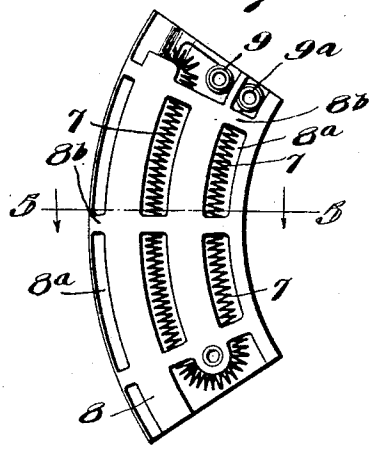

Fig. 5.

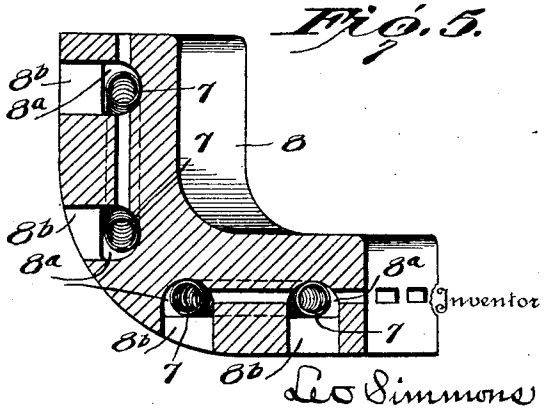

Inventor

Leo Simmons

By

Hubert E. Peck

Attorney

March 31, 1925.

1,531,517

L. SIMMONS

ELECTRICAL COOKER

Filed Nov. 5, 1923

4 Sheets-Sheet 3

Fig. 6.

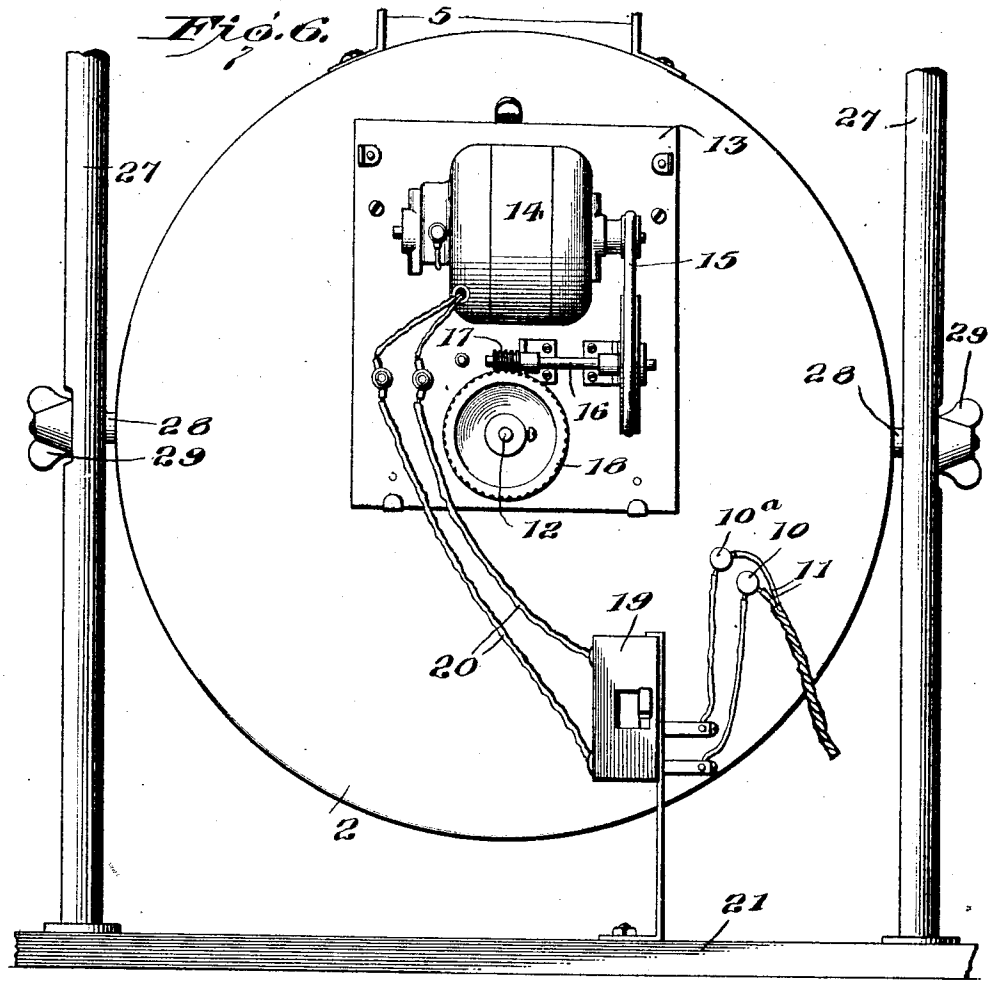

Fig. 7.

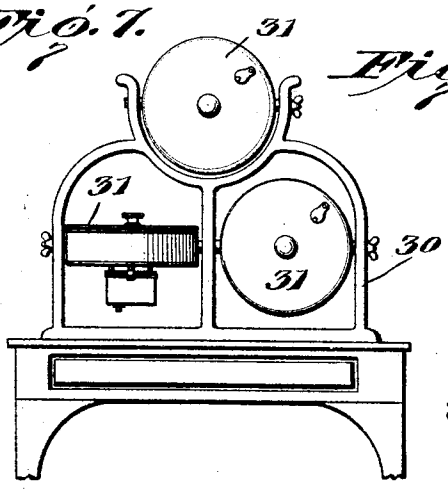

Fig. 14.

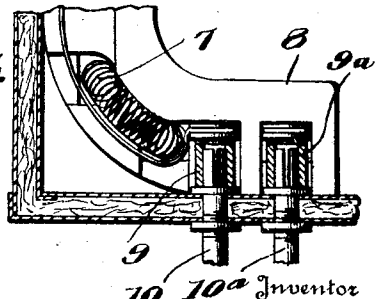

Inventor

Leo Simmons

By Hubert Pick

Attorney

March 31, 1925. 1,531,517

L. SIMMONS

ELECTRICAL COOKER

Filed Nov. 5, 1923 4 Sheets-Sheet 4

Fig. 8.

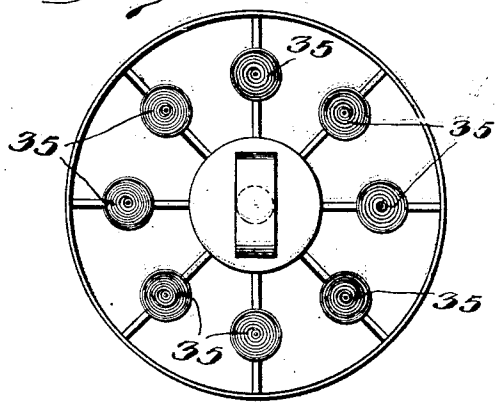

Fig. 9.

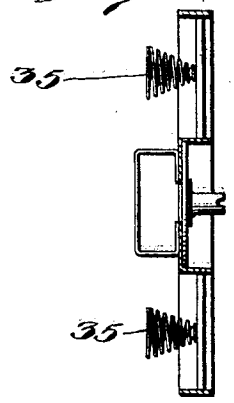

Fig. 10.

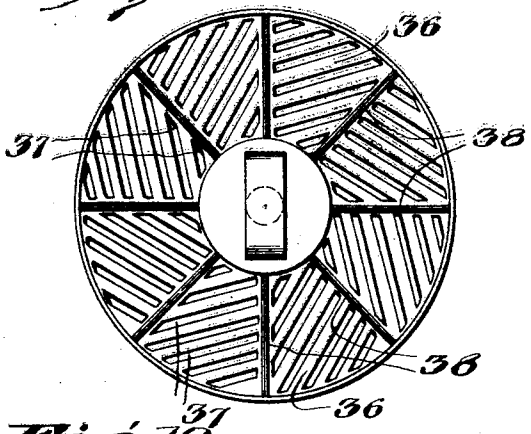

Fig. 11.

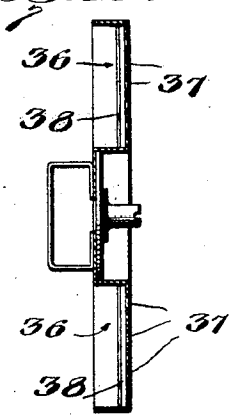

Fig. 12.

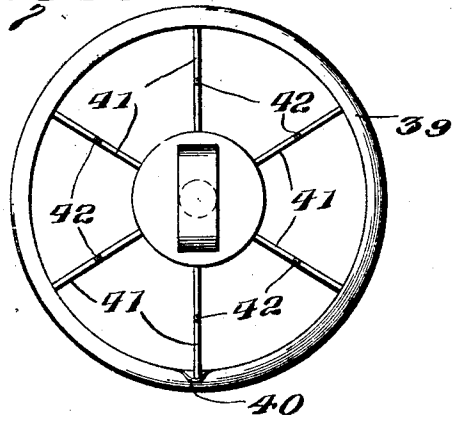

Fig. 13.

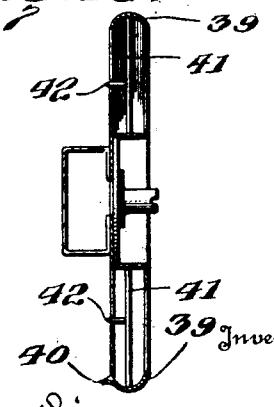

Inventor

Leo Simmons

By Hubert E. Peck Attorney

Patented Mar. 31, 1925. 1,531,517

UNITED STATES PATENT OFFICE.

LEO SIMMONS, OF WASHINGTON, DISTRICT OF COLUMBIA.

ELECTRICAL COOKER.

Application filed November 5, 1923. Serial No. 673,007.

To all whom it may concern:

Be it known that I, LEO SIMMONS, a citizen of the United States of America, and a resident of Washington, District of Columbia, have invented certain new and useful Improvements in and Relating to Electrical Cookers, of which the following is a specification.

This invention relates to electrical cooking appliances; and the objects and nature of the invention will be readily understood by those skilled in the art in the light of the following explanation of the accompanying drawings illustrating what I now believe to be the preferred mechanical expression or embodiment of my invention from among other forms, constructions and arrangements within the spirit and scope thereof.

An object of the invention is the production of an improved electrical cooking appliance for quickly and efficiently preparing food for the table.

With this and other objects in view, my invention consists in certain novel features in construction and in combinations and arrangements as more fully and particularly set forth and specified hereinafter.

Referring to the accompanying drawings, forming a part hereof:

Fig. 1 is an edge elevation of an electric cooker embodying my invention.

Fig. 2 shows the cooking drum or oven and a form of rotary reel, grill or disk therein, in cross section.

Fig. 3 is front elevation, the oven front being removed, and the rotary reel, grill or disk partially broken away to show the electric heating member in the oven.

Figs. 4 and 5 are detail views of the oven heating member.

Fig. 6 is a rear elevation showing the motor and disk or grill rotating transmission carried by the oven and arranged at the rear thereof, the motor housing being removed.

Fig. 7 is an elevation of a modified form of appliance embodying several drums or ovens.

Figs. 8, 9, 10, 11, 12 and 13 are detail views of various forms of reels, grills or disks that can be interchangeably employed in the drum or oven for holding and cooking various kinds of food.

Fig. 14 is a detail section taken in the plane of the line 14—14, Fig. 3.

In the particular example of an embodiment of my invention, illustrated for purposes of explanation, I provide a drum or oven forming a cooking chamber, and in this instance, composed of a cylindrical rim or circumferential wall 1, closed at the rear by back wall 2, and normally closed at the front by removable front wall or cover 3, in the form of a flanged slip closure telescoping with the cylindrical wall and normally held in oven-closing position by friction, although I do not wish to so limit my invention as the oven door or front can be of various forms and removably held in closed position by various means. These walls are preferably hollow and packed with asbestos or other suitable insulation *a*, to reduce heat exchange to the minimum.

The drum or oven is preferably provided with an exterior top loop or handle 5, in this instance fixed to and rising from the rim or wall 1, by which the appliance can be lifted, and the drum can be manipulated as hereinafter explained.

The oven door or front closure 3, is provided with an exterior front handle 6 by which said closure can be opened and closed. The front closure 3, is also formed with a ventilating opening or vapor vent 3^a, which can be covered and uncovered by a swingable accessible cover plate 3^b, pivoted to the closure.

The heat for the cooking operations carried on within the oven, is supplied or generated by electric power current passed through a suitable electric resistance arranged within the oven. In the example illustrated, this electric resistance is formed by a heating coil 7, intended to become heated to incandescence or red glow by the electric current. This coil is usually continuous and arranged in the form preferably of several long lengths with return bends within and carried by a porcelain or other insulating block or body 8 which with

its contained heating coil constitutes the oven heating member or element. The insulating block 8 is formed at its rear with a socket or groove 8^a, in which the coil 7, is inset or countersunk and wherein it is confined by insulating bridge or cross pieces 8^b. The groove or socket 8^a is usually continuous in the form of lengths with communicating curved portions to provide the long continuous coil 7 in the desired form leading from one electrical terminal 9, to the other electrical terminal 9^a. These terminals 9, 9^a, are usually in the form of metal tubes or sockets fixed to the insulating body and designed to snap onto and detachably fit and electrically engage the electric terminal posts 10, 10^a, fixed to and insulated from the oven wall and extending therethrough and electrically coupled to the exterior electric power current leading in wires 11, adapted to be connected to the house wiring to supply the power for heating the coil. The electric heating element is preferably removably secured in the oven in position against the rear thereof by the engagement of the terminals 9, 9^a, and 10, 10^a, and can be removed by pulling the block outwardly (when the front closure is open) with sufficient force to separate the block terminals from the oven wall terminals. The block can be restored to position by forcing the same inwardly, with the terminals alined, with sufficient pressure to cause the opposing terminals of the block and oven walls to telescope.

The block is removable to permit cleaning of the interior oven surfaces and for inspection and repair of the heating coil.

In the example shown, the block of the heating member is formed to fit against portions of the inner surfaces of the back wall and rim of the oven and hence, in this instance, is angular in cross section, and segmental in form to conform to the curvature or radius of the rim 1 but is narrow in depth with respect to the depth of the oven and exceedingly short in length with respect to the circumference of the oven. In the example shown, the heating member is located above the lower part of the oven, and about midway between the top and bottom of the oven and to one side of the center thereof and occupies but a small area of the inner surface of the rear wall of the oven and but a small fraction of the internal capacity of the oven, although I do not wish to so limit all features of my invention.

The food to be cooked in the oven, is carried by a rotary reel, grill, disk or the like, of any suitable or desirable form or construction, and removably arranged and supported within the oven, and preferably carried and rotated by a rotary driven shaft or axis 12, projecting forwardly into the oven chamber through the rear wall 2 thereof. This axis, in this instance, extends forwardly a short distance into the oven perpendicular to the oven front 3 and back 2 and is arranged centrally within the oven concentric with the circular rim 1.

In this instance, the axis or shaft 12 is carried by, journaled in and extends transversely through, an insulating material panel or motor base plate or frame 13, spaced rearwardly from, secured to and parallel with the oven back 2. This panel 13 carries a suitable electric motor 14 and any suitable speed reducing gear or transmission whereby the motor base plate or frame 13, spaced rearwardly from, secured to and parallel with the oven back 2. This panel 13 carries a suitable electric motor 14 and any suitable speed reducing gear or transmission whereby the motor is operatively connected to drive the rotary shaft 12. In this instance, the motor and transmission from the motor shaft to shaft 12, are arranged at the rear side of the panel 13. The speed reducing transmission, in the example shown, comprises a friction belt 15 from a pinion on the motor shaft to a friction gear wheel on a worm shaft 16 having a worm 17 in mesh with and driving worm wheel 18 on the rear end of shaft 12, whereby the food carrying disk within the oven is rotated at the desired low speed by the usually high speed electric motor 14.

I preferably provide any suitable means, such as rheostat 19, whereby the power current passing to the motor 14 through exterior flexible leading in wires 20 can be controlled to increase or diminish the speed of the motor and consequently the speed of rotation of the food carrying disk within the oven. This rheostat can be of any suitable or usual construction, say to give two motor speeds, and is so connected as to control the current to the motor without varying the current to the heating coil within the oven (see Fig. 6). The rheostat is usually fixed to the supporting base 21, of the appliance, below and out of contact with the oven.

The panel 13 preferably carries a removable box or housing 22, that covers the motor and transmission mounted on the panel.

The panel is fixed to but spaced rearwardly from the oven and hence the motor and parts at the rear of the panel are protected against injury by the oven heat.

Various forms of food carrying disks, can be employed, and I herein employ the term "disk" with a broad generic meaning to cover and include any form and construction of grill, reel or other rotary food carrier suitable for the purpose. The form of disk, disclosed by Figs. 2 and 3, is particularly intended for baking dough to form various food products, and hence, embodies a

circular series of spaced cups or "tins" 23, each form to receive the batch of dough and wherein it is cooked or baked to produce the desired cooked products. Said disk, embodies a plate, or spider or disk-like support 24 having a transverse center hub 25 to receive and removably slip onto the projecting drive shaft end 12. The rear end of the hub is notched to receive the transverse stop pin 12a, fixed on the shaft 12, to enable the shaft to drive or rotate the disk and to limit the rearward movement of the hub on the shaft. The hub thus removably interlocks with the shaft so that the disk and shaft rotate together yet are longitudinally separable.

The food carriers 23 are arranged in a circle concentric with the hub 25 and at the outer rim or circumferential portion of the disk and the longitudinal axis of each food carrier 23 is parallel with the axis of rotation (the hub) and transverse to the general plane of the disk.

The food carriers 23 are exposed or open at the outer side of the disk, and the disk is provided at its outer side with a central handle 26 by which the disk can be held and manipulated and applied to and removed from the shaft 12, when the oven front closure 3 is opened.

The disk is formed and constructed and the stop 12a on shaft 12 is so arranged, that the disk will be spaced from the inner surfaces of the oven front and rear walls and the rim 1, as well as from the heating member.

The heating member is spaced laterally to one side of the shaft 12, and the disk and said member are so arranged that the disk rotates in front of the heating member and within the circle that includes the out-turned angular portion of the heating member. The heating member is so relatively small that but a minor fraction of the area of the disk is at any instant directly opposite the heating member, and hence as the disk rotates, the food holders successively pass into and from more or less close proximity to the heating member. During the baking or cooking operation, the heating member raises the temperature within the oven, to the necessary degree to promote cooking, but the desired quick efficient cooking or baking action is attained by constantly passing the bodies of food in succession through the intensely heated zone in more or less close proximity to the heating member.

When the food has been cooked to the condition desired, the oven front is opened, and the food carrying disk is removed by handle 26, and the food removed from the holders 23, or the disk can be placed in a horizontal position on a plate and the food can be then served from the disk.

The disk and its food holders can be readily cleaned, after a cooking operation, and the interior of the oven can be readily cleaned.

The food to be cooked can be placed in the food holders of the disk, and the disk can then be placed in the oven on shaft 12, or in some instances, the food can be applied to the disk while that disk is in the oven.

In the example illustrated, I show the oven swingably or pivotally supported so that the same can be swung vertically to various angular positions, on a transverse axis at right angles to the axis of rotary of the food carrying rotary disk. For instance, I provide horizontal base plate 21 for a pair of rigid parallel spaced oven-supporting uprights or posts 27, fixed to and rising from the base plate. The oven is located between these posts in an elevated position above the base plate, and is pivotally supported from the posts by alined trunnions 28 mounted in the posts and having clamping nuts 29, by which the oven can, if so desired, be clamped at the desired angular position. The trunnions 28, project radially from the rim 1 of the oven so that the oven is swingable on a horizontal axis to and from the vertical and horizontal positions, or any intermediate angular positions.

The motor and driving transmission therefrom to the shaft 12, swing with the oven and such adjustment of the oven is not interfered with by the flexible power current leading in wires 11, 20. The food carrying disk, the oven and the motor and driving transmission maintain their relative positions, whatever the angular position of the oven.

This vertically swingable adjustment of the oven is desirable, and certain advantages are thereby attained. It is sometimes desirable to have the oven in the vertical position during the cooking operation, and to have the oven in upwardly tilted or even horizontal position when applying or removing the food carrying disk. Where some foods are being cooked, it is necessary that the disk and oven be in position tilted upwardly from the vertical position in order to retain the food in and to keep it flowing or spilling from the holders 23. By thus providing the tilting adjustment, the oven can be moved to and held in any angular position desired to suit various conditions of foods or other requirements.

If so desired, the ovens of this invention, can be arranged in gangs or multiple, for instance, as in Fig. 7, wherein a supporting frame 30, is provided for three separate and independent ovens 31, each independently mounted in the frame to swing vertically to the desired position, as hereinbefore explained with respect to the single oven of Fig. 1. Each oven 31, is equipped with its own motor, heating member and removale rotary food carrying disk, as hereinbefore

described. By this multiple oven arrangement, the operation of cooking various kinds of food can be carried on simultaneously, with the ovens in various positions.

Figs. 8—9, 10—11 and 12—13 show several different kinds of food carrying disks that can be used interchangeably in the one oven. Each disk embodies a frame, plate or spider carried by the central hub 25 to removably receive the shaft and having a notched inner end 12ª and a front handle 26, as hereinbefore described. The frame, plate or spider differs, however, in each instance.

Fig. 8 shows a front elevation and Fig. 9, a section of a disk having a circular series of forwardly projecting more or less flexible food carrying cups 35 formed by coiled spring wire or the like. Various kinds of food can be held in these cups while being cooked, eggs for instance.

Figs. 10 and 11 show in front elevation and section, a disk that forms a baking pan particularly intended for baking bread dough and the like. This disk forms an annular open-front pan 36 having inner and outer concentric edge rims, and rear heat-inlet openings 37, and raised dough-retaining and division-forming radial ribs 38.

Figs. 12 and 13 show in front elevation, a disk particularly intended as a rotary grill for use in broiling or otherwise cooking meat, fowl, fish, or toasting bread and other uses.

This disk embodies a circumferential annulus or rim 39 that concaved at its inner side toward the hub to form an annulus drip and grease catching and holding trough having lateral pouring lip 40. This disk is open between the rim and center hub except for radiating spokes 41 securing the rim and hub together. These spokes are provided with fixed or rigid forwardly projecting skewers or pins on which the food or substance to be cooked is impaled and thereby held to the front of the disk between the hub and rim during the cooking operation. When this disk rotates in a vertical plane, the droppings from the cooking flesh will be caught and retained by the trough-forming rim 39.

It is evident that various modifications, variations, and departures might be resorted to without departing from the spirit and scope of my invention and hence I do not wish to limit myself to the exact disclosures hereof.

What I claim is:

1. An electric cooker comprising a support, an oven carried thereby in vertically swingable adjustment, an electric heating member within said oven, and a rotary food carrier within said oven.

2. An electric cooker comprising an oven having a movable front closure, an electric heating element removably arranged within the oven, and a rotary food carrying disk removably arranged within the oven.

3. An electric cooker comprising an oven, a removable relatively-small electric heating member therein embodying an insulating block and an electric heating coil carried by the block, and a rotary food carrying disk arranged within the oven, said heating member being spaced from said disk and extending beside the same.

4. An electric cooker comprising an oven having a removable closure, means whereby said oven can be held in a vertical, inclined or horizontal position, an electric heating member arranged in said oven, and a rotary food carrying disk removably arranged in said oven.

5. An electric cooker comprising on a drum-like oven having an open front, a front closure normally closing said front, a rotary food carrying disk in said oven removable and insertable through said front when open, and a heating member at the rear of said oven above the lower portion of the interior thereof.

6. An electric cooker comprising an oven, a rotary food carrying disk therein and spaced from the oven walls and constructed and arranged to hold the food exposed at the disk front, and an angular relatively-small electric heating member within the oven and projecting beyond the disk rim and beside one side face of the disk, said member being spaced from the disk.

7. An electric cooker comprising an oven, a rotary drive shaft projecting forwardly and centrally into the oven, a support for said shaft, said support being arranged at the exterior of and carried by said oven, an electric motor and power transmission therefrom to drive said shaft, said motor and transmission carried by said support, an electric heating member in said oven, and a rotary food carrying disk in said oven and carried and driven by said shaft.

8. An electric cooker comprising an oven, a relatively-small angular electric heating element fitting small areas of the inner surfaces of the back and rim of the oven, and a rotary food carrying reel within the oven and spaced from the surfaces thereof and from said element.

9. An electric cooker comprising an oven having fixed terminal members, from the electric power circuit leads, and exposed within the oven, a relatively small electric heating member removably arranged within the oven and embodying an insulating block and a heating coil, the coil terminals being fixed to the block and arranged to removably telescope with and electrically contact said fixed terminal members, and a rotary food carrying disk within the oven.

10. An electric cooker comprising a sup-

port, an oven swingably carried by the support for adjustment vertically to various positions, an electric heating element in said oven, an electric motor carried by the oven and arranged at the exterior thereof, a rotary drive shaft driven by said motor and projecting forwardly into said oven, and a rotary food carrying disk within the oven and mounted on and rotated by said shaft.

11. An electric cooker comprising a stand, having upright posts and having trunnions whereby the oven is supported by posts and is vertically swingable to various posts, an electric heating element within the oven, a rotary food carrying disk within the oven, and means for rotating said disk, said means carried by the oven and embodying an electric motor arranged at the exterior of the oven.

12. An electric cooker comprising an oven having an open front and a closure whereby said front can be opened and closed, an electric heating element within the oven, and a rotary food carrying disk removably arranged within the oven and constructed and arranged to expose the food at the side of the disk, said disk being mounted on an axis centrally arranged within the oven.

13. An electric cooker comprising an oven having an internal electric heating element, a rotary drive shaft centrally projecting forwardly into the oven, and a food carrying disk having a central hub formed to slip onto and from the shaft and interlock therewith to cause the disk to rotate with the shaft.

14. An electric cooker comprising an oven having an internal electric heating element, a rotary drive shaft centrally arranged with respect to the oven, and a rotary food carrying disk removably arranged within the oven and operatively and removably coupled to said drive shaft and having a center hub and a front handle constructed and arranged between its hub and rim to carry food and expose the same within the oven.

15. An electric cooker comprising an oven having an internal electric heating element and a removable rotary food carrying disk having transversely arranged food carriers exposed at a side face of the disk.

16. An electric cooker comprising an oven having an internal electric heating element, and a rotary removable food carrying disk having a central hub and a circular series of food carriers constructed and arranged to expose food at a side face of the disk.

17. An electric cooker comprising an oven having an internal electric heating element and a removable rotary food carrying disk embodying a central hub and the spider-like formation constructed and arranged to carry food and expose the same at a side face of the disk.

18. An electric cooker comprising an oven having an internal electric heating element, and a removable rotary food carrying disk having a central hub and a circular series of transverse food carrying means accessible at a side face of the disk and concentrically arranged around the hub.

19. An electric cooker comprising an oven having an electric heating element, and a rotary removable food carrying disk.

Signed at Washington, D. C., this 3rd day of November, 1923.

LEO SIMMONS.