E. HEIDLER.

METHOD FOR SPONGING, SETTING, AND FINISHING FABRICS.

APPLICATION FILED AUG. 9, 1916.

1,270,153. Patented June 18, 1918.

4 SHEETS—SHEET 1.

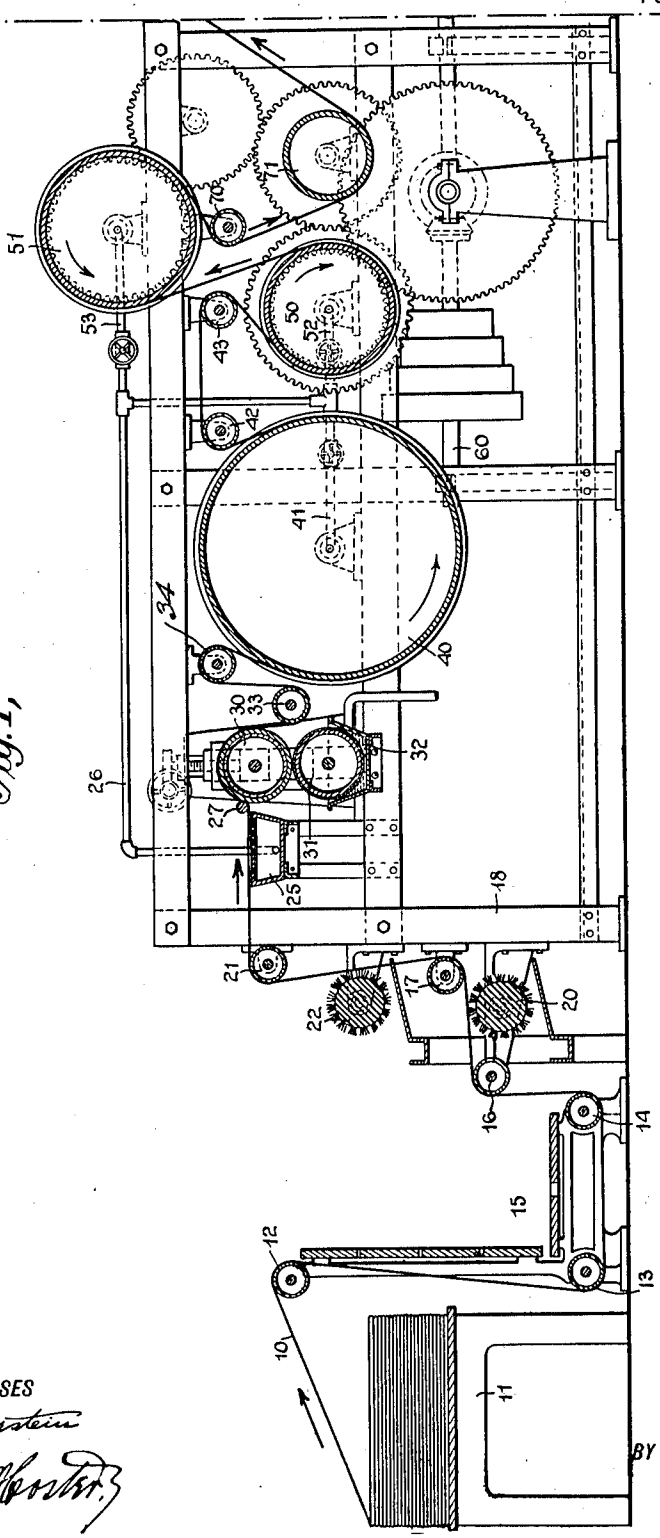

Fig. 1,

WITNESSES

L. Hauerstein

Rev. G. Horter

INVENTOR

Ernst Heidler

BY Munn & Co.

ATTORNEYS

E. HEIDLER.

METHOD FOR SPONGING, SETTING, AND FINISHING FABRICS.

APPLICATION FILED AUG. 9, 1916.

1,270,153. Patented June 18, 1918.

4 SHEETS—SHEET 2.

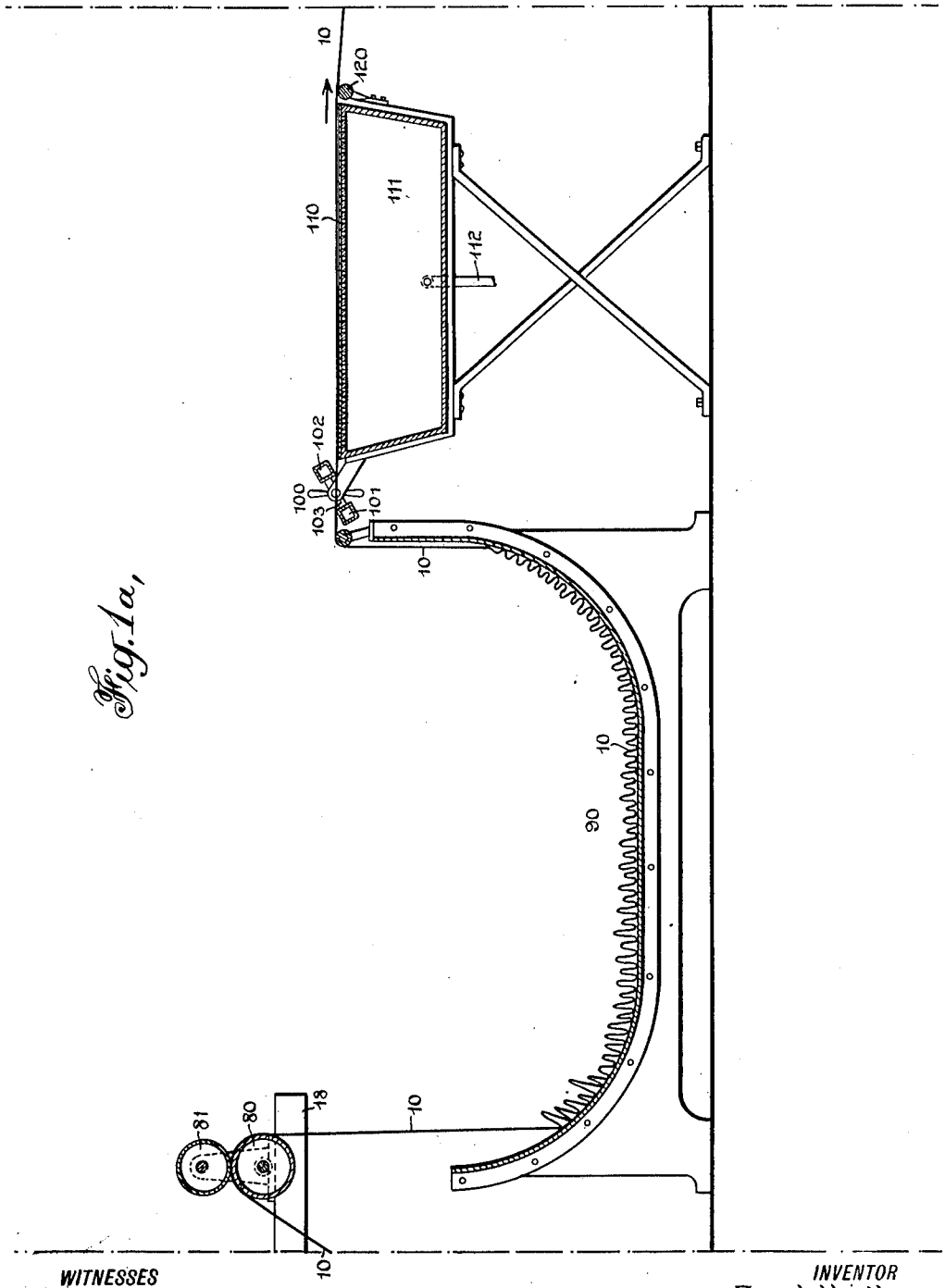

Fig. 1a,

WITNESSES

L. Hauerstein

Rud. J. Hoster

INVENTOR

Ernst Heidler

BY Munn & Co.

ATTORNEYS

E. HEIDLER.

METHOD FOR SPONGING, SETTING, AND FINISHING FABRICS.

APPLICATION FILED AUG. 9, 1916.

1,270,153. Patented June 18, 1918.

4 SHEETS—SHEET 3.

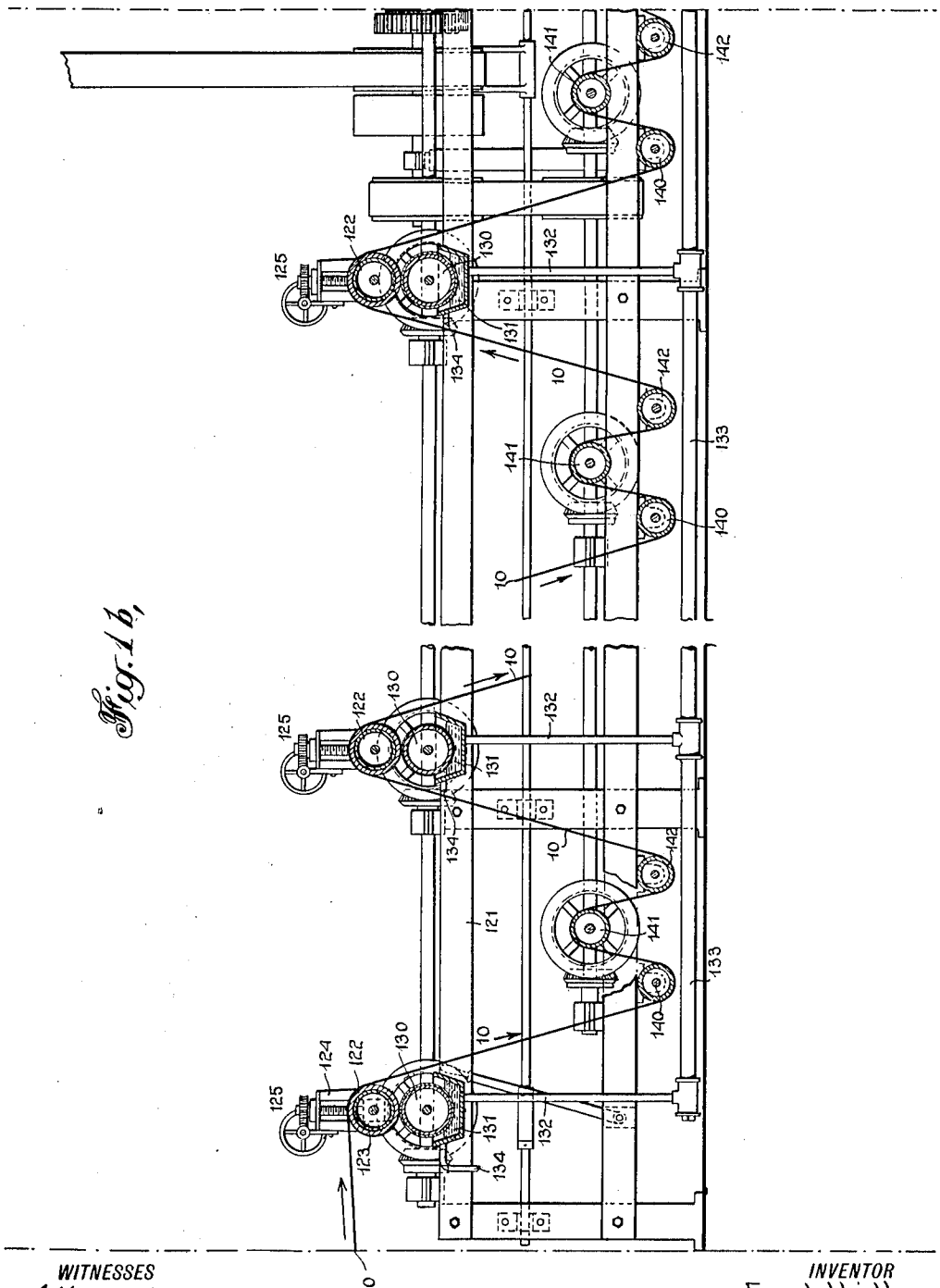

Fig. 1b,

WITNESSES

L. Hauerstein

Geo. G. Hoster

INVENTOR

Ernst Heidler

BY Munn & Co

ATTORNEYS

E. HEIDLER.

METHOD FOR SPONGING, SETTING, AND FINISHING FABRICS.

APPLICATION FILED AUG. 9, 1916.

1,270,153.

Patented June 18, 1918.

4 SHEETS—SHEET 4.

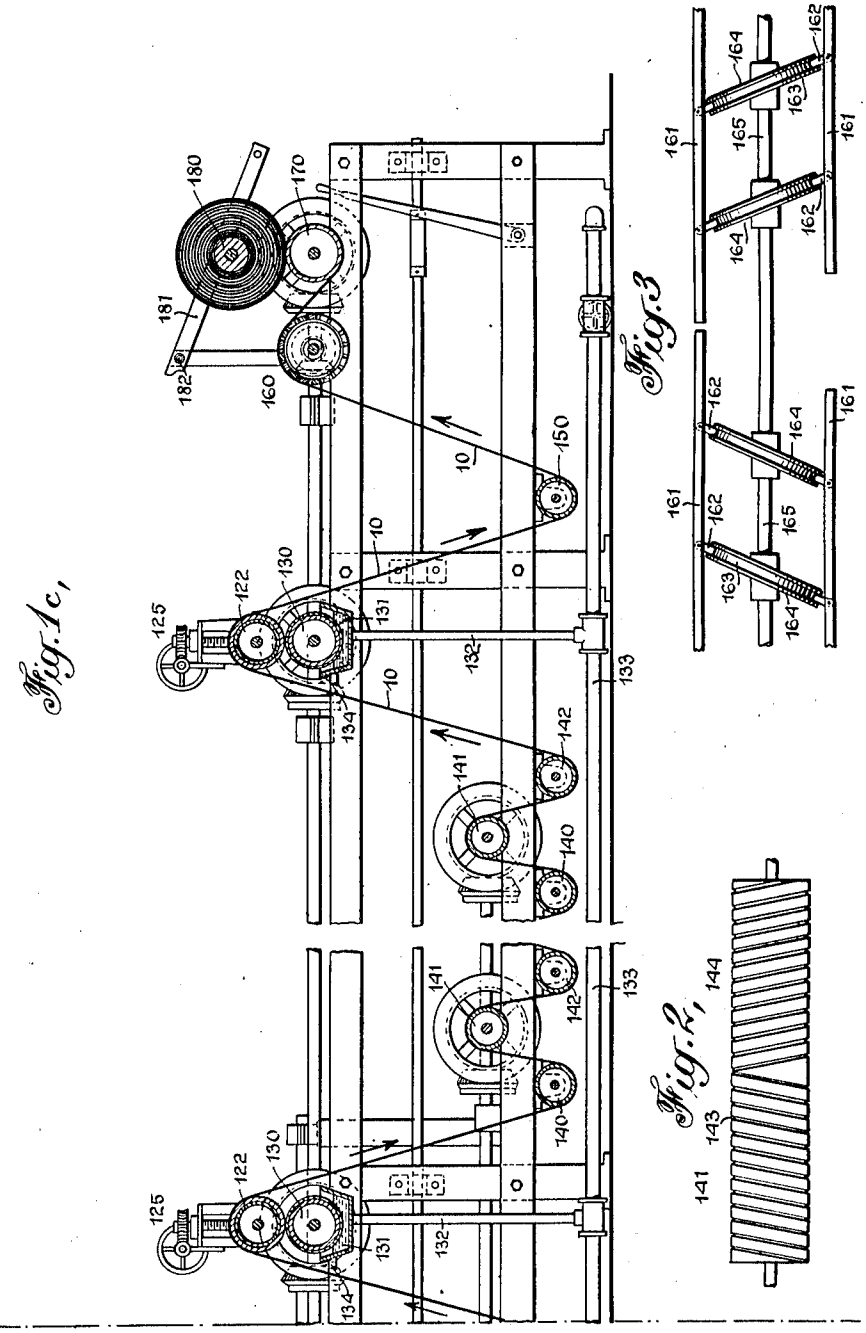

Fig. 1c,

Fig. 3

Fig. 2,

WITNESSES

L. Haverstein

Henry Horstkotz

INVENTOR

Ernst Heidler

BY Munn & Co.

ATTORNEYS

UNITED STATES PATENT OFFICE.

ERNST HEIDLER, OF GARFIELD, NEW JERSEY, ASSIGNOR TO COLUMBIA CONDITIONING COMPANY, INC., OF NEW YORK, N. Y., A CORPORATION OF NEW YORK.

METHOD FOR SPONGING, SETTING, AND FINISHING FABRICS.

1,270,153. Specification of Letters Patent. **Patented June 18, 1918.**

Application filed August 9, 1916. Serial No. 113,883.

To all whom it may concern:

Be it known that I, ERNST HEIDLER, a citizen of the United States, and a resident of Garfield, in the county of Berger and State of New Jersey, have invented a new and Improved Method for Sponging, Setting, and Finishing Fabrics, of which the following is a full, clear, and exact description.

The object of the invention is to provide a new and improved method for sponging, setting and finishing woolen and other fabrics in open width, and whereby the fabric is delivered in practically the same length as the original piece. Another object is to render the operation continuous thus avoiding handling of the goods during any stage of the process thereby increasing the output of a single apparatus by reducing the length of time required for the sponging, setting and finishing operations, at the same time dispensing with the employment of highly skilled labor.

The method consists essentially in sponging the fabric, fixing and setting the fibers thereof, ironing the piece of fabric and cooling and simultaneously moistening it, the several steps mentioned being carried out in the sequence stated and while the piece of fabric in open width is traveling in the direction of its length.

In order to carry this method into effect, use is made of an apparatus, such, for instance, as is illustrated in the accompanying drawings which form a part of this specification, in which similar characters of reference indicate corresponding parts in all the views.

Figure 1, Fig. 1ª, Fig. 1ᵇ, and Fig. 1ᶜ combined are a sectional side elevation of the apparatus;

Fig. 2 is a plan view of one of the rollers for preventing wrinkling of the fabric; and

Fig. 3 is a plan view of the spreading roller.

The woolen or other fabric 10 is sponged, set and finished in open width and while traveling in the direction of its length and longitudinally through the machine illustrated in the drawings. The fabric 10 to be treated is piled on a table 11 or other support, and is then passed around guide rollers 12, 13, and 14 mounted on a suitable stand 15 on which stands an attendant of the machine. The fabric 10 after leaving the guide roller 14 passes over guide rollers 16 and 17, spaced apart and mounted on the main frame 18 of the machine. The portion of the fabric extending between the guide rollers 16 and 17 is subjected at the under side to a brushing action by the use of a driven revoluble brush 20 employed for removing any loose fibers or other extraneous matter that may adhere to the under surface of the fabric 10. After leaving the guide roller 17 the fabric passes upward and over a guide roller 21 mounted on the main frame 18, and this upward portion of the fabric is engaged at its outer face by a driven revoluble brush 22 similar to the brush 20 and used for the same purpose but on the other side of the fabric 10.

The fabric 10 after leaving the guide roller 21 passes over the top of a steaming vessel 25 supplied with steam from a steam pipe 26 connected with a boiler or other suitable source of steam supply. The top of the vessel 25 is formed of a perforate plate overlaid with a fabric layer which takes up the steam and moistens and heats the layer, and the latter, in turn, uniformly heats and moistens the fabric 10. The fabric next passes under a guide rod 27 and onto and over the peripheral face of a moisture supply roller 30 journaled in vertically adjustable bearings arranged on the main frame 18. The peripheral face of this roller 30 is in contact with a roller 31 likewise journaled on the main frame 18 directly below the roller 30, and this roller 31 as well as the roller 30 are preferably covered with a suitable fabric material, and the roller 31 extends with its lower portion into water contained in a water tank 32 supplied with water from a suitable source. The roller 31 is driven and drives the roller 30 by peripheral contact with the same and in doing so the roller 31 delivers water, picked up from the tank 32, to the roller 30 which, in turn, sponges or moistens the fabric 10. As the latter is heated and somewhat moistened during its passage over the top of the steaming vessel 25, it is evident that the fabric is in proper condition to readily absorb a sufficient quantity of water from the roller 30 to thoroughly sponge the fabric 10.

The fabric after leaving the spraying or moistening roller 30 passes around guide

rollers 33 and 34 journaled on the main frame 18, and then the fabric passes around a driven and heated drum 40, preferably made of copper, and mounted to rotate on the main frame 18. One of the trunnions of the drum 40 is connected with a steam supply pipe 41, which may be a branch pipe of the pipe 26. The fibers of the moistened and heated fabric are fixed and set by contact with the heated drum 40 and the fabric after leaving the drum 40 passes over guide rollers 42, 43, around an ironing cylinder 50 driven in a direction opposite to the travel of the fabric 10 to iron and finish the fabric material on one side, the other side of which being ironed and finished by a second ironing cylinder 51 arranged above the cylinder 50 and receiving the fabric therefrom. The cylinder 51 is rotated in the direction opposite to the travel of the fabric and the cylinders 50 and 51 are positively driven and are connected by pipes 52 and 53 with a steam supply to heat the said cylinders and thus insure a proper ironing of the fabric on both sides thereof to give the fabric the desired finish and luster. As shown in Fig. 1, the cylinders 50 and 51 are driven from the main shaft 60 by suitable gearing but I do not limit myself to this driving means. The guide rollers 34 and 42 are located on opposite sides of the drum 40 near the top thereof and the drum 40 is made comparatively large to hold the fabric in contact with a large portion of the peripheral face of the drum to insure a thorough setting of the fibers.

The ironed fabric after leaving the cylinder 51 passes around a guide roller 70 and then under a drawing roller 71 driven in unison with the cylinders 50 and 51. The fabric 10 next passes between rollers 80 and 81 mounted on the top of the main frame 18, and of which the lower roller 80 is driven in unison with the roller 71. By the use of the driven roller 71 and the rollers 80 and 81 the fabric 10 is drawn forward at approximately the same peripheral speed of the drum 40 and against the resistance offered by the ironing rollers 50 and 51 rotating in a reverse direction so that the fabric is not liable to shrink or stretch during the ironing process.

The fabric after leaving the rollers 80 and 81 passes downward into an accumulating receptacle or basket 90 in which the fabric in a highly heated and practically moistureless state accumulates in folds to pass finally out of the other end of the receptacle and through a tension device 100, preferably in the form of two spaced bars 101, 102, mounted on arms 103 pivoted on the outside of the receptacle 90 and adapted to be fastened thereto after the bars have been set to the desired position to give the required tension to the fabric 10. The fabric next passes from the tension bar 101 over the top 110 of a steaming table 111 connected by a pipe 112 with a suitable source of steam supply. The top 110 is formed of a perforated plate, preferably of copper, and covered with a fabric material so that the fabric 10 is uniformly supplied with moisture and is heated to somewhat compensate for the loss of moisture incurred during the ironing and fiber-setting operations, and to prepare the fabric 10 for the next following cooling and moistening operation by the use of cold water.

The fabric 10 after leaving the steaming table 111 is subjected to a series of cooling and moisture replenishing operations to gradually cool the fabric and to replenish the same with moisture. For the purpose mentioned, the fabric passes over a bar 120 mounted on the steaming table 111 located adjacent another main frame 121 and then the fabric passes up over a covered roller 122 journaled in suitable bearings 123 mounted to slide up and down in guideways 124 attached to the main frame 121. A suitable raising and lowering device 125 is mounted on the guideway 124 and engages the bearings 123 to adjust the roller 122 up and down and move it with its bottom into more or less heavy contact with the peripheral face of a driven plain roller 130 extending with its lower portion into a tank 131 connected by a branch pipe 132 with a main water supply pipe 133. The tank 131 is provided with an overflow 134 to insure a constant supply of cold water in the tank 131. It will be noticed that the roller 122 is driven from the roller 130 and the latter carries water from the tank 131 to the peripheral face of the roller 122 so that the latter is kept cool and cools the fabric 10 as the latter passes over the roller 122 and at the same time moisture is supplied to the fabric.

The fabric 10 after leaving the roller 122 passes around a guide roller 140 and then up and over a driven roller 141 and then down and under a guide roller 142. This roller 141 (see Fig. 2) is provided with spiral grooves and ridges 143 and 144 extending in opposite directions from near the middle of the roller so that the fabric in passing over this roller 141 is prevented from wrinkling and any wrinkles that may be therein are straightened out in a transverse direction owing to the tendency of the grooves and ridges 143 and 144 to spread the fabric in opposite directions from the center outward toward the side edges.

The fabric after leaving the guide roller 142 passes over another cooling and moistening roller 122 and then around another spreading roller 141, and these two devices are repeated, at least, four times and all are mounted on the main frame 121 and driven in unison so that the fabric is gradually

cooled and supplied with the necessary amount of moisture and the fabric is spread to the full width without the slightest danger of producing wrinkles in the fabric or reducing the original width or length thereof. It is understood that the aggregate amount of moisture supplied to the fabric 10 by the several rollers 122 corresponds to the amount of moisture required in the finished fabric, that is, an amount of moisture that a dry fabric would absorb in ordinary dry atmospheric air.

The fabric 10 after leaving the last cooling and moistening roller 122 passes downward and around a guide roller 150 and then upward and over another spreading roller 160. This spreading roller 160 (see Fig. 3) is provided with sets of slats 161 on rings 162 engaging annular grooves 163 in the peripheral faces of disks 164 disposed obliquely on a shaft 165 journaled in suitable bearings on the main frame 121. By the arrangement described the slats 161 of the roller 160 move outwardly from the time the fabric passes onto the slats until the fabric leaves the slats, at the other side of the roller 160 so that the slats tend to spread the fabric from the middle outwardly in a transverse direction toward the edges of the fabric in a manner similar to the spreading action of the rollers 141. The fabric 10 after leaving the roller 160 passes around a driven drawing roller 170 and then the fabric is wound up on a winding-up roller 180 journaled loosely in a frame 181 fulcrumed at 182 to allow the frame 181 to swing upward on the increase of the roll of fabric 10 formed on the winding-up roller 180.

It will be noticed that suitable gearing, belts and pulleys, or other driving means, are employed for imparting rotary motion to the various revoluble members, but as such means are common expedients it is not deemed necessary to describe the same in this application especially as the same may be varied without deviating from the spirit of this invention.

The operation is as follows:

As the fabric is drawn through the machine the loose fibers and other extraneous matter are first removed from both faces of the fabric by the revoluble brushes 20 and 22, and then the fabric is heated on passing over the steaming vessel 25. The fabric is next sponged on its passage over the roller 30 deriving its moisture from the tank 32 in which revolves the roller 31 in peripheral contact with the roller 30. The fabric on next passing around the heated steam drum 40 has its fibers fixed and set and immediately thereafter both faces of the fabric are ironed by passing the fabric around the steam heated ironing rollers 50 and 51. It will be noticed that as these rollers 50 and 51 rotate in a direction opposite to the traveling fabric they uniformly iron the fabric throughout its width and by this action of the rollers most of the moisture in the fabric is dissipated but a fine finish and luster is given to both faces of the fabric.

It is understood that the fabric is held in a taut condition while passing around the several revolving members described and is drawn forwardly by the driven rollers 71 and 80 against which latter the fabric is pressed by the roller 81.

The fabric after leaving the driven roller 80 drops in folds into one end of the accumulating receptacle or basket 90 and the fabric is drawn out of the other end of the receptacle or basket 90 by the action of the cooling and moistening rollers 122 and the spreading rollers 141 subsequently encountered and mounted on the frame 121, and by the use of the tension device 100 the fabric is held in a taut condition while passing over the top 110 of the steaming table 111. By the use of the steaming table some of the deficiency in moisture of the dry and heated fabric is compensated for, and by setting the tension device 100 to increase or diminish the tension of the fabric it is evident that the latter can be somewhat stretched, if necessary, while passing over the steaming table 111 to compensate for any loss in the length of the fabric during the preceding operations, thus restoring the fabric to its original length. The fabric is next gradually cooled and moistened by passing over the rollers 122 and is prevented from wrinkling by its passage over the rollers 141. It will be noticed that only one side of the fabric is kept in contact with the rollers 122 as the moisture supplied by these rollers readily permeates the fibers by capillary attraction. As the cooling and moistening of the fabric proceeds gradually and the fabric passes alternately over the cooling rollers and the spreading rollers, the fabric is maintained at its proper width and it is finally wound up on the roll 180 with an exceedingly fine finish and luster and practically of the same length as at the beginning of the operations, and besides the fabric is permeated with the proper natural amount of moisture so that the fabric is ready for immediate use, that is, can be cut up into garments or other articles.

By interposing the receptacle or basket 90 between the ironing means and the steaming table 111 the preceding ironing, fiber setting and sponging operations can be carried on uninterruptedly while it is necessary that the following cooling, moistening, spreading, winding and removing operations are periodically interrupted to allow removing a finished roll of a predetermined length. It will also be noticed that the operations are carried out without unduly stretching or

shrinking the fabric 10 during its passage through the machine and while undergoing the various operations. It is understood that an undue stretching or an undue shrinking weakens the texture of the fabric. It will be noticed that the fabric during the cooling, moistening and spreading operations passes over driven rollers so that the fabric is not liable to be stretched and its texture injured and the fabric is also not liable to wrinkle.

By adjusting the sponging or moisture supply roller 30 relatively to the roller 31 more or less water is applied to the fabric according to the nature of the fabric under treatment at the time, it being understood that some fabrics require more sponging than others according to the thickness and nature of the weave and that of the material (woolen, worsted or cotton) of which the fabric is made. It is also understood that the cooling and moistening rollers 122 are vertically adjusted to supply the fabric with more or less moisture. Thus for thick fabrics more moisture is required than for thinner fabrics and the rollers 122 are moved upward when more moisture is required and are moved downward when less moisture is required. It is evident that the harder the roller 122 is moved into contact with the roller 130 the less water it takes up from the roller 130.

In order to keep the apparatus moving and to render the operations continuous throughout a whole working day or other period of time, a next piece of fabric to be treated is fastened by removable stitches to the rear end of the first fabric at the support 11 and these stitches are removed after the first fabric is finished and wound up on the roll 180. This procedure is followed with any number of pieces of fabrics to be treated in the working period of time.

A piece of fabric treated according to my process described is not liable to become spotted from rain or shrink after it is cut up and manufactured into garments or other articles.

Having thus described my invention, I claim as new and desire to secure by Letters Patent:

1. The herein described method of sponging, setting and finishing fabrics in open width, which consists in imparting a continuous traveling motion to the piece of fabric in the direction of the length thereof, and while in motion subjecting the fabric to the action of steam, moistening it with water, fixing and setting the fibers of the fabric, ironing the piece of fabric on both sides by passing it around cylinders rotating in the opposite direction of the travel of the piece of fabric, and finally cooling it and simultaneously supplying it with a natural amount of moisture.

2. The herein described method of sponging, setting and finishing fabrics in open width, which consists in imparting a traveling motion to a piece of fabric in the direction of the length thereof, sponging the fabric, fixing and setting the fibers of the sponged fabric, ironing the fabric, moistening and heating the fabric, subjecting the fabric to a series of cooling operations, and stretching the fabric after each cooling operation.

3. The herein described method of sponging, setting and finishing fabrics in open width, which consists in imparting motion, to the fabric in the direction of the length thereof, sponging the fabric, fixing and setting the fibers of the sponged fabric, ironing the fabric on both sides, moistening and heating the fabric and subjecting the fabric to alternate cooling and stretching devices.

4. The herein described method of sponging, setting and finishing fabrics in open width, which consists in imparting a traveling motion to the fabric in the direction of the length thereof, sponging the fabric, fixing and setting the fibers of the sponged fabric, ironing the fabric on both sides, subjecting the fabric to the action of steam to moisten and heat the same, subjecting the fabric to a series of cooling operations, and subjecting the fabric to the action of a stretching device after each cooling operation.

5. The herein described method of sponging, setting and finishing fabrics in open width, which consists in imparting a continuous traveling motion to the fabric in open width and in the direction of the length thereof, and subjecting the piece of goods to the following operations in the sequence stated, namely, brushing both faces of the fabric, heating it by subjecting it to the action of steam, moistening it with water, heating it while passing around a heated surface, and ironing it on both faces by heated cylinders running in the opposite direction of the travel of the fabric.

6. The herein described method of sponging, setting and finishing fabrics in open width which consists in imparting a continuous traveling motion to an unrolled piece of fabric in the direction of the length thereof, and subjecting the piece of goods to the following operations in the sequence stated, namely, brushing both faces of the fabric, heating it by subjecting it to the action of steam, sponging it with water, heating it while passing around a heated surface, ironing it on both faces by heated cylinders running in the opposite direction of the travel of the fabric, allowing the fabric to accumulate in folds, subjecting the fabric to tension, supplying steam to the fabric, cooling the fabric gradually and supplying it with a natural amount of moisture by passing it

over moistened rollers and spreading it in a transverse direction, and finally winding up the fabric in finished condition.

7. The herein described method of sponging, setting and finishing fabrics in open width, which consists in imparting motion to the fabric in the direction of the length thereof, brushing both faces of the fabric, subjecting the fabric to the action of steam to moisten and heat the same, moistening it with water, fixing and setting the fibers of the fabric, ironing both faces of the fabric, subjecting the fabric to the action of steam to moisten and heat the same, subjecting the fabric to a series of cooling and moistening operations, and stretching the fabric after each cooling and moistening operation.

8. In a method of sponging, setting and finishing a fabric in open width and while traveling in the direction of its length, the steps consisting in dry heating the fabric, gradually cooling and moistening the dry heated fabric by passing the fabric over a series of cooled and water supplying rotating rollers, and spreading the fabric from the middle outward toward the edges intermediate successive cooling and moisture supplying operations.

ERNST HEIDLER.