May 28, 1940. P. PASCALE 2,202,164

STEAM STOP VALVE

Filed Oct. 19, 1937

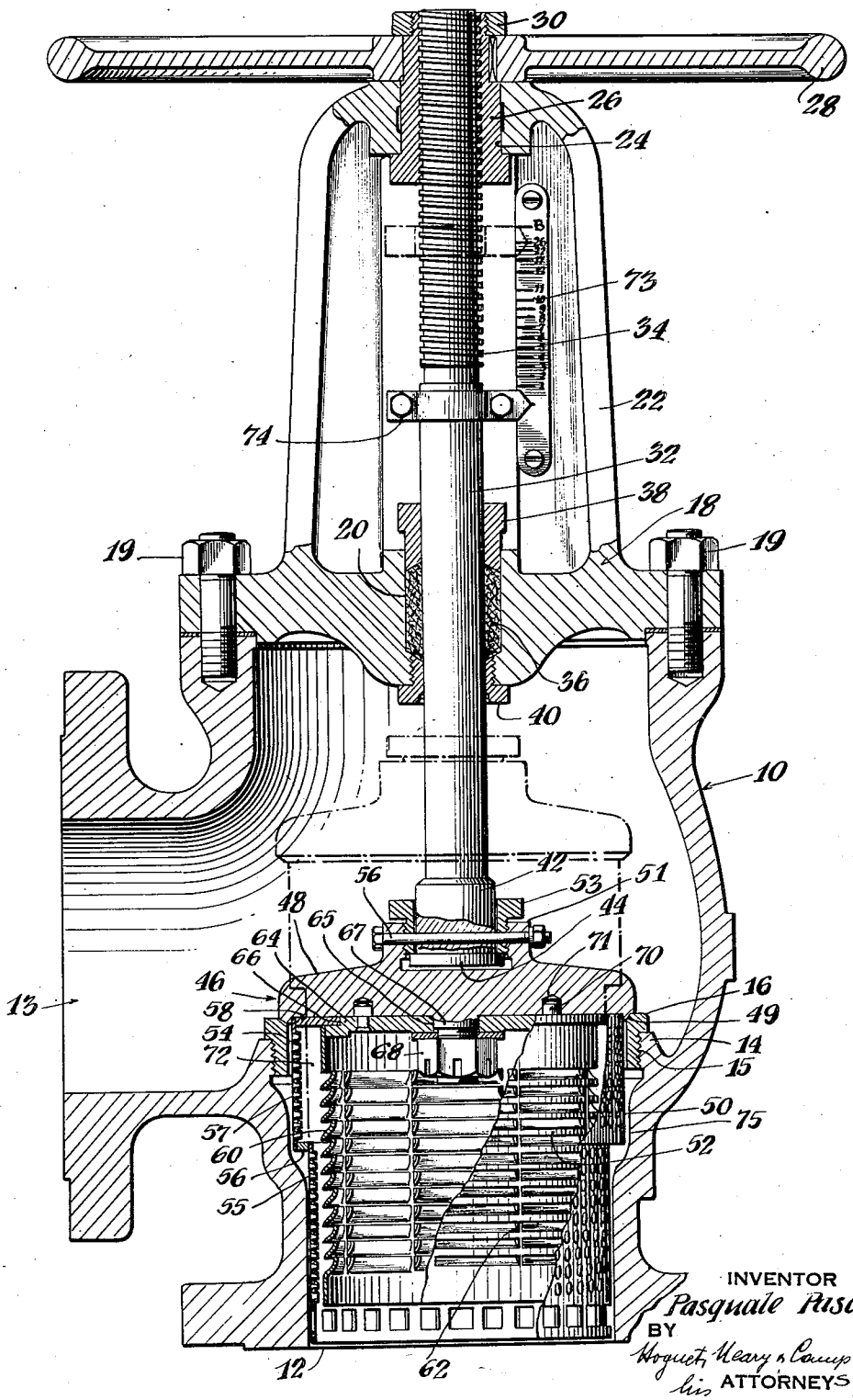

INVENTOR
Pasquale Pascale
BY
Hoguet, Neary & Campbell
his ATTORNEYS

Patented May 28, 1940

2,202,164

UNITED STATES PATENT OFFICE

2,202,164

STEAM STOP VALVE

Pasquale Pascale, New York, N. Y., assignor to Novo Patents, Inc., a corporation of Delaware

Application October 19, 1937, Serial No. 169,782

10 Claims. (Cl. 183—41)

This invention relates to steam stop valves, and more particularly to steam stop valves including structure for separating particles of entrained moisture and/or foreign matter from the steam as it passes through the valve body.

It is well known that steam generated in a boiler in contact with a body of water contains fine particles of water in the form of vapor or mist. In most of the industrial uses of steam, it is desirable that the saturated steam be "dry" rather than "wet," probably because the former contains more units of heat per volume for given conditions of pressure and temperature than the latter. It is, therefore, important to provide a moisture separator or drier at the boiler and/or in the steam main closely adjacent the point of use to remove this entrained moisture or condensate, as the case may be, so that saturated steam in the desired "dry" state may be had. Also, where steam is to be superheated, it is important that it be introduced into the superheater in a "dry" state rather than in a "wet" state, for the reason that the entrained moisture of the latter must first be converted into steam by the absorption of heat in the superheater before the steam, as a whole, can be superheated, thus lowering the degree of superheat to which the steam otherwise could be raised in its passage through the superheater.

Steam is also known to carry fine particles of foreign matter such as oil, grease, scale or other impurities introduced into the boiler by way of the boiler feed water. In many of the uses of steam, the presence of such foreign matter is even more objectionable than entrained moisture. It is, therefore, not only important to provide a structure for drying steam, but one which is also capable of removing foreign particles as well.

In some cases steam as it is delivered from the boiler to a steam line may be clean and substantially "dry," and yet the loss of heat from the steam in its passage through the steam line or manifolds leading therefrom may be sufficient to cause it to become "wet" again. Thus, if "dry steam" is to be had at the point of use, the condensate formed in the steam due to the loss of heat through the walls of the steam line and/or manifolds or due to local changes of pressure must be removed as the steam is delivered from the line or manifold, as the case may be.

Heretofore various steam drying constructions have been proposed or used in association with the usual stop valves used for controlling the flow of steam in or discharging from steam lines or manifolds, one type of such construction having been disclosed and claimed in my Patent No. 1,744,331, dated January 21, 1930. The present invention is an improvement upon the construction disclosed in my aforesaid patent, and has for an object a further improvement in drying efficiency, and particularly a structure for effectively separating and removing particles of entrained moisture and/or impurities irrespective of the open position of the valve.

In certain marine and industrial uses for which a steam valve of the separator or drier type is desired, space is often limited so that combined valve and drier structures of relatively large size or valves of normal length stems are undesirable. Another object of my invention, therefore, is to so construct a steam stop valve of the separator or drier type wherein the full open, effective separating position of the valve will provide an effective flow area through the separator or drier structure substantially equal to the flow area between the valve disc and seat for the same open position with the separator or drier structure removed.

Another object of my invention is to construct a valve incorporated with an improved structure for effectively and efficiently separating and removing particles of entrained moisture and/or impurities from steam or other gas which, for certain open positions of the valve will provide an effective flow area substantially equal to the flow area of the valve per se.

A further object of my invention is to construct a stop valve having a separating structure in the valve body, whereby particles of liquid and/or solids contained in suspension in steam or other gas entering the valve body will be effectively and efficiently removed therefrom.

A still further object of my invention is to construct a stop valve having a structure which causes the flow of steam or other gas with a minimum of resistance, to pass through a state of great turbulence, whereby moisture and foreign particles will be effectively and efficiently separated from the steam or other gas by means of centrifugal force and a severe scrubbing action.

Other objects and advantages of the invention will become apparent upon consideration of the following detailed description and the appended claims when read in conjunction with the accompanying drawing, in which:

The figure is a view in vertical section of a valve construction embodying the novel features of my invention.

Referring to the figure of the drawing, the

valve body 10 is provided with an inlet connection 12 and an outlet connection 13. Surrounding the inner end of the inlet connection 12 is an annular flange 14 threaded at 15 to receive a threaded ring seat 16. Opposite the inlet connection to the valve body is a valve head 18 secured to the valve body by appropriate bolts 19. The valve head is provided with a central opening 20 and an upright yoke 22 having a top opening 24 in alignment with the opening 20. Mounted in the top opening 24 is a threaded stem nut 26 to which a hand wheel 28 is held in keyed position by the lock nut 30. A valve stem or spindle 32, having one end thereof threaded, as shown at 34, operatively engages the threaded stem nut 26 and extends through the opening 20 into the valve body 10. The valve stem 32 is surrounded by packing material 36 which is retained in the opening 20 by means of the gland 38 and the bushing 40.

The inner end of the valve stem 32 is provided with an enlarged head portion 42 having an end flange 44. Secured to the head portion of the valve stem is a combined valve and drier structure 46 which consists of a valve disc 48 and a pair of nested hollow cylinders or tubular members 50 and 52. The valve disc 48 is rigidly secured to the head portion of the valve stem by means of a collar 53 which threadably engages an upright annular flange 51 on the upper side of the valve disc and abuts the end flange 44. A lock bolt 55 is passed through holes in the disc flange 54, the collar 53 and the stem head 42 to insure retention of the combined structure 46 on the stem 32. The valve disc 48 is provided with a beveled edge 49 for coactive engagement with a corresponding beveled surface on the ring seat 16.

In the movable combined valve and drier structure 46 the pair of nested tubular members 50 and 52 are secured to the inlet side of the valve disc 48. The outer tubular member 50 is made up of two tubular stampings 54 and 55 secured together and offset by means of an annular ring 56 to which the stampings are welded or otherwise secured. These tubular stampings are formed with rows of nozzle-like openings 57 having restricted inlet end portions protruding from the inner surface of the tubular member. The passages of the nozzle-like openings 57 flare from the inlet to the outlet side of the stamping. At the upper end of the outer tubular member an annular attachment flange 58 is welded to the inner side thereof. The inner tubular member, which may also be formed by stamping, is provided with a plurality of curved, vertically spaced, horizontal vanes or blades 60 forming downwardly curved passages therebetween. Interconnecting the vanes 60 at spaced horizontal distances are vertical webs 62. The upper portion of the inner tubular member 52 has welded thereto an annular plate 64 offset at its outer edges at 66 to accommodate the annular attachment flange 58 of the outer tubular member. The plate 64 is provided with a central opening 65 for receiving a threaded lug 67 whereby the plate 64 is clamped to the inlet side of the disc 48 by means of the lock nut 68. To prevent the plate 64 from moving relative to the disc, the plate 64 is provided with dowel pins 70 which project into corresponding recesses 71 on the inlet side of the disc 48. The offset portion of the plate 64 operates in turn to clamp the annular flange 58 of the outer tubular member to the valve disc 48 in spaced relation with the inner tubular member 52.

The annular chamber 72, formed by the space between the two tubular members 50 and 52, is exceedingly narrow throughout the lower portion thereof and somewhat widened above the offset provided by the ring 56. While the lower narrow portion tends to restrict the flow of steam by forcing it into intimate scrubbing and combing relation with the protruded ends of the nozzles 57, it also functions to provide a drain for the liquid or other separate removed from the steam by the combined centrifugal force and scrubbing action which the steam is subjected to in its sharp reversal of flow to the upper exposed or partially exposed nozzles. The liquid or other separate removed from the steam drains downwardly on the surface between the nozzle inlets on the outer tubular member to the wall of the inlet connection where it may be returned to the boiler or removed from the steam main or manifold through an appropriate steam trap.

To obtain full open, effective separating position of the valve without moving the valve disc a distance equal to the length of the tubular structure, the inlet passage 12 of the valve body and the outer tubular member 50 have been given particular cooperative shapes. The inlet passage 12 is enlarged at 75 below the valve seat 49. The upper tubular element 54 of the outer member 50 fits into the enlarged portion of the inlet passage when the valve is closed, the lower tubular element 55 being offset inwardly and adapted to fit closely adjacent the lower narrower portion of the inlet passage. During the initial opening of the valve throughout a distance equal to the length of the upper tubular element 54, the effective flow area of the valve is directly in proportion to the number of rows of nozzles in the tubular element 54 exposed above the valve seat 49. As the offset portion or tubular element 55 is raised above the valve seat, the widening space between the ring 56 and valve seat 49 adds rapidly to the effective flow area of the valve. The movement of the offset portion or ring 56 above the valve seat provides a discharge outlet for the several rows of nozzles in the lower tubular element while the major portion of the lower tubular element is still within the enlarged portion of the inlet passage. This discharge outlet for the nozzles in the lower tubular element is illustrated by the broken lines which indicate the full, open, effective separating position of the valve. Consequently, the valve disc 48 may be opened to the extent of the usual stop valve and thereby provide an effective nozzle flow area of an amount substantially equal to the flow area provided between the valve disc 48 and seat 49 with the tubular drier structure removed. It will therefore be readily apparent that the above described embodiment of my invention provides a drier structure in a valve which will furnish substantially the same effective flow area for certain open positions of the valve as a like stop valve without the presence of a drier structure.

In order that the operator may ascertain the effective opening of the valve, an indicator comprising a graduated scale plate 73, attached to one member of the yoke 22, and a pointer 74, secured to the valve stem 32, are provided. The scale is graduated in units which represent the degree of opening in proportion to the number of rows of nozzles exposed for effective passage of steam therethrough. In the specific embodiment illustrated, there are eleven rows of nozzles

in the upper tubular element 54. Therefore, the graduated units of the scale are equally spaced from "1" to "11" to represent accurately the number of rows of nozzles exposed for passage of steam. As the valve structure is raised so that the annular offset portion or ring 56 is moved above the valve seat 49, the effective flow area of the valve increases more rapidly than in proportion to the number of rows of nozzles in the lower tubular element 55 raised above the valve seat because the annular opening that is formed between the offset portion or ring 56 and the valve seat 49, establishes direct communication with the enlarged portion of the passage 12, thus enabling the nozzles in the lower tubular element to become immediately effective. The distance on the scale between the units above "11", therefore, is not of the same proportion as between the units therebelow, the units above "11" representing the additional effective flow area of the valve in proportion to the effective flow in rows of nozzles on the lower tubular element, as determined with reference to the dimensions and other factors particular to the given valve structure.

Occasionally it is desirable to pass a greater amount of steam through the superheater or other equipment for cleaning or "blow-out" purposes than is necessary for normal requirements. The dimensions of my valve therefore are such that an additional open movement beyond the full, open, effective separating position may be had, whereby a by-pass at the end of the tubular member may be established. This by-pass position of the valve is indicated on the graduated scale plate as "B." During normal operation of the valve, however, when effective drying of the steam is required, the valve is never opened beyond the full, open, effective separating position indicated on the scale as "26."

In operation, the combined valve and drier structure 46 is unseated by turning the hand wheel 28, thereby providing communication between the inlet and outlet connections of the valve body. Steam passing through the valve body is first intercepted by the curved vanes 60 of the inner tubular member and deflected sharply downward into the narrow annular chamber 72 against the protruded inlet portions of the nozzles 57. The streams of steam flowing between the vanes 60 are broken up by reason of the scrubbing and combing action of the nozzles 57 and caused to swirl sharply upward in a state of great turbulence before finally passing through the nozzles 57 to the outlet side of the valve body. The sharp reversal through which the steam must pass in order to escape through the more or less exposed nozzles in the outer tubular member together with the combing and scrubbing engagement the steam undergoes on impinging the protruded portions of the nozzles, cause the particles of moisture and foreign matter to be effectively separated and removed from the steam.

While the stop valve incorporating the separator structure herein shown and described is particularly adapted for use in steam mains and manifolds, it is recognized that my invention may be used in systems for controlling the flow of other gaseous fluids where it is desirable to separate condensate or other entrained liquids therefrom. Moreover, it is to be understood that the cooperative shapes of the inlet passage and the outer tubular drying member may be varied considerably without departing from the spirit of my invention, and that my invention is not to be restricted except insofar as is necessitated by the prior art and the scope of the appended claims.

I claim:

1. In a steam stop valve comprising a hollow body having an inlet connection, a valve seat at one end of said connection, a valve member movable into and out of engagement with said seat, and a drier structure supported by said valve member and extending within said inlet connection; said drier structure including a tubular perforated member having a portion thereof remote from the point of support inwardly offset in respect to a portion adjacent said point of support, said offset portion cooperating with the walls of said inlet connection to provide a discharge space therebetween in certain open positions of said valve.

2. In a steam stop valve comprising a hollow body having an inlet connection, a valve seat at one end of said connection, a valve member movable into and out of engagement with said seat, and a drier structure supported by said valve member and extending within said inlet connection; said drier structure including a plurality of cylindrically arranged tubular elements, the outer of said elements being provided with a multitude of inwardly protruding nozzles having restricted openings for combing steam passing therethrough, said tubular element being inwardly offset in a portion thereof removed from the point of support by said valve member, and a second tubular element positioned within and extending through said outer element to a position adjacent the outer end of said inwardly offset portion and cooperating with said outer element to form a chamber therebetween substantially closed at its lower end and enlarged at its upper portion, said inner tubular member being provided with inclined openings for directing steam passing outwardly therethrough obliquely across the inner surface of said outer tubular member, and said offset portion of said outer tubular member cooperating with the walls of said inlet connection to provide a discharge space therebetween in certain positions of said valve.

3. In a steam stop valve, a hollow body having a vertical inlet connection provided with an enlarged inner portion, a valve seat adjacent said inner portion, a valve movable into and out of engagement with said seat, and a drier structure associated with said valve and including a tubular perforated member having an inwardly offset portion adapted to extend into said inlet connection beyond said enlarged inner portion when the valve is in closed position and cooperating with the enlarged inner portion of said inlet connection to provide a discharge space therebetween in certain open positions of said valve.

4. In a steam stop valve comprising a body having inlet and outlet passages, a valve seat, the inner portion of said inlet passage being enlarged and terminating adjacent said valve seat, a combined valve and drier structure movable relative to said seat including a perforated member extending through said seat into said inlet passage, and means for directing the flow of gaseous fluid against the perforated surface of said member when the valve is open, said member being so shaped with respect to the contour of said inlet passage that upon opening movement of said valve structure an appreciable space is provided between said member and the surface of said enlarged inlet portion through which gaseous fluid passing through the perforations of said member in proximity to said enlarged inlet portion may flow.

5. In a steam stop valve comprising a body having inlet and outlet passages, a valve seat, the inner portion of said inlet passage being enlarged and terminating adjacent said valve seat, and a combined valve and drier structure movable relative to said seat including a perforated tubular member extending into said inlet passage, said tubular member having a portion thereof offset so that when the valve is opened beyond a predetermined amount, the offset portion will provide a discharge space between said enlarged inlet portion and said tubular member so that the perforations in the portion of the member adjacent said enlarged inlet portion provide part of the effective flow area of said combined structure.

6. In a steam stop valve comprising a body having inlet and outlet passages, a valve seat, the inner portion of said inlet passage being enlarged and terminating adjacent said valve seat, and a combined valve and drier structure movable relative to said seat comprising a valve disc and a perforated tubular member extending from a face of said disc into said inlet passage, said tubular member having a portion thereof offset to provide a discharge space between said enlarged inlet portion and said offset portion when said valve is opened beyond a predetermined amount, the effective flow area of the perforations in said tubular member being substantially equal to the flow area between said disc and valve seat when the valve is in full, open, effective separating position.

7. In a combined stop valve and drier structure comprising a body having inlet and outlet connections, a valve seat, a valve member and a drier structure secured to the inlet side of said valve member for extension into said inlet connection; said inlet connection and said drier structure being characterized by the fact that a portion of said inlet connection adjacent said valve seat is radially spaced relative to at least a portion of the outer surface of said drier structure to provide a drier discharge space between said inlet portion and said drier structure for at least certain open positions of said valve.

8. In the combined stop valve and drier structure defined in claim 7 wherein the inlet portion and drier structure are further characterized by the fact that said inlet portion is enlarged to approximately the size of said valve seat, and said drier structure includes a portion adapted to extend into and fit closely within the inlet connection beyond the enlarged portion thereof.

9. In a combined stop valve and drier structure comprising a body having inlet and outlet connections, a valve seat, a valve member and a drier structure secured to the inlet side of said valve member for extension into said inlet connection; said drier structure being characterized by the fact that at least a portion of the outer surface of said drier structure is substantially spaced radially with respect to a portion of said inlet connection to provide a drier discharge space between said inlet portion and said drier portion for at least certain open positions of said valve.

10. In a combined stop valve and drier structure comprising a body having inlet and outlet connections, a valve seat, a valve member and a drier structure secured to the inlet side of said valve member for extension into said inlet connection; said inlet connection and said drier structure being characterized by the fact that a portion of said inlet connection adjacent said valve seat is enlarged to approximately the size of said valve seat and said drier structure includes an outer tubular perforated member having an inwardly offset portion adapted to extend beyond said enlarged portion when the valve is closed.

PASQUALE PASCALE.