(19) Europäisches Patentamt
European Patent Office
Office européen des brevets

(11) EP 0 692 749 B1

(12) **EUROPEAN PATENT SPECIFICATION**

(45) Date of publication and mention of the grant of the patent:
09.10.2002 Bulletin 2002/41

(51) Int Cl.[7]: **G03G 15/16**, G03G 15/20, G03G 15/00

(21) Application number: **95110820.8**

(22) Date of filing: **11.07.1995**

(54) **Electrophotographic printing apparatus**

Elektrophotographisches Druckgerät

Appareil à imprimante électrophotographique

(84) Designated Contracting States:
DE FR GB

(30) Priority: **13.07.1994 JP 16091394**

(43) Date of publication of application:
17.01.1996 Bulletin 1996/03

(73) Proprietor: **Hitachi, Ltd.**
Chiyoda-ku, Tokyo 101 (JP)

(72) Inventors:
- **Mochizuki, Akira**
  Mito-shi (JP)
- **Sato, Goro**
  Niihari-gun, Ibaraki-ken (JP)
- **Matsuno, Junichi**
  Tsuchiura-shi (JP)
- **Hiraoka, Chikara**
  Niihari-gun, Ibaraki-ken (JP)
- **Nakano, Masaru**
  Tsukuba-shi (JP)
- **Terayama, Takao**
  Ushiku-shi (JP)
- **Murakoshi, Minoru**
  Nagoya-shi (JP)
- **Numata, Shigeki**
  Kasugai-shi (JP)

(74) Representative: **Beetz & Partner Patentanwälte**
Steinsdorfstrasse 10
80538 München (DE)

(56) References cited:
EP-A- 0 372 479 **EP-A- 0 426 072**
DE-A- 4 213 236

- **PATENT ABSTRACTS OF JAPAN vol. 017, no. 390 (P-1577), 21 July 1993 & JP-A-05 066686 (RICOH CO LTD), 19 March 1993,**
- **PATENT ABSTRACTS OF JAPAN vol. 017, no. 255 (P-1539), 20 May 1993 & JP-A-04 372972 (HITACHI LTD), 25 December 1992,**

Note: Within nine months from the publication of the mention of the grant of the European patent, any person may give notice to the European Patent Office of opposition to the European patent granted. Notice of opposition shall be filed in a written reasoned statement. It shall not be deemed to have been filed until the opposition fee has been paid. (Art. 99(1) European Patent Convention).

EP 0 692 749 B1

Printed by Jouve, 75001 PARIS (FR)

Description

[0001] The present invention relates to an electrophotographic copying apparatus according to the preamble of claims 1 and 15. Such an apparatus is known from DE 42 13 236. More particularly, the invention relates to a copying apparatus and a laser printer which can print a booklet.

[0002] In a copying apparatus, a laser printer or the like, conventionally, images to be printed are formed by Carlson's electrophotographic recording method, as disclosed in publications such as USP No. 2,297,691 and "Fundamentals and Application of Electrophotographic Technology" edited by the Electrophotography Society (published by CORONA PUBLISHING CO., LTD., on June 15, 1988: P. 47).

[0003] As one example of this method, a conventional structure for an image formation process is shown in a conceptual diagram of Fig. 12.

[0004] In this method, an image on an original document is read by optical means, and the read image is formed into an electrostatic latent image on the surface of a photosensitive drum 56 by an exposure device 52, which drum 56 has been charged through corona discharge by a corona discharger 53. The electrostatic latent image is formed on the photosensitive drum 56 with, for example, a positive charge. Subsequently, the electrostatic latent image with the positive charge is supplied with a toner with a negative charge from a developing device 51, and developed as a toner image.

[0005] The toner image on the photosensitive drum 56 is transferred to a recording sheet 57 in contact with the photosensitive drum 56. By a transfer device 50, a positive charge which has a polarity opposite to the charge polarity of the toner 60a is applied to the recording sheet 57 from its rear side, so that the toner image is transferred to the recording sheet by static electricity. The transferred toner image is applied with heat and pressure by a fixing device which comprises a heating roller 58 and a pressing roller 59, and fused and fixed on the recording sheet 57 in the form of an image 60b.

[0006] Since the photosensitive drum 56 is rotated and repeatedly used, a charge reducer 55 and a cleaning device 54 are provided for removing the remaining toner after transfer from the photosensitive drum 56.

[0007] In this method, as obviously understood from the above-described image formation process, the recording sheet is held between the photosensitive drum and the transfer device. In order to provide an electrostatic force, by which a carrier with a charge or a toner with a charge on the photosensitive drum is attracted to the recording sheet, the transfer device applies a charge of a polarity opposite to that of the photosensitive drum, to the recording sheet from the rear side of its toner transfer surface. Therefore, in the case of a recording sheet having a large thickness or a recording medium of a large thickness such as a booklet, the surface potential is not increased even if the recording sheet or booklet is applied with a charge from the rear side, so that a sufficient electrostatic force can not be provided. In consequence, thick sheets, booklets or the like can not be printed by the foregoing method.

[0008] DE 42 13 236 A1, Fig. 9, discloses an electrophotographic copying device with a band-like toner image carrier. A toner image is formed on a photosensitive drum, transferred from there to an endless belt and from there to a recording medium. The recording medium passes between the endless belt and a pressing roller, which is movable toward and away from the endless belt, to allow printing onto booklets. JP-A- 4-372 972 describes another booklet printer wherein the transfer pressing roller is movable toward and away from the intermediate image carrier.

[0009] It is the object of the present invention to provide an electrophotographic printing apparatus which enables printing information to be recorded on a recording medium of a large thickness such as a booklet.

[0010] This object is accomplished in accordance with the independent claims. Dependent claims are directed on preferred embodiments of the invention.

[0011] There is provided an electrophotographic copying apparatus comprising transfer means for carrying a toner image corresponding to printing information, and fixing means for transferring and fixing the toner image on the transfer means onto a recording medium, wherein a recording medium having a thickness which may vary can be recorded.

[0012] An electrophotographic copying apparatus comprises transfer means for carrying a toner image corresponding to printing information, and fixing means for transferring and fixing the toner image on the transfer means onto a recording medium, wherein the recording medium is a booklet, and the fixing means is movable in accordance with a change of thickness of the booklet which is fed in such a manner that a stitched portion of the booklet extends perpendicular to a feeding direction.

[0013] According to the invention, there is provided an electrophotographic copying apparatus comprising transfer means for carrying a toner image corresponding to printing information, and fixing means for transferring and fixing the toner image on the transfer means onto a recording medium, wherein the transfer means is movable to come toward and away from a printing surface of the recording medium.

[0014] The fixing means may include a heat-generating element which constitutes a part of the fixing means and can come toward and away from the booklet.

[0015] A force for pressing the heat-generating element against the recording medium may be changed.

[0016] Still according to the invention, there is provided an electrophotographic copying apparatus including a photosensitive drum for forming a toner image corresponding to printing information, charger means for charging the photosensitive drum, exposure means for forming an electrostatic latent image corresponding to the printing information on the photosensitive drum, de-

veloping means for forming the toner image by attaching a toner to the electrostatic latent image, transfer means for transferring the toner image to a transfer body, fixing means for transferring and fixing the toner image on the transfer body onto a recording medium, feed rollers for delivering the recording medium, and control means for controlling operations of the photosensitive drum, the charger means, the exposure means, the developing means, the transfer means, the fixing means and the feed rollers on the basis of the printing information, information of the recording medium and information from a means for detecting a position of the recording medium, wherein the fixing means is provided movably toward a printing surface of the recording medium, and moves in response to a signal from the control means.

Fig. 1 is a side view for explaining a mechanism unit of an electrophotographic copying apparatus according to one embodiment;
Fig. 2 is a side view for explaining the operation of the electrophotographic copying apparatus shown in Fig. 1;
Fig. 3 is a side view for explaining the operation of the electrophotographic copying apparatus shown in Fig. 1;
Fig. 4 is a side view for explaining the operation of the electrophotographic copying apparatus shown in Fig. 1;
Fig. 5 is a side view for explaining the operation of the electrophotographic copying apparatus shown in Fig. 1;
Fig. 6 is a side view for explaining the operation of the electrophotographic copying apparatus shown in Fig. 1;
Fig. 7 is a perspective view showing one example of a booklet used for the described electrophotographic copying apparatus;
Fig. 8 is a side view showing the example of the booklet used for the electrophotographic copying apparatus;
Fig. 9 is a perspective view showing the example of the booklet used for the electrophotographic copying apparatus;
Fig. 10 is a diagram for explaining the transfer process and the structure of a transfer-fixing film;
Fig. 11 is a diagram for explaining the transfer process and the structure of a transfer-fixing film;
Fig. 12 is a structural diagram for explaining a conventional image formation process;
Fig. 13 is a perspective view showing a PTC heat-generating chip;
Fig. 14 is a schematic diagram for explaining the wiring of the PTC heat-generating chip;
Fig. 15 is a diagram showing the structure of a heat-generating element;
Fig. 16 is a side view for explaining a mechanism unit of an electrophotographic copying apparatus according to one embodiment;
Fig. 17 is a side view for explaining the operation of the electrophotographic copying apparatus shown in Fig. 16;
Fig. 18 is a side view for explaining the operation of the electrophotographic copying apparatus shown in Fig. 16;
Fig. 19 is a side view for explaining the operation of the electrophotographic copying apparatus shown in Fig. 16;
Fig. 20 is a side view for explaining the operation of the electrophotographic copying apparatus shown in Fig. 16;
Fig. 21 is a side view for explaining the operation of the electrophotographic copying apparatus shown in Fig. 16;
Fig. 22 is a diagram showing the structure of a booklet printer according to one embodiment;
Fig. 23 is a diagram for explaining a control magnitude of a pressing force; and
Fig. 24 is a perspective view showing one example of a booklet on which format printing is effected.

[0017] One embodiment will be hereinafter described.

[0018] Fig. 1 is a diagram showing the structure of a printing mechanism unit of an electrophotographic copying apparatus according to the invention. A feeding passage for delivering a booklet 21 is defined by a paper pan 12 which is first guide means, and by paper guides 11 and 19 which are second guide means located opposite to and at a distance from the first guide means. The distance between the first and second guide means is determined to be larger than the maximum thickness of the booklet or the like to be fed. The feeding passage is provided with feeding means which comprises drive feed rollers 10, 20 and driven feed rollers 9, 18 adapted to contact with the drive rollers. The driven rollers 9, 18 are supported by elastic members 8, 17, which are supported by drive sources 7, 16, respectively, to thereby control forces of the driven rollers 9, 18 for pressing the booklet 21. If the thickness of the booklet 21 to be fed is small or the feeding resistance is low, feeding can be performed without moving the driven rollers 9, 18 vertically, so that the drive sources 7, 16 may be dispensed with.

[0019] In order to increase the feeding forces, drive rollers may be used in place of the driven rollers 9, 18. Sensors 13, 15 are provided for detecting entrance of the booklet 21 into the printing unit and for positioning the booklet 21.

[0020] A heat-generating element 6 comprises PTC (Positive Temperature Coefficient) thermistors, and is supported by a drive source 4 and an elastic member 5. A back-up roller 14 is opposed to the heat-generating element 6 through the paper pan 12. The surface of the heat-generating element 6 which contacts with the booklet is rounded on before and after sides in the booklet feeding direction so that the heat-generating element 6 can easily follow portions of the booklet which are var-

ied in thickness.

[0021] In place of the PTC thermistors, a thick film heater may be employed. Although the PTC thermistors do not require temperature control, a temperature control circuit and a temperature sensor need be provided for the thick film heater.

[0022] Preferably, springs are used as the elastic members 8, 17 and 5, and compression springs are especially suitable.

[0023] As the drive sources 4, 7 and 16, solenoids are employed.

[0024] A transfer-fixing film 27 serves as transfer means, to which a toner is transferred from a photosensitive drum. The transfer-fixing film 27, formed as an endless belt, is trained round rollers 1, 2 and 3 for rotation. In this embodiment, the roller 2 serves as a drive roller. However, any of the rollers 1, 2 and 3 may serve as a drive roller. The transfer-fixing film 27 in the form of the endless belt is made of a material which does not stretch in the longitudinal direction and is sufficiently thin to bend easily. Consequently, that portion of the transfer-fixing film 27 which contacts with the booklet 21 can be made flat by the heat-generating element 6, thus effecting transfer and fixing to the booklet reliably. Moreover, by forming the film as the endless belt, the heat-generating element which contacts with a recording medium through the film is not restricted in shape.

[0025] A charger 23, an exposure device 24 and a developing device 25 are provided close to the photosensitive drum 22, so that the toner 26 is transferred from the developing device 25 to the photosensitive drum 22 by electrostatic force, thereby forming a toner image. Toner removal means 28b, 28a for removing the residual toner are provided for the photosensitive drum 22 and the transfer-fixing film 27, respectively. The toner removal means 28b provided for the transfer-fixing film 27 is designed not to separate from the transfer-fixing film 27 when the roller 1 is moved.

[0026] A distance L0 between the feed rollers 10 and 20 is determined to be at least shorter than a length of the booklet 21 in a closed condition along the feeding direction. Thus, the cover of the booklet can also be printed.

[0027] In this embodiment, the booklet is fed in a direction perpendicular to a stitched portion of the booklet. When the booklet is to be fed in a direction parallel to the stitched portion of the booklet, the distance L0 is determined to be shorter than a length of the booklet along the lengthwise direction of the stitched portion.

[0028] The operation will be described with reference to Figs. 2 to 6.

[0029] When the booklet 21 is delivered on the paper pan 12 in a direction A by the feed rollers 18, 20, the sensor 15 detects the booklet 21.

[0030] The booklet 21 is further delivered until it is stopped at a predetermined position in a transfer-fixing area between the heat-generating element 6 with the transfer-fixing film 27, and the back-up roller 14. The photosensitive drum 22 receives a driving force from the roller 2, with which the photosensitive drum 22 contacts through the transfer-fixing film 27, and the photosensitive drum 22 is rotated in a direction B so that the surface of the photosensitive drum 22 undergoes a series of processes comprising charging by the charger 23, electrostatic latent image formation by the exposure device 24, and toner image formation by the developing device 25 (Fig. 2).

[0031] Next, a toner image on the photosensitive drum 22 is transferred to the transfer-fixing film 27 which is rotating the photosensitive drum 22 and moving in a direction C. At this time, a voltage is applied to the transfer roller 2 from a power source 210 so as to generate electrostatic force.

[0032] As shown in Fig. 3, in order to fix the toner image on the transfer-fixing film 27 onto the booklet 21, the roller 1 is moved in a direction D, and synchronously, the heat-generating element 6 and the spring 5 are moved in a direction E by the drive source 4 while tension on the transfer-fixing film 27 is maintained substantially at a constant value. For the purpose of maintaining the tension at a constant value, the roller 3 is elastically supported by an elastic member like a spring, or a tension sensor for measuring the tension of the transfer-fixing film 27 is provided for controlling the displacements of the feed roller 1 and the drive source 4 in response to a signal from this sensor.

[0033] Thus, the transfer-fixing film 27 contacts with the booklet 21. The toner 26 of the toner image on the contact surface of the transfer-fixing film 27 is heated by the heat-generating element 6 from the back surface of the film 27, and also, the toner 26 is pressed against the booklet 21 under a desired pressure by the drive source 4 and the spring 5. Therefore, the booklet 21 is held between the transfer-fixing film 27 and the back-up roller 14. In consequence, the toner image on the transfer-fixing film 27 is melted by heat, and transferred and fixed onto a sheet surface of the booklet 21 by the pressure when it is held.

[0034] When the booklet 21 is held, the booklet 21 starts to be delivered in the direction A again. A speed of movement of the booklet 21 in the direction A corresponds to a speed of movement of the transfer-fixing film 27 in the direction C (Fig. 3). In this state, the toner is transferred and fixed onto a predetermined portion of the booklet 21 for printing.

[0035] When the heat-generating element 6 approaches the stitched portion 21a of the booklet 21, the heat-generating element 6 and the spring 5 are moved in a direction E' by the drive source 4, and also, the roller 1 is moved in a direction D', so that the booklet 21 and the transfer-fixing film 27 are no longer in contact with each other (Fig. 4).

[0036] If the transfer-fixing film, to which only the toner image corresponding to a printing portion has been transferred in advance, is stopped and only the booklet is delivered, the heat load on the thermal transfer film

can be reduced, and the frequency of use of the film can be decreased, thus extending the service life of the transfer-fixing film.

[0037] A condition of the heat-generating element 6 approaching the stitched portion 21a of the booklet 21 is judged by the size of the booklet 21 which has been measured separately and by the distance of movement of the booklet from the sensor 15. The size of the booklet is calculated, for example, from a result of detection by a sensor provided on a booklet insertion opening or the like and from the feeding speed of the booklet.

[0038] If a portion of the booklet 21 in the vicinity of the stitched portion 21a must be printed, the transfer-fixing film 27 is delivered in the printing state shown in Fig. 3 without moving the heat-generating element 6 and the roller 1, and in the vicinity of the stitched portion approaches, the film 27 is pressed by a force larger than the pressing force, by which printing is preformed on a flat portion of the booklet. That is to say, during printing, when the pressing force for printing the vicinity of the stitched portion is made higher than that for printing other portions, in accordance with a thickness change in the vicinity of the stitched portion, a local curvature change or bulge of the booklet can be suppressed, thereby improving accuracy of the printing position.

[0039] When the stitched portion 21a of the booklet 21 is passed, the heat-generating element 6 is again moved in the direction E by the drive source 4, and the roller 1 is moved in the direction D, so as to bring the transfer-fixing film 27 into contact with the booklet 21 and to start printing. At this time, the heat-generating element 6 and the roller 1 are moved in such a manner as to maintain the tension of the transfer-fixing film 27 substantially at a constant value (Fig. 5).

[0040] When the toner image disappears from the transfer-fixing film 27 or when a command for finishing printing is issued, the drive source 4 moves the spring 5 and the heat-generating element 6 in the direction E', and the roller 1 is moved in the direction D'. Then, the booklet 21 is delivered on the paper pan 12 in the direction A by the feed rollers 9, 10 so as to be subjected to the subsequent process (Fig. 6).

[0041] Through the above-described procedures, printing on the booklet is effected.

[0042] If the transfer-fixing film 27 is thermally deformed, the toner image will be disturbed. Therefore, the transfer-fixing film 27 must have a glass-transition temperature Tf which is at least higher than a glass-transition temperature Tt of the toner which is a thermoplastic high molecular polymer. Generally, the glass-transition temperature Tt of the toner is about 100°C, and consequently, a material of the transfer-fixing film may be a thermosetting polyimide which has no glass-transition temperature or a thermoplastic polyimide having a glass-transition temperature of not lower than 200°C.

[0043] As one example of the booklet to be printed, Figs. 7 to 9 show a passbook used in a financial institution such as banks.

[0044] Fig. 7 is a schematic perspective view of the passbook. A magnetic stripe 32 and a protection film 31 made of PET (polyethylene terephthalate) or the like for protecting the magnetic stripe 32, are adhered to the surface of the passbook 30. Generally, a glass-transition temperature of PET is not higher than 100°C. If a heat-generating element such as a PTC thermistor in a heated state contacts with the PET film, the PET film may possibly be heated to about 150 to 200°C, and the adhesion surface between the PET film and the magnetic stripe may be deviated from each other due to thermal deformation. After contraction, it is highly probable that wrinkles will be formed.

[0045] Therefore, at the time of transfer and fixing of the toner onto the surface of the passbook, heating must be effected except for that portion of the passbook, to which the protection film 31 is adhered.

[0046] In the electrophotographic copying apparatus of this embodiment, the passbook 30 is fed in the direction A and contacts with the transfer-fixing film at a band-shaped contact portion extending perpendicular to the direction A, for example, at a contact surface 33. As shown in Fig. 7, a heating area has a width Wh from an end of the passbook 30 whereas a non-heating area has a width Wn from the end of the passbook 30.

[0047] Fig. 8 is a schematic cross-sectional view of the passbook shown in Fig. 7, including the protection film portion. The passbook 30 comprises a cover 30a made of cotton cloth and paper which is generally called cloth reinforced paper, leaves 30b, the magnetic stripe 32 and the protection film 31 of PET or the like.

[0048] Fig. 9 shows a passbook 35 having a different configuration from the passbook 30 shown in Fig. 7.

[0049] As shown in Fig. 9, a magnetic stripe 36 has a band-shape and extends perpendicular to the feeding direction of the passbook 35 (direction A), and the magnetic stripe 36 is adhered to a trailing end portion of the passbook in the feeding direction. When printing the surface of such a passbook, the transfer-fixing film 27 contacts with the passbook 35 in a heating area of a length Lh from an end of the passbook 35. However, the transfer-fixing film 27 does not contact with the passbook 35 in a non-heating area of the remaining length Ln, so as to prevent the protection film from being heated. Even if the transfer-fixing film 27 is in contact with the passbook 35, the protection film can be prevented from being heated by not heating the heat-generating element. However, the foregoing method of keeping the transfer-fixing film 27 away from the non-heating area of the passbook 35 is more effective.

[0050] Next, the structure of the transfer-fixing film and the outline of the transfer process will be described with reference to Figs. 10 and 11.

[0051] Fig. 10 is a schematic cross-sectional view showing one example of the structure of the transfer-fixing film 27. The transfer-fixing film 27 comprises a tetrafluoroethylene layer 40 formed on the surface, to which the toner is transferred, and adapted for a toner-

releasing property, and a polyimide layer 41, in which carbon is mixed, and accommodating for electric conductivity and heat resistance. The film, which is formed of a polyimide having a heat resistance, is hardly stretched or deformed by heat, thereby maintaining a high transfer accuracy. The tetrafluoroethylene layer 40 formed on the surface of the film, to which the toner image is transferred, has a high toner-releasing property whereby the toner can be reliably shifted to the recording medium at the time of transfer.

[0052] As shown in Fig. 10, due to an electrostatic force between the photosensitive drum 22 and the transfer-fixing film 27 having an electric conductivity, toner 26a on the photosensitive drum 22 is shifted onto and adhered to the tetrafluoroethylene layer 40 to result in toner 26b. Carbon included in the polyimide layer 41 serves to provide electric conductivity for the polyimide which inherently has no conductivity. By grounding the polyimide layer, charge of the transfer-fixing film can be prevented from increasing.

[0053] Fig. 11 is a schematic cross-sectional view showing a transfer-fixing film according to another embodiment. This transfer-fixing film comprises in addition to a tetrafluoroethylene layer 42 and a polyimide layer 43, as shown in Fig. 10, a metal coating layer 44 formed on the opposite side of the polyimide layer 43 from the tetrafluoroethylene layer 42.

[0054] Since the metal coating layer 44 is disposed to be close to the polyimide layer 43, there is no gap between the two layers, so that the polyimide layer 43 can be reliably grounded through the metal coating layer 44.

[0055] Figs. 13 to 15 show the structure of the heat-generating element 6. The heat-generating element 6 comprises heat-generating chips formed of PTC thermistors (hereinafter referred to as PTC heat-generating chips). Fig. 13 is a perspective view of a PTC heat-generating chip 70. The PTC heat-generating chip 70 has a shape of rectangular parallelepiped, and includes electrodes provided on the upper and lower surfaces thereof. Two divided electrodes 71a, 71b are formed on the upper surface of the PTC heat-generating chip 70, the electrodes 71a, 71b each having a predetermined width from either side of the upper surface along the lateral direction. An electrode 72 is formed on the entire lower surface of the PTC heat-generating chip 70.

[0056] Fig. 14 is a diagram showing the wiring with respect to the PTC heat-generating chip 70. A wire 81 from a power source 90 is adhered or press-fitted to the divided electrodes 71a, 71b so as to be electrically connected.

[0057] The surface of the full-face electrode 72 is adhered to a radiation surface of a heat radiator plate.

[0058] Fig. 15 is a perspective view showing the structure of the heat-generating element 6. The heat-generating element 6 can be divided into three sections, i.e., a heater 74, a holder 75 and an elastic member 77. The heat-generating element 6 is manufactured by connecting the heater 74, the elastic member 77 and the holder 75 in this order by an adhesive in such a manner that the heater 74 and the elastic member 77 are closely fitted in a recess of the holder 75. Preferably, the adhesive is elastic and has heat insulating and electricity insulating properties. Although a silicone-based adhesive is used in this embodiment, a polyimide-based adhesive may also be used. The holder 75 is made of aluminum.

[0059] The elastic member 77 is designed in such a manner that even if the holder 75 is thermally deformed, the heater 74 steadily contacts with the transfer-fixing film 27. In this embodiment, a plate of silicone rubber is used. However, any other material can be used so long as it has elasticity and a high heat resistance. A leaf spring or a coil spring made of metal may be used.

[0060] The heater 74 is constructed such that a radiation plate 80 is adhered to the full-face electrodes of the PTC heat-generating chips 70 through an adhesive which is excellent in heat conduction and electric insulation. As shown in Fig. 14, the wire 81 is adhered to the surfaces of the PTC heat-generating chips 70 formed with the divided electrodes 71a, 71b. Electric connection of the wire is not always effected by adhesion but it may be done by crimping. Side surfaces of the heater 74 except the radiation plate 80 are covered with a concave support frame 76 made of a heat insulating material, thereby preventing heat conduction to the holder 75.

[0061] As shown in Fig. 15, a plurality of PTC heat-generating chips 70 are provided in series in the longitudinal direction. Therefore, the PTC heat-generating chips 70 can be individually heated. Further, by combining PTC heat-generating chips of different Curie points, a desired temperature distribution can be set for the heat-generating element.

[0062] Thus, even if the surface of the recording medium has some portions which can not be heated, current supply to the plurality of PTC thermistors which constitute the heat-generating element can be controlled individually for partial heating. Consequently, even if substances of low heat resistance such as PET (polyethylene terephthalate) and seals exist, printing can be performed without affecting these substances. Besides, as for portions of such substances of low heat resistance, the heat-generating element or the back-up roller may be moved away from the recording medium.

[0063] According to the above-described embodiment, a recording medium of a large thickness can be printed from the printing surface, and also, a recording medium having a thickness which varies can be printed easily. Further, the heat-generating element can be moved away from a recording medium during recording. Therefore, if the recording medium includes portions which do not need recording, the heat-generating element is not pressed against the recording medium while the recording medium alone is delivered, so that service life of the transfer-fixing film can be extended.

[0064] The structure and the operation of an electrophotographic copying apparatus according to another embodiment will now be described with reference to

Figs. 16 to 21.

[0065] As shown in Fig. 16, the electrophotographic copying apparatus of this embodiment is different from the foregoing embodiment in that a back-up roller is movably provided opposite to a heat-generating element 6, and that component parts on the transfer-fixing film side are designed not to move. A feeding passage for delivering a booklet 21 is defined by a paper pan 12 which serves as first guide means, and by paper guides 11 and 19 which serve as second guide means. The feeding passage is provided with feeding means which comprises drive feed rollers 10, 20 and driven feed rollers 9, 18 which face the drive rollers to contact therewith. The driven rollers 9, 18 are supported by springs 8, 17, which are supported by drive sources 7, 16, respectively, to thereby control forces of the driven rollers 9, 18 for pressing the booklet 21.

[0066] If the thickness of the booklet 21 is small, the drive sources 7, 16 may be dispensed with. In order to increase the feeding forces, drive rollers can be used in place of the driven rollers 9, 18.

[0067] Sensors 13, 15 are provided for detecting a condition of the booklet 21 entering into the printing unit and for positioning the booklet 21. The heat-generating element 6 is supported by the spring 5 to apply a predetermined pressure to the booklet, and is opposed to the back-up roller 81 through the paper pan 12.

[0068] In this embodiment, PTC thermistors are used as the heat-generating element. Preferably, the springs may be compression coil springs. Other elastic materials such as rubber may be employed.

[0069] The back-up roller 81 is supported by a drive source 84 such as a solenoid for causing displacement so as to press the surface of the booklet 21 against the transfer-fixing film 27 in the form of a belt, and a spring 83 for controlling a pressing force. The paper guide 11 is located in the vicinity of the heat-generating element 6 so that the booklet 21 which has been pressed against the transfer-fixing film 27 can be returned to a correct position on the feeding passage.

[0070] The transfer-fixing belt 27 is trained round rollers 1, 2 and 3 and the heat-generating element 6, and rotated when it receives a driving force from the drive roller 2.

[0071] A charger 23, an exposure device 24 and a developing device 25 are provided close to the photosensitive drum 22, so that the toner 26 is transferred from the developing device 25 to the photosensitive drum 22 by electrostatic force to form a toner image. A distance L0 between the axes of the feed rollers 10 and 20 is determined to be at least shorter than a length of the booklet 21 in an opened condition along the feeding direction. In order to print the cover of the booklet, the distance L0 must be shorter than a length of the booklet 21 in a closed condition along the feeding direction.

[0072] The booklet 21 is delivered on the paper pan 12 in a direction A by the feed rollers 18, 20, and when the sensor 15 detects the booklet 21, the booklet 21 is stopped (Fig. 17).

[0073] In accordance with rotation of the drive roller 2, the photosensitive drum 22 is rotated in a direction B so that the surface of the photosensitive drum 22 undergoes a series of processes which comprises charging by the charger 23, electrostatic latent image formation by the exposure device 24, and toner image formation by the developing device 25 (Fig. 17).

[0074] A toner image on the photosensitive drum 22 is transferred to the transfer-fixing film 27 moving in a direction C. Feeding of the booklet is started to print the transferred toner image on that portion of the booklet which is to be printed. When the booklet approaches a transfer-fixing area where it is held between the heat-generating element 6 and the back-up roller 81, the back-up roller 81 is moved in a direction F by the drive source 84 so as to fix the toner image on the transfer-fixing film 27 onto the booklet 21. Thus, the transfer-fixing film 27 contacts with the booklet 21. The toner 26 of the toner image on the transfer-fixing film 27 is heated by the heat-generating element 6 from the back surface of the film 27, and also, the toner 26 is pressed against the booklet 21 under a desired pressure by the drive source 84 and the spring 83. Therefore, the booklet 21 is held between the transfer-fixing film 27 and the back-up roller 81, and the toner image on the transfer-fixing film 27 is transferred and fixed onto a sheet surface of the booklet 21. A speed of movement of the booklet 21 in the direction A is made to correspond to a speed of movement of the transfer-fixing film 27 in the direction C (Fig. 18).

[0075] Subsequently, when the booklet 21 is delivered in the direction A and the stitched portion 21a of the booklet 21 approaches the heat-generating element 6, the back-up roller 81 and the spring 83 are moved in a direction F' by the drive source 84, so that the booklet 21 and the transfer-fixing film 27 are no longer in contact with each other (Fig. 19). If a portion of the booklet 21 in the vicinity of the stitched portion 21a must be printed, the transfer-fixing film 27 is pressed by a force larger than the reaction force at the time when a flat portion of the booklet is printed. Since the stitched portion 21a of the booklet 21 is recessed and neighboring portions of the stitched portion are curved and bulge upwardly, the curved surface must be corrected into a flat surface by the pressing force. This pressing force varies in accordance with rigidity, a binding manner and the number of leaves of the booklet.

[0076] When neighboring portions of the stitched portion 21a of the booklet 21 go past, the back-up roller 81 is again moved in the direction F so as to press the booklet against the heat-generating element 6. At this time, the pressing force of the back-up roller 81 is controlled by the drive source 84 (Fig. 20).

[0077] When the toner image disappears from the transfer-fixing film 27 or when a command for finishing printing is issued, the drive source 84 returns the back-up roller 81 in the direction F'.

[0078] The booklet 21 is delivered on the paper pan 12 in the direction A by the feed rollers 9, 10 so as to be subjected to the subsequent process (Fig. 21).

[0079] As another embodiment of the invention, a booklet printer will be described with reference to Fig. 22. In this embodiment, a stitched portion of a booklet is inserted in the printer in a direction, in which a stitched portion of the booklet is made perpendicular to the feeding direction of the booklet.

[0080] The booklet printer 200 at least comprises: an insertion opening 100 through which the booklet is inserted; pairs of feed rollers 102 and 103, 127 and 124, and 106 and 107 for delivering the booklet inserted from the insertion opening 100; a feeding passage extending from the insertion opening 100 through the three pairs of feed rollers; magnetic information reading means 104 for reading magnetic information recorded on the booklet; magnetic information recognizing means 130 which recognizes the magnetic information read by the magnetic information reading means 104 to transmit the information to a data interface; image information reading means 105 for reading contents in the booklet in the form of an image; image information recognizing means 131 which recognizes the image information read by the image information reading means 105 to transmit the same to the data interface; a drive motor 108 for drivingly rotating feed rollers 102, 127, 106, 116 and a backup roller 109 opposed to a heat-generating element 111; a photosensitive drum 121 described in the foregoing embodiments; a charger 120; an exposure device 119 comprising a laser or LED; a developing device 118; a transfer-fixing film 136; rollers 115, 122, 116 for delivering the transfer-fixing film 136; the heat-generating element 111; a spring 112; a drive source 113 for moving the heat-generating element 111 to press it against the booklet; paper guides 128, 126; sensors 101, 123, 110 for detecting positions of the booklet; the data interface 132 for receiving signals from the magnetic information recognizing means 130, the image information recognizing means 131 and the sensors; a processing unit 133 which processes information of the data interface 132 and transmit processing results to a controller; and the controller 134 which transmits control signals to the drive source 113, the roller 115, the photosensitive drum 121, the developing device 118, the exposure device 119 and the drive motor 108 on the basis of the processing results from the processing unit 133 so as to control operations of these components.

[0081] Incidentally, the processing unit 133 may transmit the booklet information from the data interface to a computer (not shown), so that the computer may receive printing data derived from information which has been additionally inputted by the customer, and may transmit the data to the controller. When the sensor 101 detects the booklet 137, of which a page to be printed has been opened and which is inserted in the direction A from the insertion opening 100, the feed rollers are rotated in response to a signal from the controller 134, to thereby feed the booklet into the apparatus. Both the feed rollers may be rotated at once, or only that feed roller which serves to deliver the booklet may be operated.

[0082] Information written on a magnetic stripe adhered to the cover of the fed booklet is read by the magnetic information reading means 104, and the information is recognized by the magnetic information recognizing means 130. Then, an information about a page to be printed, i.e., a number of a page to be printed, and a linage of the page having been printed is read by the image information reading means 105, and the image information is recognized by the image information recognizing means 131.

[0083] The processing unit judges whether printing can be effected or not, from the information from the magnetic information recognizing means 130 and the image information reading means 105. In order to effect printing, operation signals are transmitted to the respective moving parts through the predetermined procedures on the basis of printing data which has been transmitted from the computer (not shown) to the processing unit. Also, the printing data is transmitted to the exposure device to be written on the photosensitive drum by the exposure device comprising the laser or LED (light-emitting diode), thus printing the data on the booklet through the procedures described in the foregoing embodiments. Printing the booklet is such that a distance of movement of the booklet is calculated from the output of the sensor 110 and a rotation angle of the drive motor 108 to find the position of the booklet. Moreover, on the basis of the distance of movement of the booklet, the pressing force is changed in accordance with a portion of the booklet before the stitched portion, a portion in the vicinity of the stitched portion, and a portion after the stitched portion. If the portion in the vicinity of the stitched portion need not be printed, the heat-generating element is retreated in the above-described manner.

[0084] When the processing unit judges that a format comprising a predetermined frame or column and required characters and numerals need be printed on the booklet 137, a format printing information and an information to be written in the format are superposed on each other in the processing unit 133 to be printed. This format printing information is stored in an ROM or the like.

[0085] The printing data is developed in a font in the processing unit 133. The surface of the photosensitive drum 121 which has been charged by the charger 120 is exposed by the exposure device 119 comprising the laser or LED, and formed with a toner image by the developing device 118.

[0086] This toner image is transferred to the transfer-fixing film 27 made of a polyimide film, the surface of which is coated with tetrafluoroethylene, and which film has electric conductivity and a toner releasing property. The transferred toner image is carried by the transfer-fixing film which is applied with a predetermined tension

and delivered by the feed rollers 115, 116, 122. Then, the toner image is fixed on the booklet by the heat-generating element 111 which is pressed against the back-up roller 109 by the drive source 113 and the spring 112.

[0087] The processing unit 133 calculates a thickness of the booklet from the magnetic information and the image information, and a position of the booklet from a detection result of the sensor 123 and a rotation angle of the drive motor 108, as described before.

[0088] On the basis of the thickness, shape, printing position and so forth of the booklet 137, the processing unit 133 issues a pressing force control command to the drive source 113. This command performs control such that the pressing force in the vicinity of the stitched portion of the booklet 137 is increased, and the pressing force is changed in accordance with the thickness of the booklet 137 during printing. As shown in Fig. 22, the stitched portion of the booklet 137 extends perpendicular to the feeding direction A. Therefore, bulging of the stitched portion causes the thickness of the booklet to differ at each position along the feeding direction.

[0089] Fig. 23 illustrates a pressing force required for printing a booklet having ten leaves, in accordance with printing positions. In Fig. 23, for instance, an indication "ONE LEAF" means that the number of leaves on the inserted side is one, i.e., the reverse side of a cover and one side of a subsequent, second leaf are subjected to printing, and so the remaining nine leaves follow a stitched portion of the booklet. In the case of "ONE LEAF", the pressing force is set at three levels, i.e., a low level at least before the stitched portion, a high level in the vicinity of the stitched portion, and an intermediate level on the higher side after the stitched portion. In the case of "NINE LEAVES", the order of three levels is reverse to that in the case of "ONE LEAF". The pressing force is set at an intermediate level on the higher side at first, at a high level at the stitched portion, and at a low level after the stitched portion. The pressing force may be changed from a portion far from the stitched portion to a portion close to the stitched portion. By controlling the pressing force in this manner, lines, figures and characters can be highly accurately printed on leaves having different thickness. Pressing force control patterns are stored in the controller in advance, and a required pattern is used in accordance with the number of leaves of a booklet to be printed. The number of leaves of a booklet is recorded on the cover of the booklet in the form of magnetic information, so that the number of leaves is read when the booklet is inserted. Alternatively, booklets having a predetermined number of leaves are employed.

[0090] The toner which has not been used for printing but remained on the photosensitive drum 121 is removed by a cleaner 117b. Further, the toner which has not been transferred and fixed but remained on the transfer-fixing film 136 is removed by a cleaner 117a.

[0091] Fig. 24 shows a booklet 201 which has undergone format printing by the booklet printer 200 shown in Fig. 22. Format printing is, for example, as shown in Fig. 24, to print columns 202 for date, code, sum A, sum B, balance and so forth on a blank sheet of a booklet.

[0092] Required formats of recording frames and characters to be recorded on recording media are stored in a memory in advance. For instance, when two facing pages are printed for the first time, a format as well as printing items is printed on the pages. Thus, blank recording media can be used.

[0093] The booklet 201 has a thickness which varies on both sides of a stitched portion 203 when the booklet 201 is opened. Portions of the booklet 201 in the vicinity of the stitched portion 203 are apt to bulge. Therefore, by controlling the pressing force during the fixing operation in the above-described manner, a toner image on a film can be fixed on the booklet without deforming the toner image.

[0094] According to this embodiment, when two facing pages of a booklet or the like are printed, the pressing force is changed in accordance with the thickness of the booklet or the like which may vary at different printing positions, so that the booklet or the like can be highly accurately printed under the condition suitable for each printing position. Information and the format can be printed on the booklet or the like at once, and even if the format is changed, printing on the booklet or the like can be appropriately managed.

[0095] As has been described heretofore, according to the present invention, there can be provided an electrophotographic copying apparatus which can print a recording medium from the printing surface side, so that printing can be effected irrespective of the thickness of the recording medium.

[0096] Also, there can be provided an electrophotographic copying apparatus, in which a heat-generating element can be moved to come toward and away from a recording medium, or a pressing force can be changed in accordance with the thickness of a portion of the recording medium to be printed, so that highly accurate printing can be effected on a booklet such as a bankbook which requires printing on two facing pages and is varied in thickness.

Claims

1. An electrophotographic printing apparatus comprising transfer means for receiving from a photosensitive drum (22, 121) a toner image (26) corresponding to printing information, and fixing means (4, 5, 6; 111, 112, 113) for transferring and fixing the toner image on the transfer means onto a recording medium (21, 137), **characterized in that** the transfer means is movable to come toward and away from a printing surface of the recording medium (21, 137).

2. An apparatus according to Claim 1, **characterized**

in that said recording medium is a booklet (21, 137).

3. An apparatus according to claim 1 or 2, **characterized in that** the fixing means (4, 5, 6; 111, 112, 113) include a heat-generating element (6, 111), and a force generating means for pressing the heat-generating element (6, 111) against the recording medium (21, 137) with a changeable force.

4. An apparatus according to Claim 3, **characterized in that** said recording medium is a booklet (21, 137), and said pressing force is changed in accordance with a thickness and a thickness change of the booklet.

5. An apparatus according to any one of Claims 1 to 4, **characterized in that** said fixing means (4, 5, 6; 111, 112, 113) comprise a heat-generating element (6, 111), a spring (5, 112) for supporting the heat-generating element, and a drive source (4, 113) for moving the heat-generating element.

6. An apparatus according to Claim 5, **characterized in that** said heat-generating element (6, 111) comprises a PTC thermistor (70).

7. An apparatus according to Claim 6, **characterized in that** said heat-generating element (6, 111) comprises a plurality of PTC thermistors (70).

8. An apparatus according to Claim 6, **characterized in that** said heat-generating element (6, 111) comprises a plurality of PTC thermistors (70), and heat generated from the plurality of PTC thermistors can be separately controlled for the respective thermistors.

9. An apparatus according to any one of Claims 1 or 3, **characterized in that** said transfer means is in the form of an endless belt.

10. An electrophotographic copying apparatus according to any one of Claims 1 or 3, **characterized in that** said transfer means is in the form of an endless belt, and provides therein fixing means (4, 5, 6; 111, 112, 113) which comprises a heat-generating element (6, 111), a spring (5, 112) for supporting the heat-generating element, and a drive source (4, 113) for moving the heat-generating element.

11. An apparatus according to Claim 9 or 10, **characterized in that** said transfer means in the form of an endless belt is made of a polyimide film including a tetrafluoroethylene layer (40, 42) formed on a surface thereof, to which the toner image is transferred.

12. An apparatus according to Claim 9 or 10, **characterized in that** said transfer means in the form of an endless belt is made of a core material (43) which is a polyimide film and includes a tetrafluoroethylene layer (42) formed on one surface of the core material, to which the toner image is transferred, and a metal coating layer (44) formed on the other surface of the core material.

13. An apparatus according to Claim 11 or 12, **characterized in that** said polyimide film contains carbon.

14. An electrophotographic copying apparatus according to Claim 2 or 4, **characterized in that** said booklet (21, 137) includes a storage portion (32, 36), in which a format to be written on the booklet is stored.

15. An electrophotographic printing apparatus including a photosensitive drum (22, 121) for forming a toner image (26) corresponding to printing information, charger means (23, 120) for charging the photosensitive drum, exposure means (24, 119) for forming an electrostatic latent image corresponding to the printing information on the photosensitive drum, developing means (25, 118) for forming the toner image by attaching a toner to the electrostatic latent image, transfer means comprising a transfer-fixing film (27, 136) to which the toner image is transferred from the photosensitive drum (22, 121), fixing means (4, 5, 6; 111, 112, 113) for transferring and fixing the toner image on the transfer-fixing film onto a recording medium (21, 137), and feed rollers (10, 14, 20; 102, 106, 109, 127) for delivering the recording medium (21, 137), and control means (134) for controlling operations of the photosensitive drum, the charger means, the exposure means, the developing means, the transfer means, the fixing means and the feed rollers on the basis of the printing information, information of the recording medium and information from a means for detecting a position of the recording medium, **characterized in that** the transer-fixing film is movable toward and away from a printing surface of the recording medium (21, 137).

16. An apparatus according to claim 15, photosensitive drum (22, 121) for forming a toner image corresponding to printing information, transfer means for transferring the toner image to a transfer body (27, 136), fixing means (4, 5, 6; 111, 112, 113) for transferring and fixing the toner image on the transfer body onto a recording medium (21, 137), and feed rollers (10, 14, 20; 102, 106, 109, 127) for delivering the recording medium, so as to transfer and fix the toner image corresponding to the printing information **characterized in** further comprising means (132, 133) for calculating a position of the recording medium from a recording medium passing signal fed by a sensor (123) located upstream of the fixing

means in a feeding direction, and a rotational angle of feed rollers (20, 127) located upstream of the sensor in the feeding direction, and means (4, 5, 112, 113) for causing a heat-generating element (6, 111), which constitutes the fixing means and operates to come toward and away from the printing surface of the recording medium with the transfer body therebetween, to come toward and away from the recording medium in accordance with the calculated position of the recording medium.

17. A apparatus according to claim 15, **characterized in** further comprising means (132, 133) for calculating a position of the recording medium from a recording medium passing signal fed by a sensor (123) located upstream of the fixing means in a feeding direction, and a rotational angle of feed rollers (20, 127) located upstream of the sensor in the feeding direction, and means (4, 5, 112, 113) for changing a heat-generating element (6, 111), which constitutes the fixing means and presses against the printing surface of the recording medium through the transfer means, in accordance with the calculated position of the recording medium.

18. An apparatus according to claim 15, **characterized in** further comprising means (83, 84) for moving a back-up roller (81) provided opposite to a heat-generating element (6, 111), which constitutes the fixing means and transmits heat to the printing surface of the recording medium through the transfer means, to hold the recording medium between it and the transfer means and to be movable away from the heat-generating element, in a direction away from the heat-generating element in the course of recording of the recording medium (21, 137).

19. An apparatus according to one of the Claims 16 to 18, **characterized in that** said recording medium is a booklet (21, 137) and includes a storage portion (32, 36), in which a format to be written on the booklet is stored, and the format stored in the storage portion and printing information are superposed on each other and printed on the booklet as desired.

20. An apparatus according to Claim 17, **characterized in that** said recording medium is a booklet (21, 137), and when the booklet is fed in such a direction that a stitched portion (21a, 203) of the booklet extends perpendicular to a feeding direction of the recording medium, said pressing force is increased in the vicinity of the stitched portion and decreased on both sides of the stitched portion.

Patentansprüche

1. Elektrophotografische Druckvorrichtung mit einer Übertragungseinrichtung zum Empfangen eines einer Druckinformation entsprechenden Tonerbilds (26) von einer photoempfindlichen Trommel (22, 121), und einer Fixiereinrichtung 4, 5, 6; 111, 112, 113) zum Übertragen und Fixieren des Tonerbilds auf der Übertragungseinrichtung hin zu einem Aufzeichnungsmedium (21, 137),
dadurch gekennzeichnet, daß
die Übertragungseinrichtung von einer Druckoberfläche des Aufzeichnungsmediums (21, 137) weg und zu ihr hin beweglich ist.

2. Vorrichtung nach Anspruch 1, **dadurch gekennzeichnet, daß** das Aufzeichnungsmedium ein Büchlein (21, 137) ist.

3. Vorrichtung nach Anspruch 1 oder 2, **dadurch gekennzeichnet, daß** die Fixiereinrichtung (4, 5, 6; 111, 112, 113) ein Wärmeerzeugungselement (6, 111) aufweist und eine Krafterzeugungseinrichtung zum Drücken des Wärmeerzeugungselements (6, 111) gegen das Aufzeichnungsmedium (21, 137) mit veränderbarer Kraft.

4. Vorrichtung nach Anspruch 3, **dadurch gekennzeichnet, daß** das Aufzeichnungsmedium ein Büchlein (21, 137) ist und die Drückkraft nach Maßgabe der Dicke und der Dickenänderung des Büchleins geändert wird.

5. Vorrichtung nach einem der Ansprüche 1 bis 4, **dadurch gekennzeichnet, daß** die Fixiereinrichtung (4, 5, 6; 111, 112, 113) ein Wärmeerzeugungselement (6, 111) aufweist, eine Feder (5, 112) zum Halten des Wärmeerzeugungselements und eine Antriebsquelle (4, 113) zum Bewegen des Wärmeerzeugungselements.

6. Vorrichtung nach Anspruch 5, **dadurch gekennzeichnet, daß** das Wärmeerzeugungselement (6, 111) einen PTC-Thermistor (70) aufweist.

7. Vorrichtung nach Anspruch 6, **dadurch gekennzeichnet, daß** das Wärmeerzeugungselement (6, 111) mehrere PTC-Thermistoren (70) aufweist.

8. Vorrichtung nach Anspruch 6, **dadurch gekennzeichnet, daß** das Wärmeerzeugungselement (6, 111) mehrere PTC-Thermistoren (70) aufweist, wobei die von den jeweiligen PTC-Thermistoren erzeugte Wärme für den jeweiligen Thermistor getrennt gesteuert werden kann.

9. Vorrichtung nach Anspruch 1 oder 3, **dadurch gekennzeichnet, daß** die Übertragungseinrichtung als Endlosband ausgebildet ist.

10. Elektrophotografische Kopiervorrichtung nach An-

spruch 1 oder 3, **dadurch gekennzeichnet, daß** die Übertragungseinrichtung als Endlosband ausgebildet ist und darin eine Fixiereinrichtung (4, 5, 6; 111, 112, 113) aufweist, die ein Wärmeerzeugungselement (6, 111) aufweist, eine Feder (5, 112) zum Halten des Wärmeerzeugungselements und eine Antriebsquelle (4, 113) zum Bewegen des Wärmeerzeugungselements.

11. Vorrichtung nach Anspruch 9 oder 10, **dadurch gekennzeichnet, daß** die als Endlosband ausgebildete Übertragungseinrichtung aus einem Polyimidfilm mit einer auf dessen Oberfläche ausgebildeten Tetrafluorethylenschicht (40, 42) gebildet ist, auf die das Tonerbild übertragen wird.

12. Vorrichtung nach Anspruch 9 oder 10, **dadurch gekennzeichnet, daß** die als Endlosband ausgebildete Übertragungseinrichtung aus einem Kernmaterial (43) besteht, das ein Polyimidfilm ist, und eine auf einer Oberfläche des Kernmaterials ausgebildete Tetrafluorethylenschicht (42) aufweist, auf die das Tonerbild übertragen wird, und einer Metallüberzugsschicht (44) auf der anderen Oberfläche des Kernmaterials.

13. Vorrichtung nach Anspruch 11 oder 12, **dadurch gekennzeichnet, daß** der Polyimidfilm Kohlenstoff aufweist.

14. Elektrophotografische Kopiervorrichtung nach Anspruch 2 oder 4, **dadurch gekennzeichnet, daß** das Büchlein (21, 137) einen Speicherbereich (32, 36) aufweist, in dem das Format, mit dem das Büchlein zu beschreiben ist, gespeichert ist.

15. Elektrophotografische Druckvorrichtung mit einer photoempfindlichen Trommel (22, 121) zum Bilden eines Tonerbildes (26) entsprechend einer Druckinformation, einer Ladeeinrichtung (23, 120) zum Laden der photoempfindlichen Trommel, einer Belichtungseinrichtung (24, 119) zum Bilden eines elektrostatischen latenten Bildes entsprechend der Druckinformation auf der photoempfindlichen Trommel, einer Entwicklungseinrichtung (25, 118) zum Bilden des Tonerbildes durch Anbringen von Toner am elektrostatischen latenten Bild, einer Übertragungseinrichtung mit einem Übertragungs-Fixier-Film (27, 136), auf den das Tonerbild von der photoempfindlichen Trommel (22, 121) übertragen wird, einer Fixiereinrichtung (4, 5, 6; 111, 112, 113) zum Übertragen und Fixieren des Tonerbildes auf dem Übertragungs-Fixier-Film hin zu einem Aufzeichnungsmedium (21, 137), und Zuführrollen (10, 14, 20; 102, 106, 109, 127) zum Fördern des Aufzeichnungsmediums (21, 137), und einer Steuerungseinrichtung (134) zum Steuern der Tätigkeiten der photoempfindlichen Trommel, der Ladeeinrichtung, der Belichtungseinrichtung, der Entwicklungseinrichtung, der Übertragungseinrichtung, der Fixiereinrichtung und der Zuführrollen auf der Grundlage der Druckinformation, Information betreffend das Aufzeichnungsmedium und Information von einer Einrichtung zur Erfassung einer Position des Aufzeichnungsmediums, **dadurch gekennzeichnet, daß** der Übertragungs-Fixier-Film auf die Druckoberfläche des Aufzeichnungsmediums (21, 137) zu und von ihr weg bewegbar ist.

16. Vorrichtung nach Anspruch 15, weiter **gekennzeichnet durch** eine Einrichtung (132, 133) zum Berechnen einer Position des Aufzeichnungsmediums aus einem Aufzeichnungsmedium-Passiersignal von einem Sensor (123) stromaufwärts der Fixiereinrichtung in Zuführrichtung, und aus einem Drehwinkel von Zuführrollen (20, 127) stromaufwärts des Sensors in Zuführrichtung, und eine Einrichtung (4, 5, 112, 113), die ein Wärmeerzeugungselement (6, 111), das die Fixiereinrichtung bildet und das so arbeitet, daß es sich auf die Druckfläche des Aufzeichnungsmediums zu und ihr weg bewegt, wobei der Übertragungskörper dazwischen liegt, dazu veranlaßt, nach Maßgabe der berechneten Position des Aufzeichnungsmediums sich auf das Aufzeichnungsmedium zu oder von ihm weg zu bewegen.

17. Vorrichtung nach Anspruch 15, weiter **gekennzeichnet durch** eine Einrichtung (132, 133) zum Berechnen einer Position des Aufzeichnungsmediums aus einem Aufzeichnungsmedium-Passiersignal von einem Sensor (123) stromaufwärts der Fixiereinrichtung in Zuführrichtung, und aus einem Drehwinkel der Zuführrollen (20, 127) stromaufwärts des Sensors in Zuführrichtung, und eine Einrichtung (4, 5, 112, 113), die ein Wärmeerzeugungselement (6, 111), das die Fixiereinrichtung bildet und gegen die Druckoberfläche des Aufzeichnungsmediums über die Übertragungseinrichtung drückt, nach Maßgabe der berechneten Position des Aufzeichnungsmediums.

18. Vorrichtung nach Anspruch 15, **gekennzeichnet durch** eine Einrichtung (83, 84) zum Bewegen einer Gegenrolle (81), die gegenüber eines Wärmeerzeugungselements (6, 111) vorgesehen ist, das die Fixiereinrichtung bildet und Wärme zur Druckoberfläche des Aufzeichnungsmediums **durch** die Übertragungseinrichtung hindurch überträgt, um das Aufzeichnungsmedium zwischen ihm und der Übertragungseinrichtung zu halten, wobei es vom Wärmeerzeugungselement weg in einer Richtung weg vom Wärmeerzeugungselement während der Aufzeichnung des Aufzeichnungsmediums (21, 137) beweglich ist.

19. Vorrichtung nach einem der Ansprüche 16, bis 8, **dadurch gekennzeichnet, daß** das Aufzeichnungsmedium ein Büchlein (21, 137) ist und einen Speicherbereich (32, 36) aufweist, in dem ein Format gespeichert ist, mit dem das Büchlein zu beschreiben ist, wobei das im Speicherbereich gespeicherte Format und die Druckinformation einander überlagert und wie gewünscht in das Büchlein gedruckt werden.

20. Vorrichtung nach Anspruch 17, **dadurch gekennzeichnet, daß** das Aufzeichnungsmedium ein Büchlein (21, 137) ist, wobei dann, wenn das Büchlein so geführt wird, daß der Nahtbereich (21a, 203) des Büchleins sich rechtwinklig zur Führungsrichtung des Aufzeichnungsmediums erstreckt, die Druckkraft in der Nähe des Nahtbereichs erhöht und auf beiden Seiten des Nahtbereichs verringert wird.

Revendications

1. Dispositif d'impression électrophotographique comportant des moyens de transfert pour recevoir, à partir d'un tambour photosensible (22, 121), une image de toner (26) correspondant à des informations d'impression, et des moyens de fixation (4, 5, 6 ; 111, 112, 113) pour transférer et fixer l'image de toner située sur les moyens de transfert sur un support d'enregistrement (21, 137), **caractérisé en ce que** les moyens de transfert sont mobiles pour venir vers une surface d'impression du support d'enregistrement (21, 137), et pour s'éloigner de celle-ci.

2. Dispositif selon la revendication 1, **caractérisé en ce que** ledit support d'enregistrement est un livret (21, 137).

3. Dispositif selon la revendication 1 ou 2, **caractérisé en ce que** les moyens de fixation (4, 5, 6 ; 111, 112, 113) comportent un élément générateur de chaleur (6, 111) et des moyens générateurs de force pour appuyer l'élément générateur de chaleur (6, 111) contre le support d'enregistrement (21, 137) à l'aide d'une force pouvant être modifiée.

4. Dispositif selon la revendication 3, **caractérisé en ce que** ledit support d'enregistrement est un livret (21, 137), et ladite force de pression est modifiée selon une épaisseur et un changement d'épaisseur du livret.

5. Dispositif selon l'une quelconque des revendications 1 à 4, **caractérisé en ce que** lesdits moyens de fixation (4, 5, 6 ; 111, 112, 113) comportent un élément générateur de chaleur (6, 111), un ressort (5, 112) pour supporter l'élément générateur de chaleur, et une source d'entraînement (4, 113) pour déplacer l'élément générateur de chaleur.

6. Dispositif selon la revendication 5, **caractérisé en ce que** ledit élément générateur de chaleur (6, 111) comporte une thermistance à coefficient de température positif (PTC) (70).

7. Dispositif *selon* la revendication 6, **caractérisé en ce que** ledit élément générateur de chaleur (6, 111) comporte une pluralité de thermistances PTC (70).

8. Dispositif selon la revendication 6, **caractérisé en ce que** ledit élément générateur de chaleur (6, 111) comporte une pluralité de thermistances PTC (70), et la chaleur générée par la pluralité de thermistances PTC peut être commandée de manière séparée pour les thermistances respectives.

9. Dispositif selon la revendication 1 ou 3, **caractérisé en ce que** lesdits moyens de transfert ont la forme d'une courroie sans fin.

10. Dispositif de reproduction électrophotographique selon la revendication 1 ou 3, **caractérisé en ce que** lesdits moyens de transfert ont la forme d'une courroie sans fin, et que des moyens de fixation (4, 5, 6 ; 111, 112, 113) sont fournis dans celui-ci, qui comportent un élément générateur de chaleur (6, 111), un ressort (5, 112) pour supporter l'élément générateur de chaleur, et une source d'entraînement (4, 113) pour déplacer l'élément générateur de chaleur.

11. Dispositif selon la revendication 9 ou 10, **caractérisé en ce que** lesdits moyens de transfert ayant la forme d'une courroie sans fin sont constitués d'un film de polyimide comportant une couche de tétrafluoroéthylène (40, 42) formée sur une surface de celui-ci, sur laquelle est transférée l'image de toner.

12. Dispositif selon la revendication 9 ou 10, **caractérisé en ce que** lesdits moyens de transfert ayant la forme d'une courroie sans fin sont constitués d'un matériau de noyau (43) qui est un film de polyimide, et comportent une couche de tétrafluoroéthylène (42) formée sur une surface du matériau de noyau, sur laquelle est transférée l'image de toner, et une couche de revêtement métallique (44) formée sur l'autre surface du matériau de noyau.

13. Dispositif selon la revendication 11 ou 12, **caractérisé en ce que** ledit film de polyimide contient du carbone.

14. Dispositif de reproduction électrophotographique selon la revendication 2 ou 4, **caractérisé en ce que** ledit livret (21, 137) comporte une partie de mé-

morisation (32, 36), dans laquelle un format devant être écrit sur le livret est mémorisé.

15. Dispositif d'impression électrophotographique comportant un tambour photosensible (22, 121) pour former une image de toner (26) qui correspond à des informations d'impression, des moyens formant chargeur (23, 120) pour charger le tambour photosensible, des moyens d'exposition (24, 119) pour former une image électrostatique latente correspondant aux informations d'impression sur le tambour photosensible, des moyens de développement (25, 118) pour former l'image de toner en fixant du toner sur l'image électrostatique latente, des moyens de transfert comportant un film de transfert-fixation (27, 136) sur lequel est transférée l'image de toner à partir du tambour photosensible (22, 121), des moyens de fixation (4, 5, 6 ; 111, 112, 113) pour transférer et fixer l'image de toner située sur le film de transfert-fixation sur un support d'enregistrement (21, 137), et des rouleaux d'alimentation (10, 14, 20 ; 102, 106, 109, 127) pour acheminer le support d'enregistrement (21, 137), et des moyens de commande (134) pour commander les fonctionnements du tambour photosensible, des moyens formant chargeur, des moyens d'exposition, des moyens de développement, des moyens de transfert, des moyens de fixation et des rouleaux d'alimentation sur la base des informations d'impression, d'informations du support d'enregistrement et d'informations provenant de moyens pour détecter une position du support d'enregistrement, **caractérisé en ce que** le film de transfert-fixation est mobile vers une surface d'impression du support d'enregistrement (21, 137), et en s'éloignant de celle-ci.

16. Dispositif selon la revendication 15, comportant un tambour photosensible (22, 121) pour former une image de toner qui correspond à des informations d'impression, des moyens de transfert pour transférer l'image de toner vers un corps de transfert (27, 136), des moyens de fixation (4, 5, 6 ; 111, 112, 113) pour transférer et fixer l'image de toner située sur le corps de transfert sur un support d'enregistrement (21, 137), et des rouleaux d'alimentation (10, 14, 20 ; 102, 106, 109, 127) pour acheminer le support d'enregistrement, de manière à transférer et fixer l'image de toner correspondante aux informations d'impression, **caractérisé en ce qu'**il comporte de plus des moyens (132, 133) pour calculer une position du support d'enregistrement à partir d'un signal de passage de support d'enregistrement délivré par un capteur (123) positionné en amont des moyens de fixation dans une direction d'alimentation, et d'un angle de rotation des rouleaux d'alimentation (20, 127) positionnés en amont du capteur dans la direction d'alimentation, et des moyens (4, 5, 112, 113) pour amener un élément générateur de chaleur (6, 111), qui constitue les moyens de fixation et qui fonctionne pour venir vers la surface d'impression du support d'enregistrement, et pour s'éloigner de celle-ci, le corps de transfert étant entre ceux-ci, à venir vers le support d'enregistrement conformément à la position calculée du support d'enregistrement, et à s'éloigner de celui-ci.

17. Dispositif selon la revendication 15, **caractérisé en ce qu'**il comporte de plus des moyens (132, 133) pour calculer une position du support d'enregistrement à partir d'un signal de passage du support d'enregistrement délivré par un capteur (123) situé en amont des moyens de fixation dans une direction d'alimentation, et d'un angle de rotation des rouleaux d'alimentation (20, 127) situés en amont du capteur dans la direction d'alimentation, et des moyens (4, 5, 112, 113) pour modifier un élément générateur de chaleur (6, 111), qui constitue les moyens de fixation et appuie contre la surface d'impression du support d'enregistrement par l'intermédiaire des moyens de transfert, conformément à la position calculée du support d'enregistrement.

18. Dispositif selon la revendication 15, **caractérisé en ce qu'**il comporte de plus des moyens (83, 84) pour déplacer un rouleau d'appui (81) disposé à l'opposé d'un élément générateur de chaleur (6, 111), qui constitue les moyens de fixation et transmet de la chaleur vers la surface d'impression du support d'enregistrement à travers les moyens de transfert, pour maintenir le support d'enregistrement entre ceux-ci et les moyens de transfert et pour être mobile en s'éloignant de l'élément générateur de chaleur, dans une direction s'éloignant de l'élément générateur de chaleur pendant le déroulement d'enregistrement du support d'enregistrement (21, 37).

19. Dispositif selon la revendication 16 ou 18, **caractérisé en ce que** ledit support d'enregistrement est un livret (21, 137), et comporte une partie de mémorisation (32, 36), dans laquelle est mémorisé un format devant être écrit sur le livret, et le format mémorisé dans la partie de mémorisation et les informations d'impression sont superposés l'un sur l'autre et imprimés sur le livret lorsque souhaité.

20. Dispositif selon la revendication 17, **caractérisé en ce que** ledit support d'enregistrement est un livret (21, 137), et lorsque le livret est alimenté dans une direction telle qu'une partie cousue (21a, 203) du livret s'étend perpendiculairement à une direction d'alimentation du milieu d'enregistrement, ladite force de pression est accrue à proximité de la partie cousue, et diminuée sur les deux côtés de la partie cousue.

FIG. 1

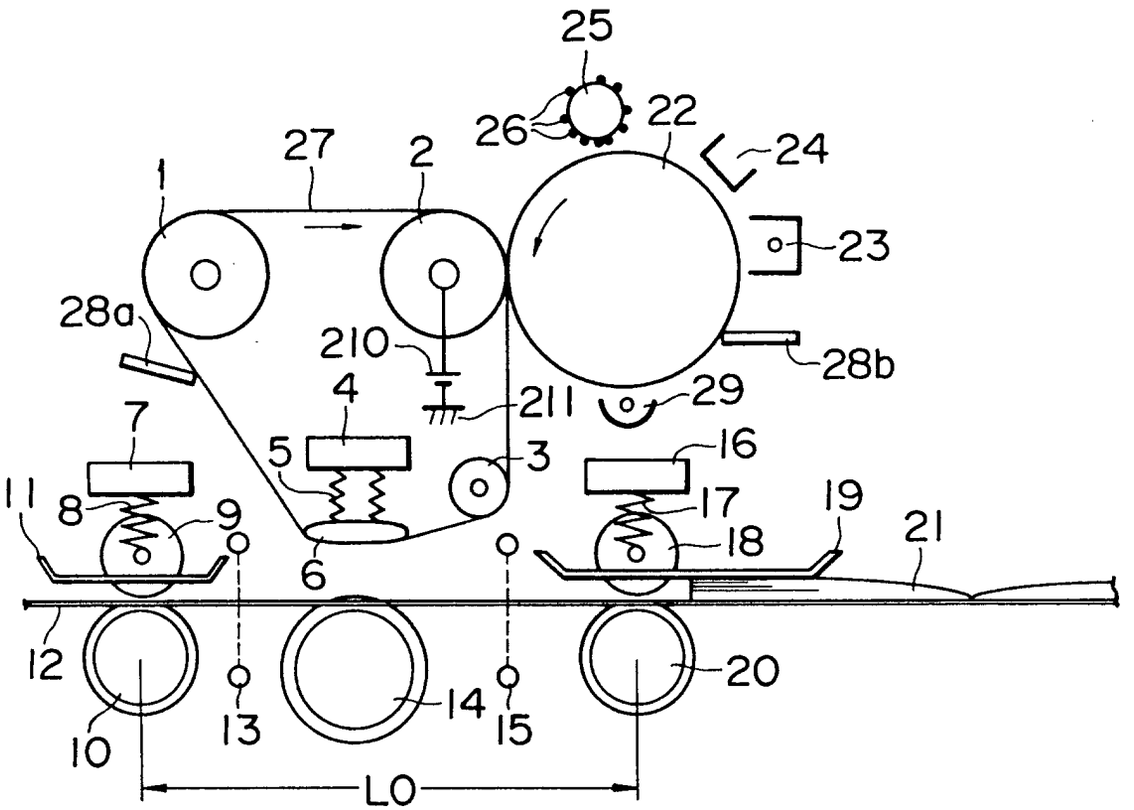
25
26
22
24
27
2
1
23
28a
210
28b
211
29
4
7
5
3
16
11
8
9
17
19
21
18
6
12
20
10
13
14
15
L0

FIG. 2

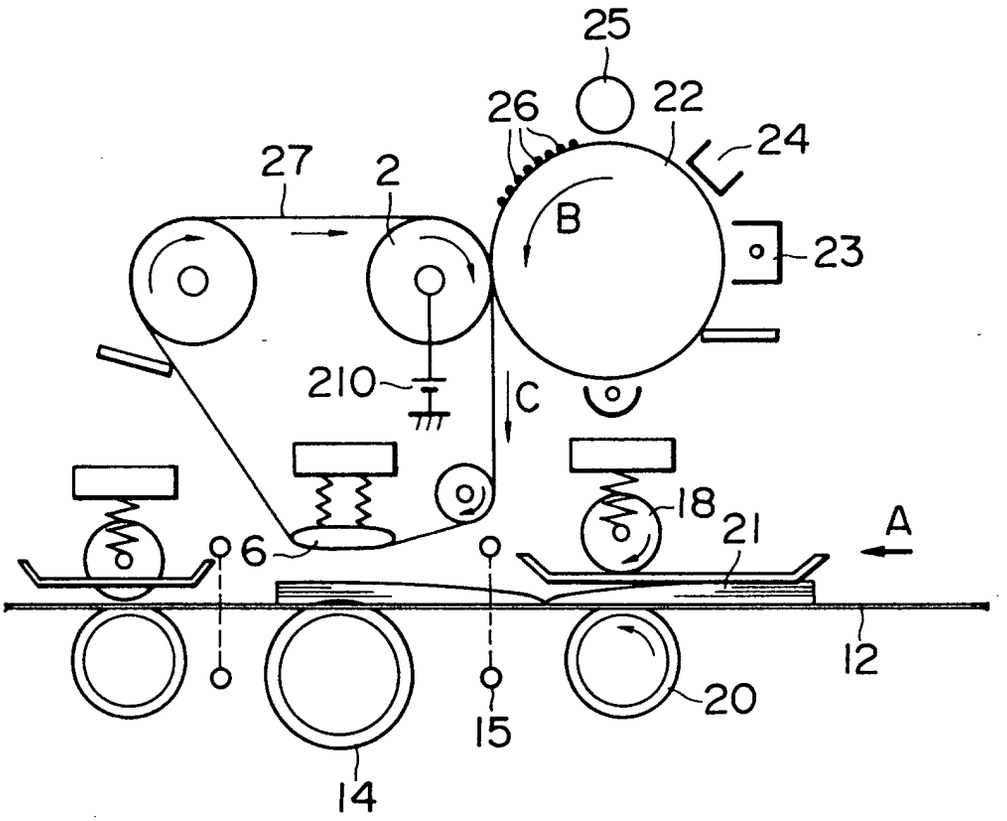

FIG. 3

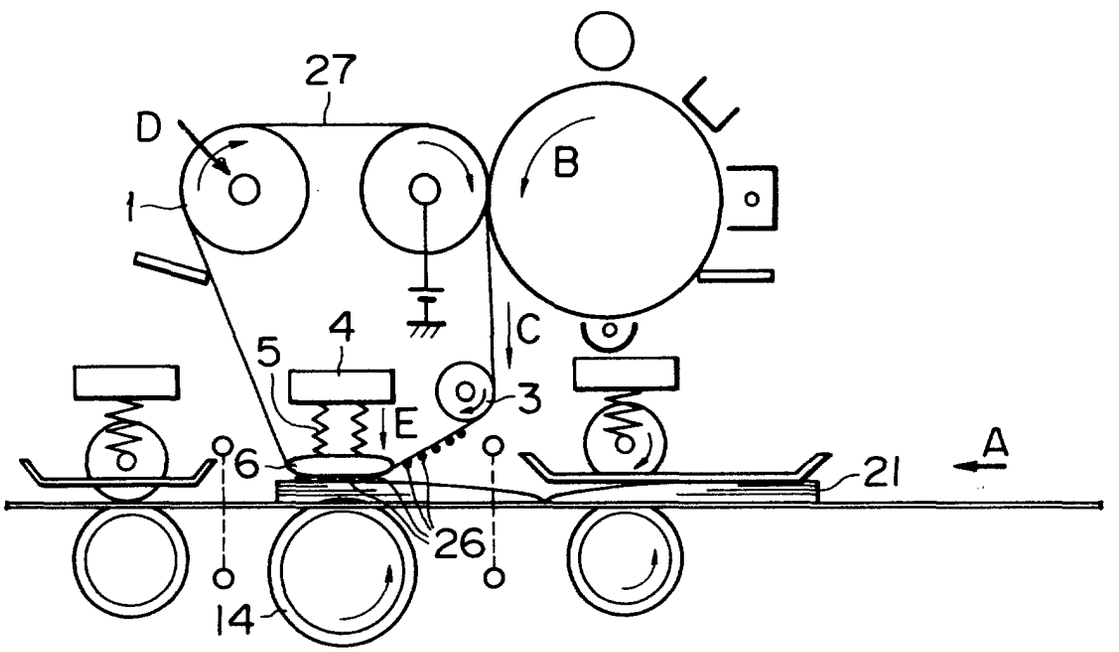

FIG. 4

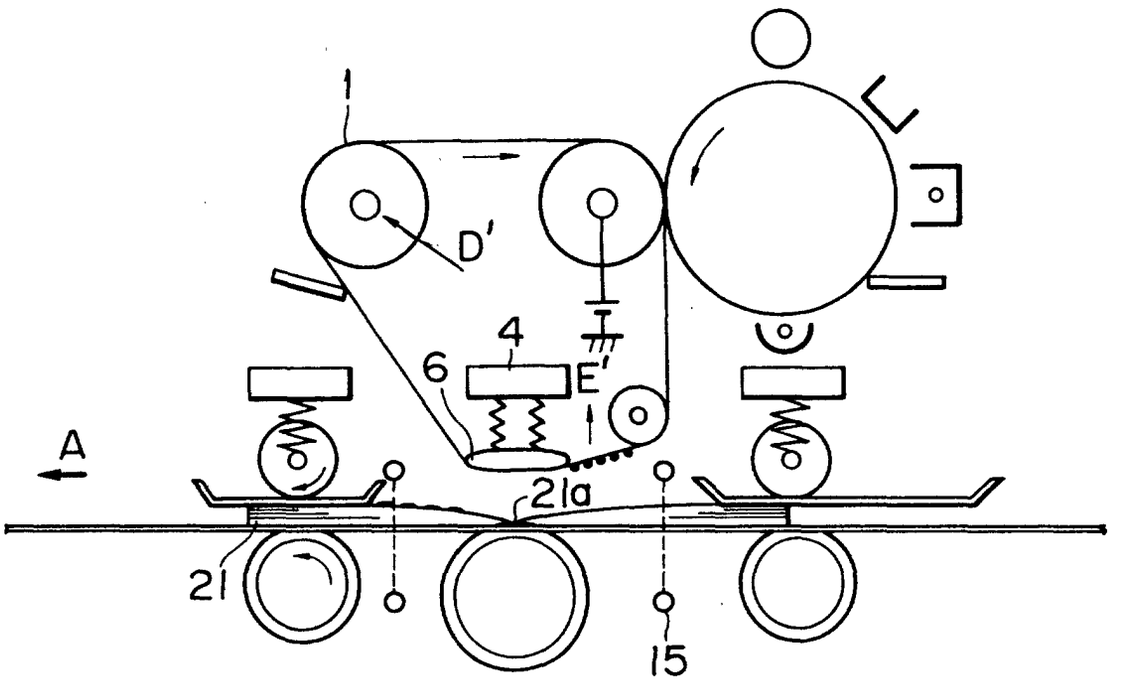

FIG. 5

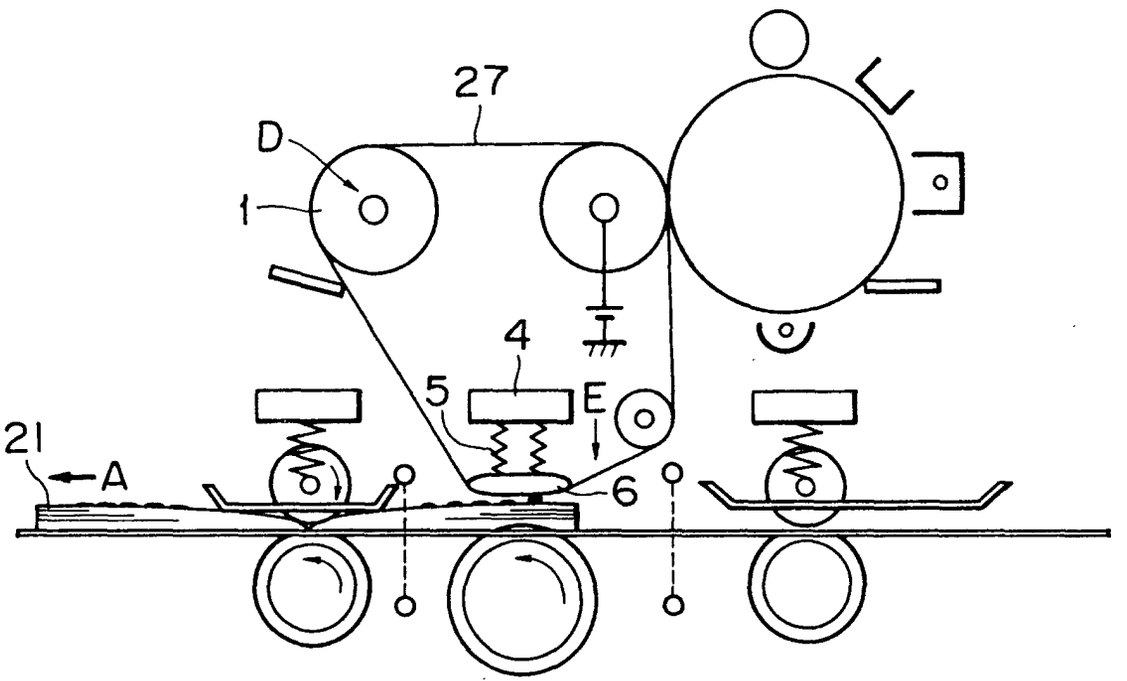

FIG. 6

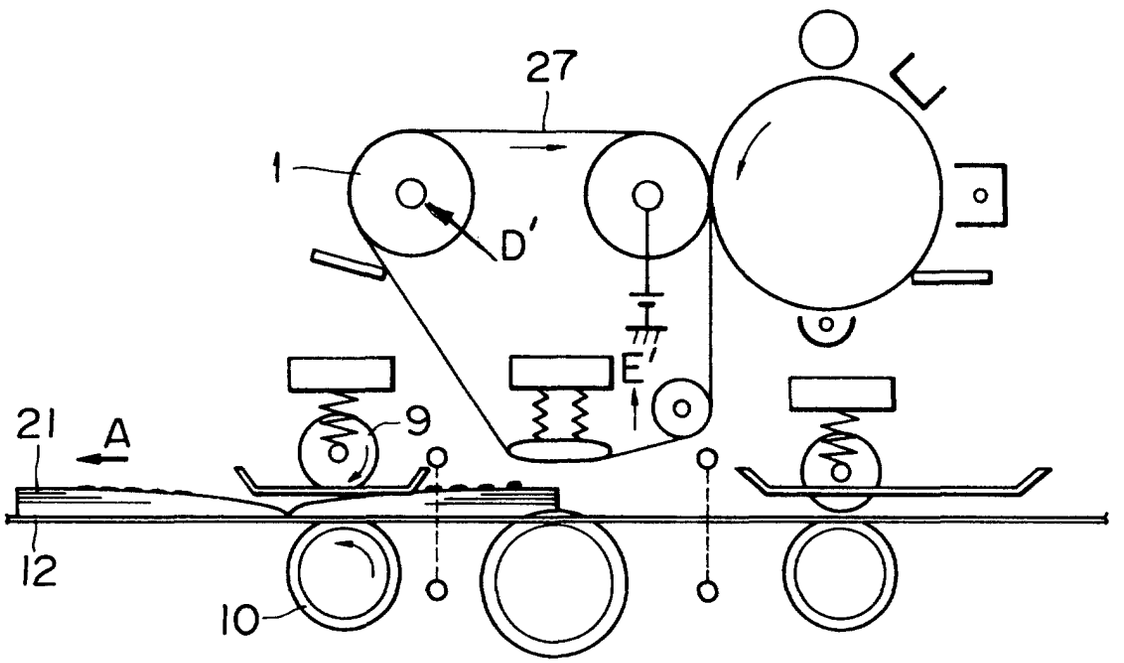

FIG. 7

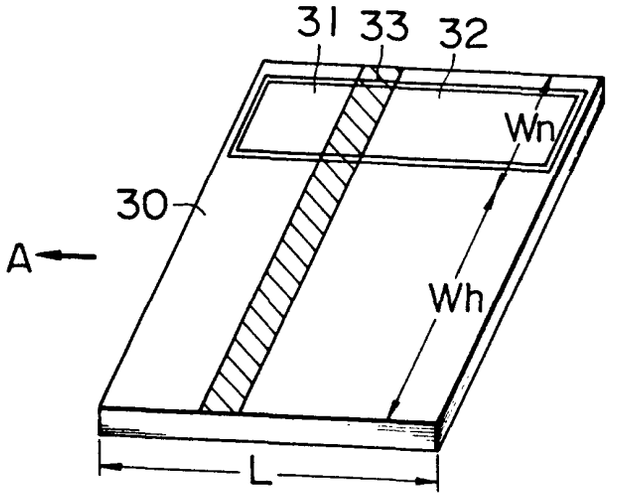

FIG. 8

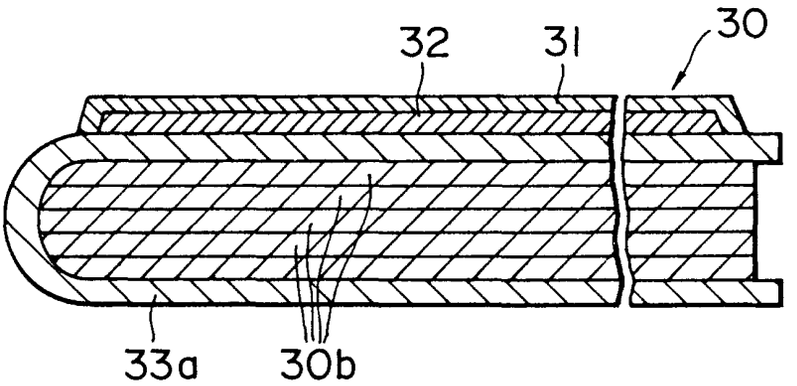

FIG. 9

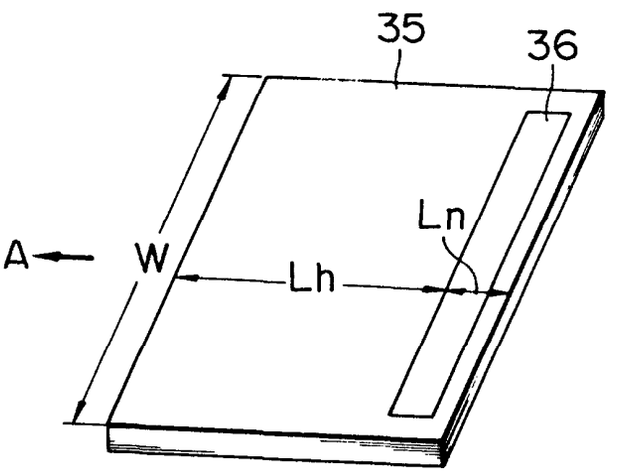

FIG. 10

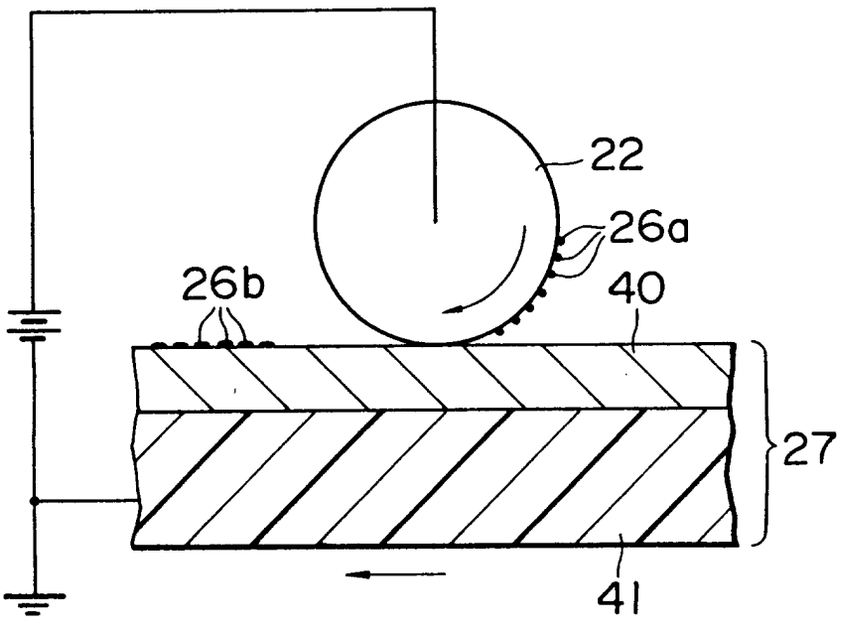

FIG. 11

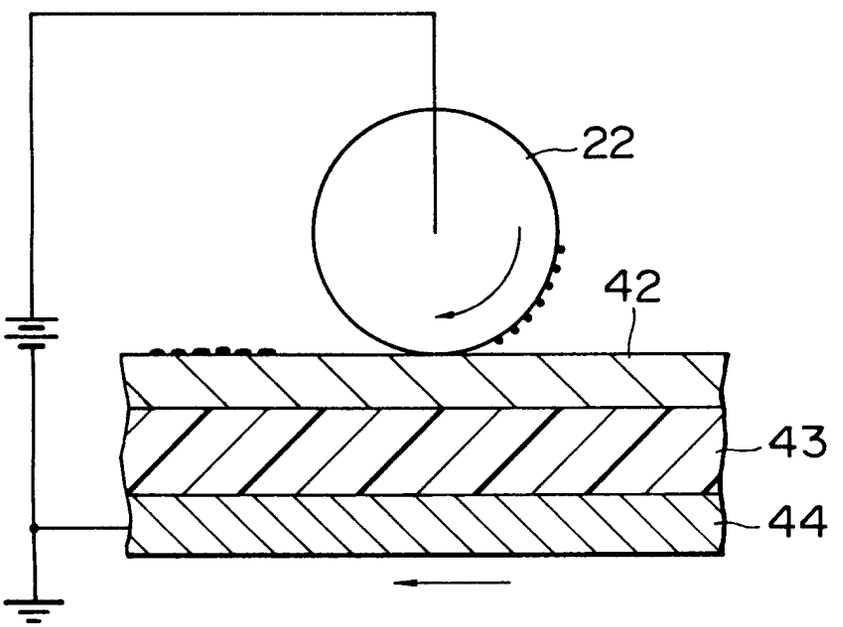

FIG. 12
PRIOR ART

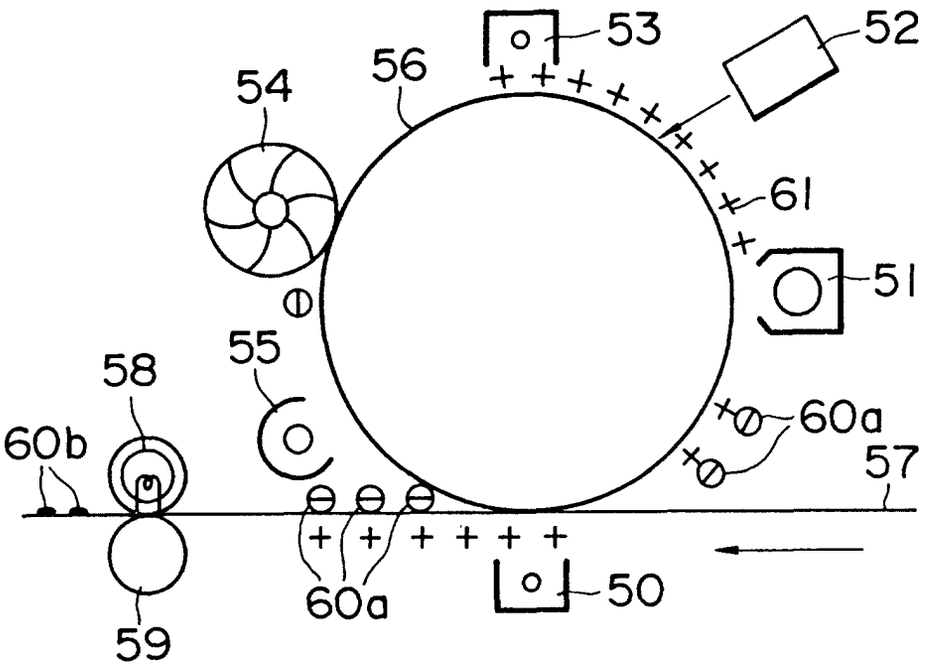

FIG. 13

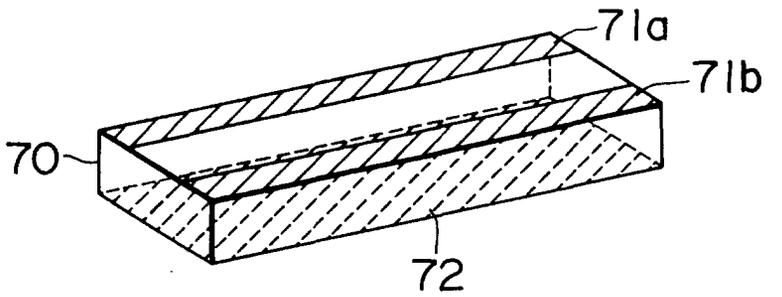

FIG. 14

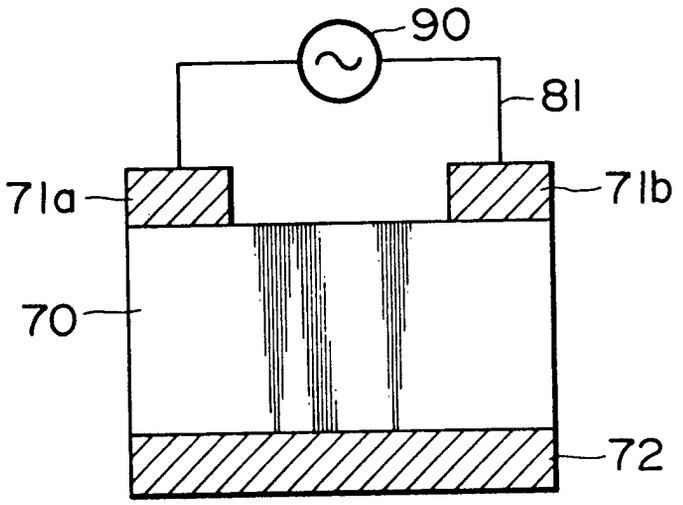

FIG. 15

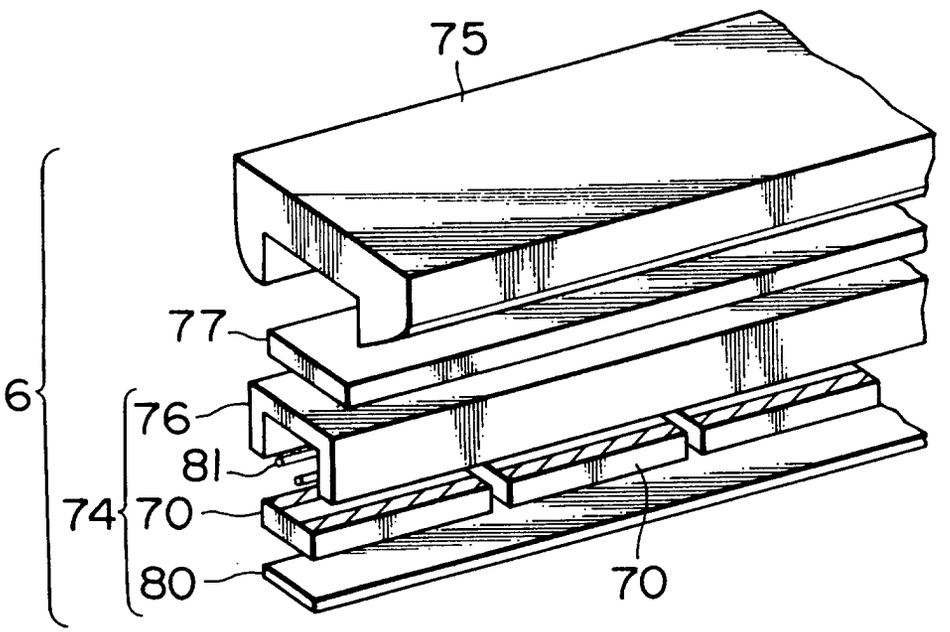

FIG. 16

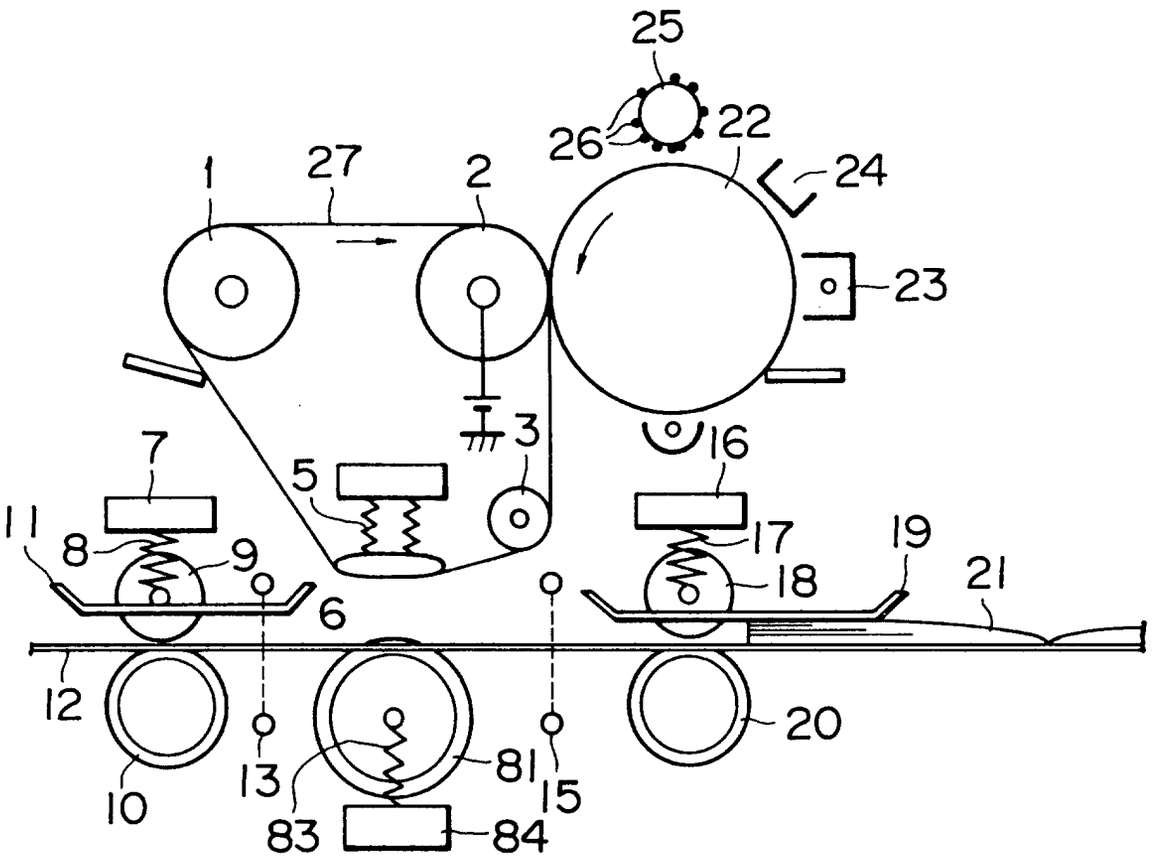

FIG. 17

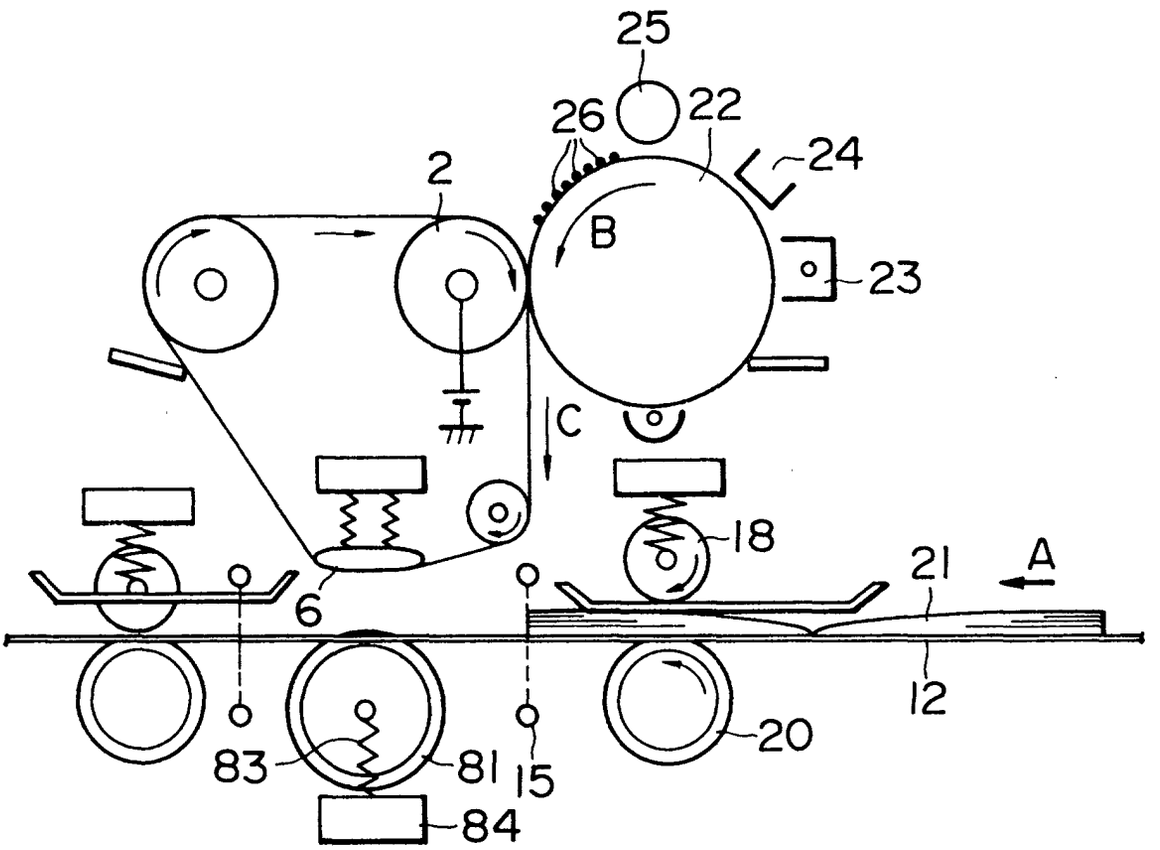

FIG. 18

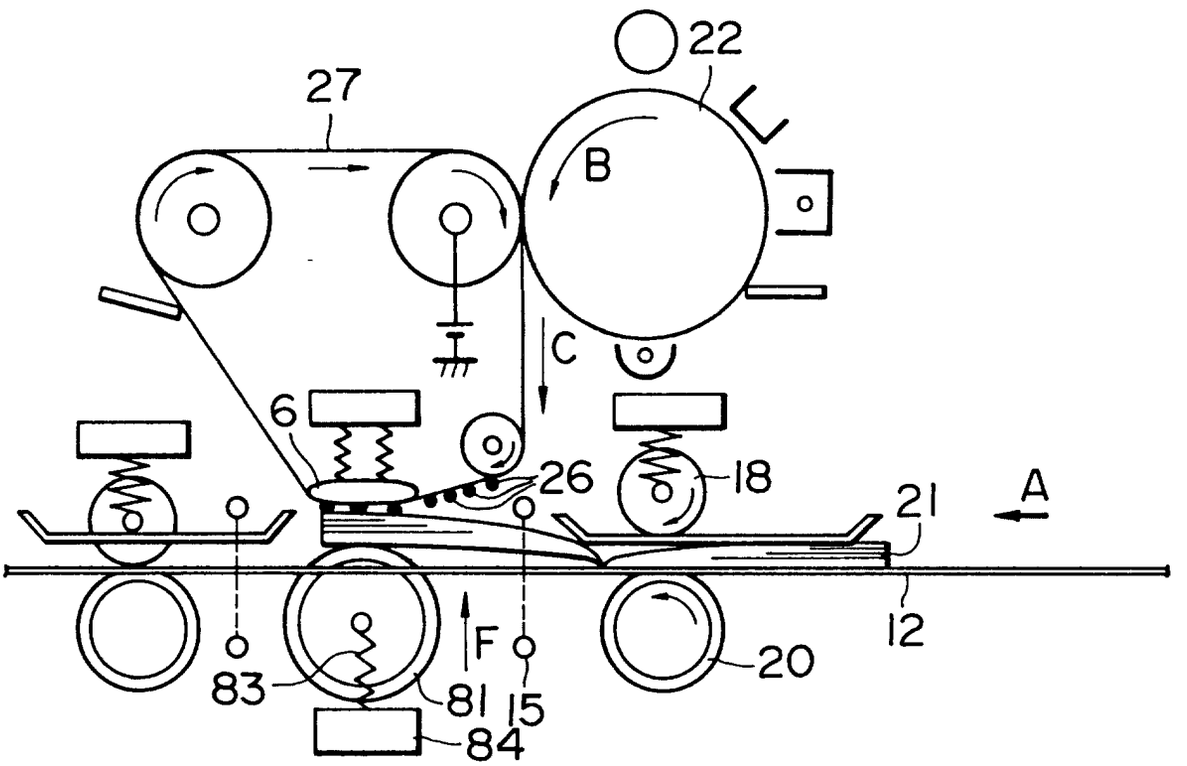

FIG. 19

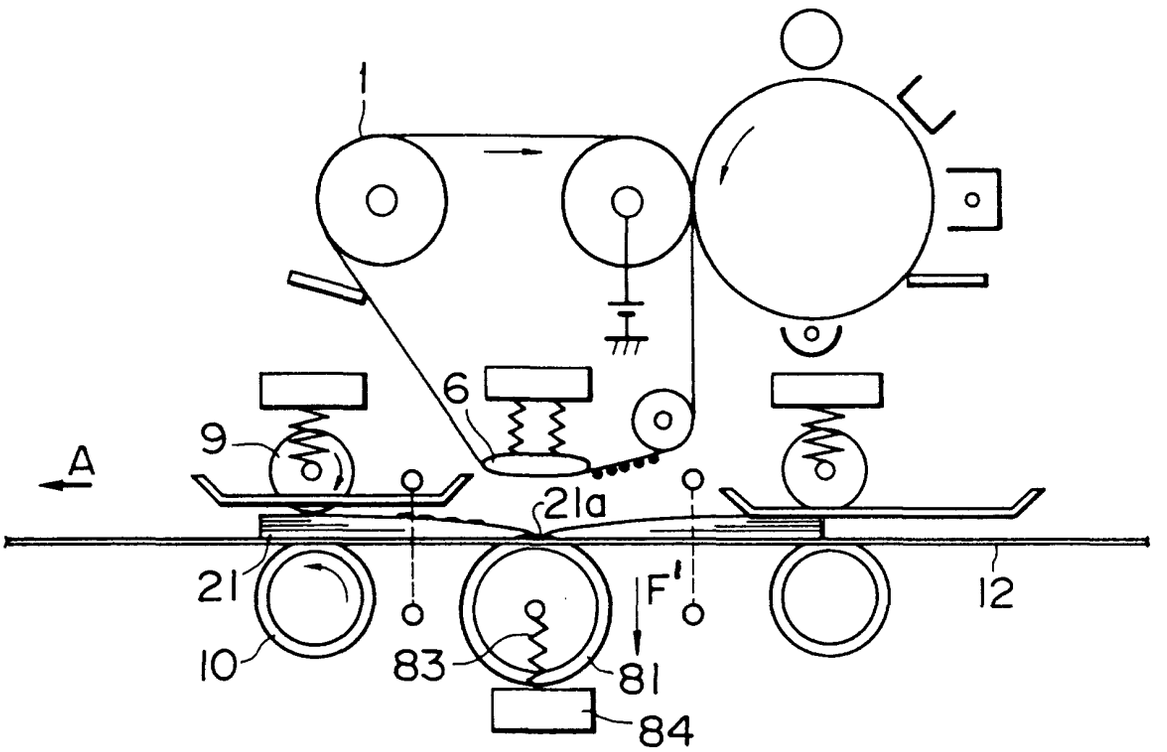

FIG. 20

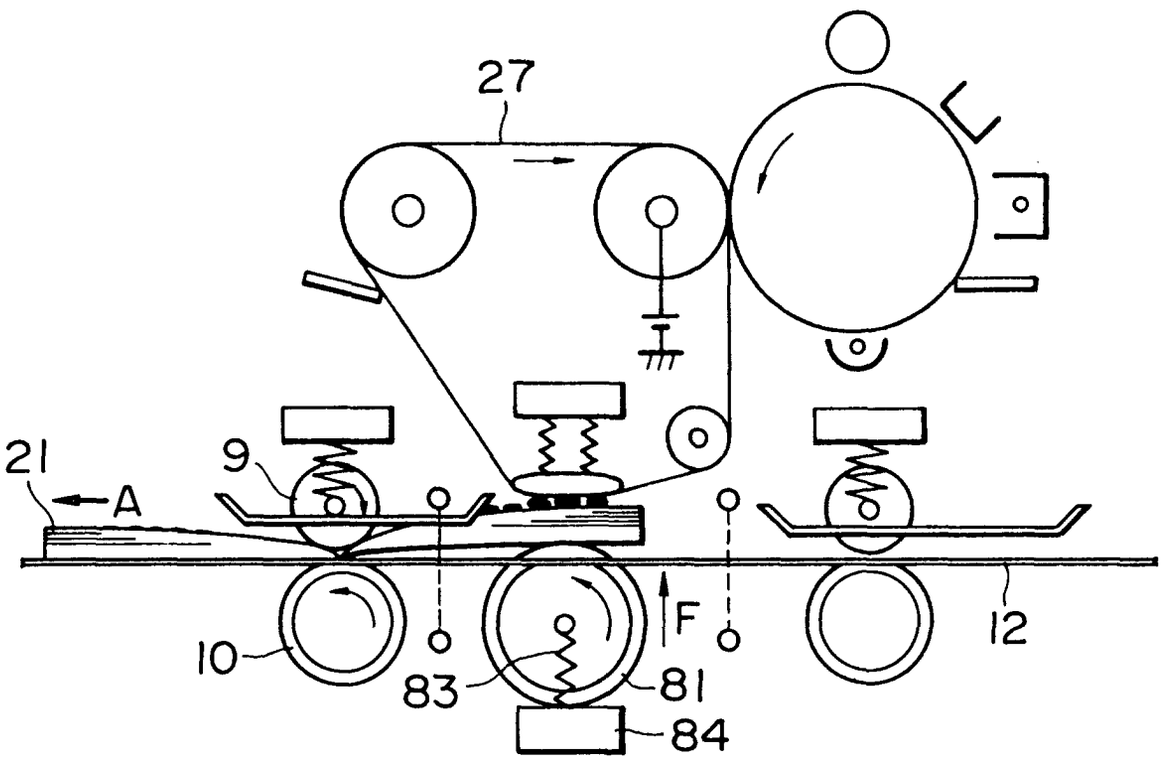

FIG. 21

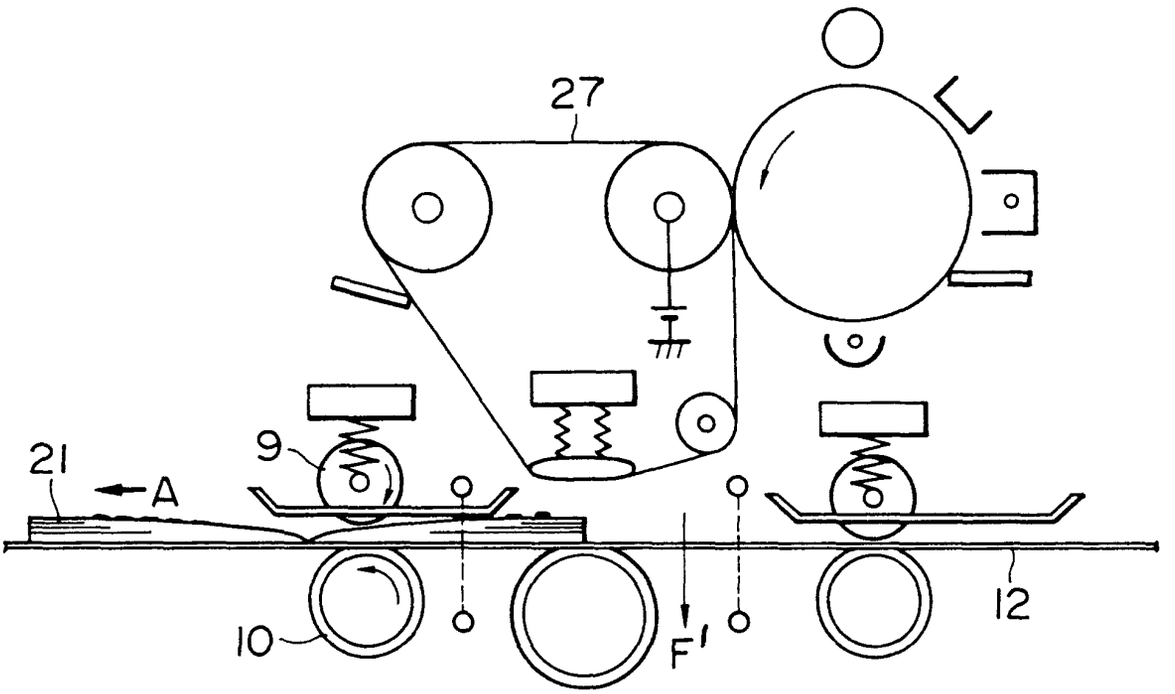

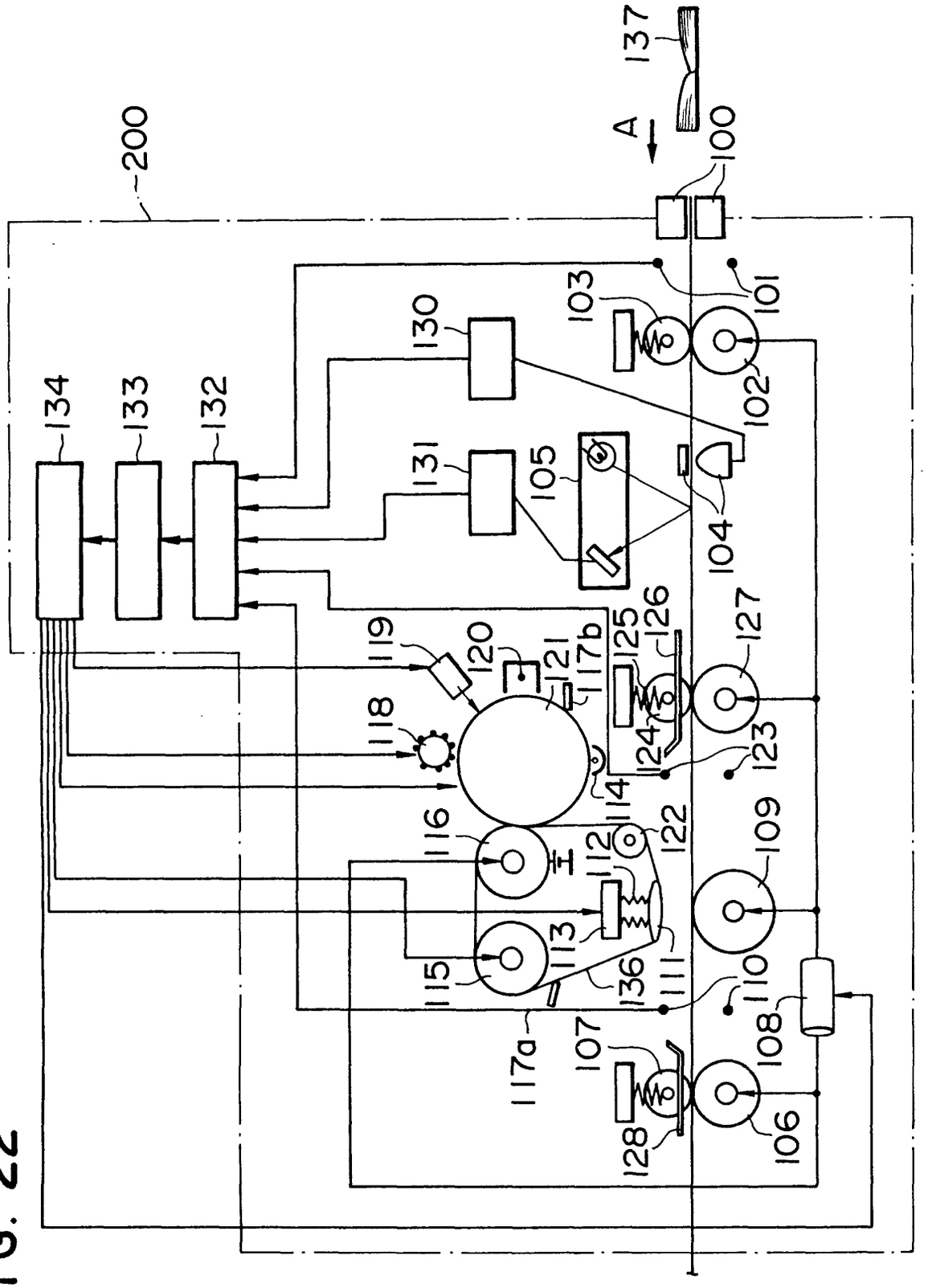
200
137
A
100
101
102
103
104
105
106
107
108
109
110
111
112
113
114
115
116
117a
117b
118
119
120
121
122
123
124
125
126
127
128
130
131
132
133
134
136

FIG. 22

FIG. 23

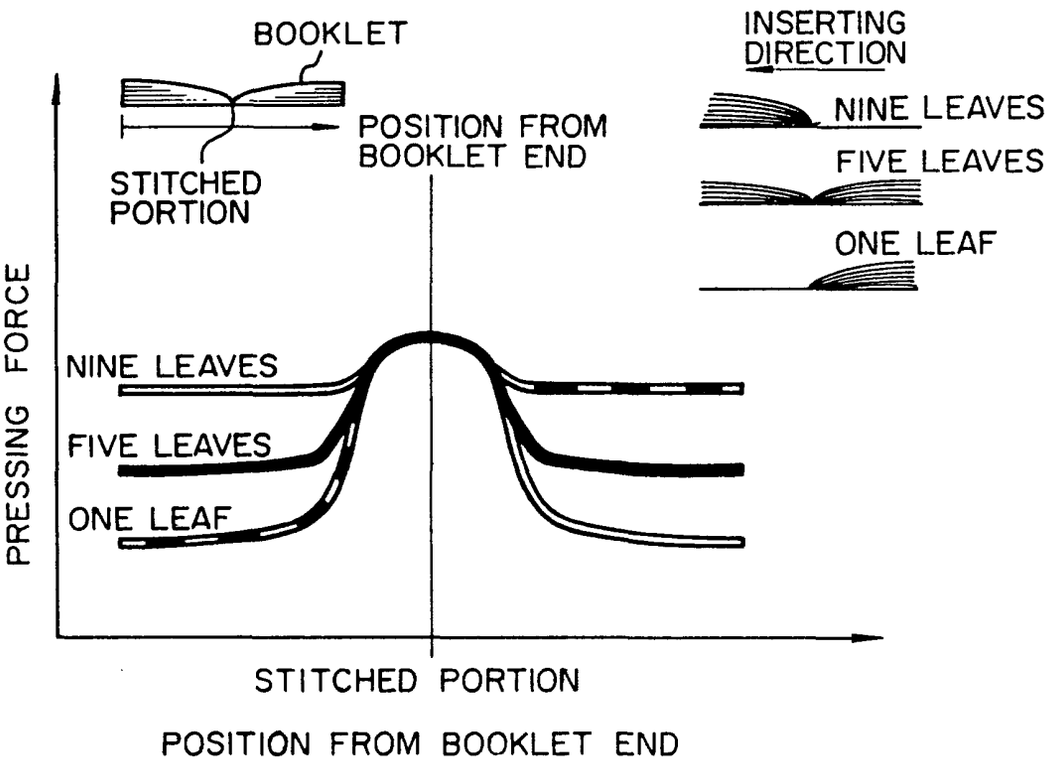
BOOKLET
STITCHED PORTION
POSITION FROM BOOKLET END
INSERTING DIRECTION
NINE LEAVES
FIVE LEAVES
ONE LEAF
PRESSING FORCE
NINE LEAVES
FIVE LEAVES
ONE LEAF
STITCHED PORTION
POSITION FROM BOOKLET END

FIG. 24

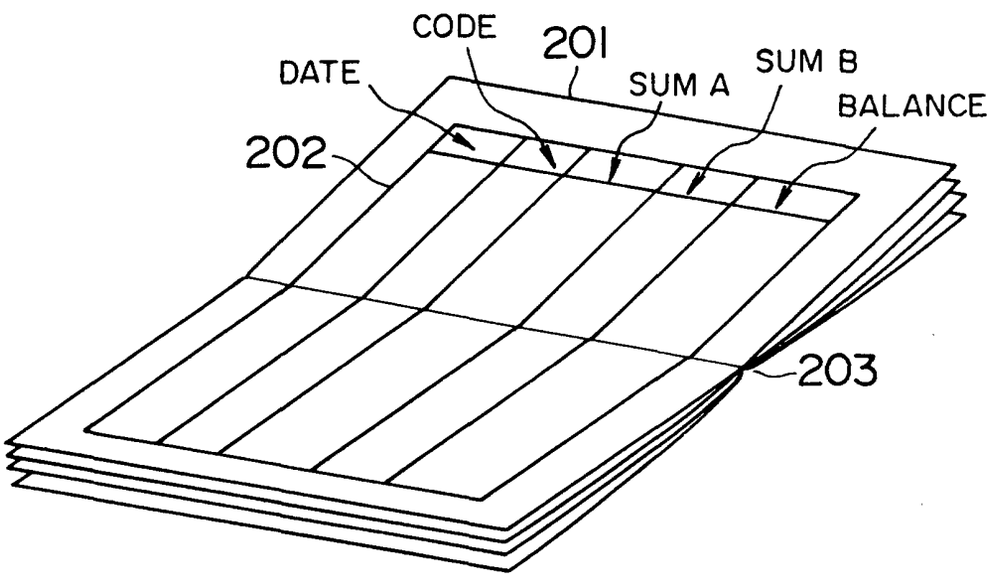
CODE
201
DATE
SUM A
SUM B
BALANCE
202
203