M. G. COLBY.

WAGON JACK.

APPLICATION FILED JAN. 11, 1909.

957,308. Patented May 10, 1910.

Fig. 1.

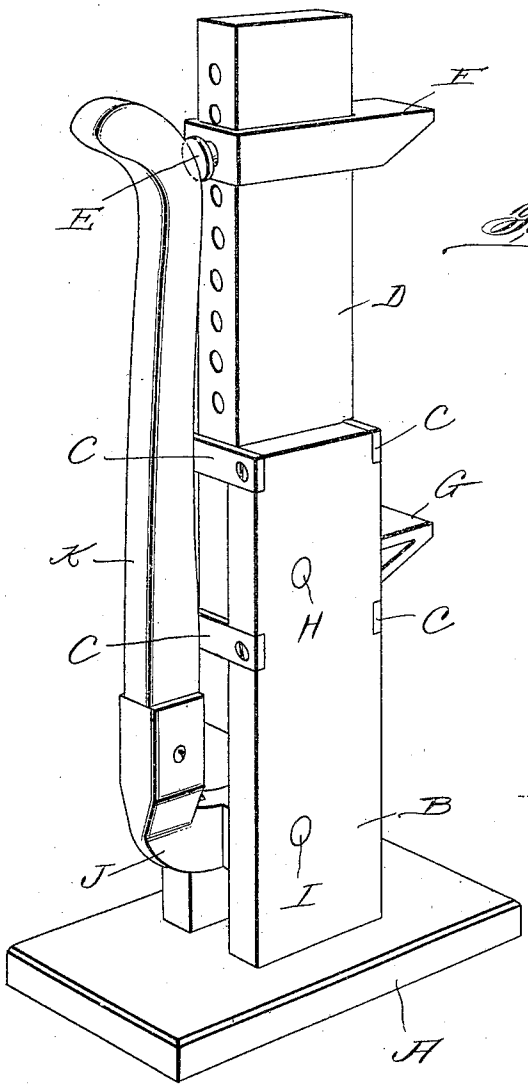

Fig. 2.

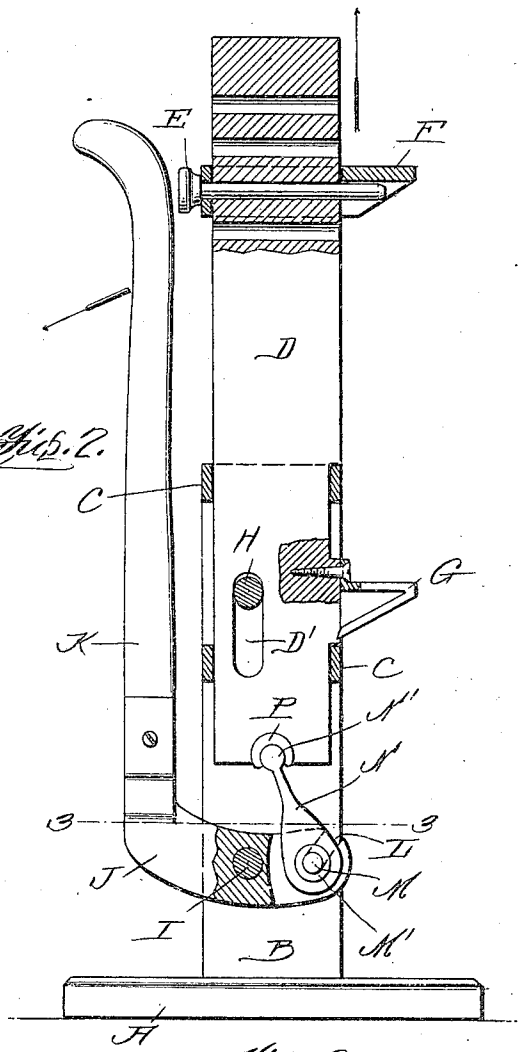

Fig. 3.

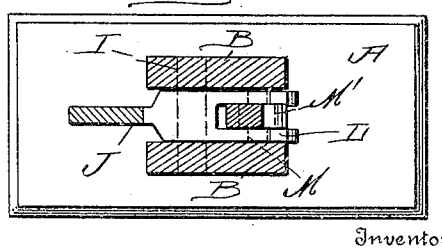

Inventor

M. G. Colby

Witnesses

Oliver W. Holmes

Rea P. Wright

By Ormond Brock

Attorney

ANDREW B. GRAHAM CO., PHOTO-LITHOGRAPHERS, WASHINGTON, D. C.

UNITED STATES PATENT OFFICE.

MADISON G. COLBY, OF FRANKLIN, NEW HAMPSHIRE.

WAGON-JACK.

957,308. Specification of Letters Patent. Patented May 10, 1910.

Application filed January 11, 1909. Serial No. 471,760.

To all whom it may concern:

Be it known that I, MADISON G. COLBY, a citizen of the United States, residing at Franklin, in the county of Merrimack and State of New Hampshire, have invented a new and useful Improvement in Wagon-Jacks, of which the following is a specification.

This invention relates to wagon jacks, the object being to provide a jack which is so constructed that the lifting bar will be automatically held in a raised position when the lever is forced downwardly.

Another object of the invention is to provide the lifting bar with a sliding supporting jaw which can be quickly moved up and down on the same and locked so as to adjust the same for different height axles.

A further object of the invention is to provide novel means for connecting the lever head to the lifting bar in such a manner that when the lever is thrown downwardly the operating link will be thrown over to one side of the vertical center of the fulcrumed pin whereby the lifting bar will be held without the use of any locking means.

A still further object of the invention is to provide a jack which is exceedingly simple and cheap in construction and one which is composed of a few parts which are so arranged and connected that they are not likely to get out of order in use.

With these various objects in view, my invention consists in the novel features of construction, arrangement and combination of parts hereinafter fully described and pointed out in the claim.

In the drawings forming a part of this specification:—Figure 1 is a perspective view of my improved wagon jack. Fig. 2 is a side elevation, one of the standards being removed and the upper portion of the same being shown in section, and Fig. 3 is a section taken on the line 3—3 of Fig. 2.

In carrying out my improved invention, I employ a base A formed of any suitable material having spaced standards B arranged thereon connected together by strips C forming a guideway for the lifting bar D which is slidably mounted between the standards and is provided with a plurality of bores into which is adapted to extend a pin E for locking the supporting jaw F in the desired position. It will be seen by this arrangement that the jaw F can be readily moved up and down on the lifting bar and locked in its adjusted position by the pin. The lifting bar is also provided with a rigid supporting jaw G adjacent its lower end which works between the strips C and forms a stop so as to prevent the lifting bar being raised too far. A longitudinal slot D′ is formed in the lifting bar D adjacent its lower end through which extends a pin H secured in the standards B forming a guide for the lifting bar.

Fulcrumed on a pin I extending transversely through the standards B is a lever head J provided with a lever K for operating the jack. The end of the head is bifurcated as clearly shown and the arms forming the bifurcation are provided with oblique slots L in which are mounted the outwardly projecting stud pins M of a shaft M′ journaled within an opening formed in a lifting link N which is provided with a head N′ mounted within a bushing P secured in a notch formed in the lower end of the lifting bar D and it will be seen that the bushing P is of such a size that it will extend around the circular head N′ far enough so as to lock the same therein. It will be seen that when the lever K is in a raised position the lifting link N is in an oblique position with respect to the fulcrumed point so that when the lever is pressed downwardly the head will be carried upwardly, raising the lifting bar D and throwing the lifting link N to the other side of the fulcrumed point so as to lock the same.

From the foregoing description, it will be seen that I have provided a lifting jack which is so constructed that the lifting bar will be forced upwardly by a lifting link carried by a head in such a manner that when the lever is thrown downwardly it will be carried to the other side of the fulcrumed point which will lock the same.

What I claim is:—

In a wagon jack of the kind described, the combination with a base provided with spaced standards connected together by spaced strips, of a lifting bar mounted between the said standards provided with a notched lower end, said bar being provided with an adjustable jaw and a rigid jaw, said rigid jaw extending out between said strips of the standards, a bushing secured in the notch of the lifting bar, a link pro-

vided with a head mounted in said bushing, a shaft provided with stud pins loosely mounted within an opening formed in said link, and a lever provided with a head pivotally mounted on a shaft between said standards, said head being provided with a bifurcated end, the arms of the bifurcation being provided with oblique slots in which said stud pins are mounted.

MADISON G. COLBY.

Witnesses:
THOMAS F. CLIFFORD,
AGNES L. GAHAGAN.