Sept. 13, 1938. A. KNODEL 2,129,847

WINDING ROLL FILM

Filed Sept. 15, 1933

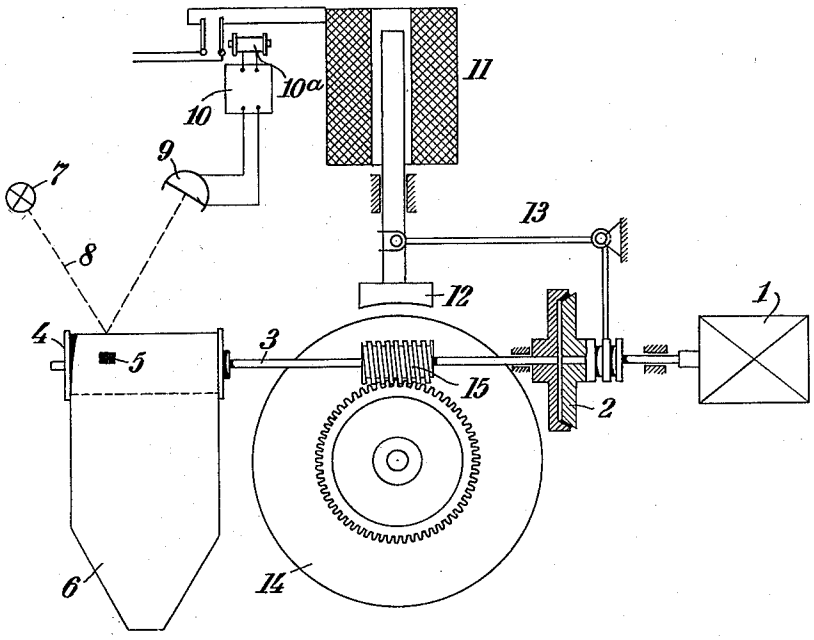

Inventor:
Adolf Knodel,

By Attorney
Philip S. Hopkins.

Patented Sept. 13, 1938 2,129,847

UNITED STATES PATENT OFFICE

2,129,847

WINDING ROLL FILM

Adolf Knodel, Dessau in Anhalt, Germany, assignor to Agfa Ansco Corporation, Binghamton, N. Y., a corporation of New York

Application September 15, 1933, Serial No. 689,675
In Germany September 17, 1932

1 Claim. (Cl. 242—57)

My present invention relates to winding roll films.

One of its objects is an apparatus for winding roll films. Further objects will be seen from the detailed specification following hereinafter, reference being made to the accompanying drawing which represents diagrammatically an apparatus according to my invention.

In winding photographic roll films there is at first wound a certain length of the protective paper strip on the spool, then the motion of the spool is stopped, one of the ends of the film strip is inserted under the last paper coil, the spool is again set in motion and the film strip is wound up together with the protective paper strip. After the whole film strip is wound up, the motion of the spool is again stopped, the second end of the film strip is stuck to the protective paper strip, and finally the rest of the protective paper strip is wound up. It is known to conduct this sucession of operations automatically or semi-automatically by provision of a step pulley or the like that allows of stopping the means driving the spool after the same has made the required number of turns. The driving mechanism may be released either by hand or automatically.

According to this invention the control of the roll-film winding machine is not effected by a step pulley or the like means mounted in the machine itself, but by marks provided on the protective paper strip to be wound. This allows of winding on one and the same machine, film strips of different lengths without any change of the machine, the stopping and starting of the machine depending only on the marks provided on the protective paper strip.

It would appear obvious to give the marks to be provided on the protective paper strip the form of notches or perforations which in known manner are scanned by means of a lever. This procedure, however, is not advisable as the light-safety of the film-roll would be greatly impaired.

According to this invention the marks are printed on the protective paper strip in the form of characters having a color differing from that of the protective paper strip. These marks are scanned by means of a photoelectric cell which transforms the variations of the light intensity into current impulses which by way of a relay act upon the driving means of the machine for winding the roll film.

I will now describe my invention with reference to the accompanying drawing.

The spindle 3 is driven by the motor 1 by way of the detachable coupling 2. On the spool 4 which is put on the spindle 3, the paper 6 bearing the printed mark 5 is wound together with a film strip. The bundle of rays 8 emanating from the source of light 7 is reflected on the paper strip and thrown on the photoelectric cell 9. The current thereby produced is amplified at 10 and is led to an electromagnet 11, the keeper of which on the one hand controls a stopper 12 (f. i. a stopper gripping frictionally, a ratchet tooth or a ratchet controlled electromagnetically) and on the other hand, by way of the lever 13, controls the coupling 2. If the current produced by the photoelectric cell is not sufficient for controlling the magnet keeper, a relay 10a may be combined with the amplifier at 10 so that the amplified current of the photoelectric tube controls the relay 10a which latter controls the supply of a current sufficiently strong to actuate the electromagnet 11. As long as the light rays fall upon the ordinary paper-strip, the magnet is excited and the coupling 2 is maintained in its operative position, that is to say, it is connected with the spindle 3. Thus the winding spindle is coupled with the running motor and the paper is wound up. If, on the contrary, the light rays fall upon a black printed mark, the intensity of the reflected ray is largely reduced. The keeper of the magnet falls, whereby the coupling is interrupted and the brake shoe 12, in co-operation with the disk 14 and the gear 15, will immediately stop the winding spindle.

In order to avoid the application of marks on the rear side of the backing paper which comes into touch with the light sensitive layer of the film, the marks may also be applied to a paper strip which is wound on a spool together with the roll film, or the apparatus may be provided with a device, for instance, a drum bearing the marks.

The source of light naturally emanates light of the required color, for instance, red light, when winding orthochromatic film, or green when winding panchromatic film.

What I claim is:

An apparatus for winding roll film which comprises in combination a spindle, means for driving said spindle, a clutch connecting one end of said spindle with said driving means, a spool put on the other end of said spindle, a paper strip secured to said spool and bearing marks, a disk, a gearing rotatably connecting said spindle with said disk, an electromagnet, a magnet keeper extending with one end into said electromagnet, the other end being provided with a brake shoe, a lever connecting said keeper with said clutch,

a source of light projecting a beam of light on said paper strip, a photoelectric tube receiving said beam of light reflected by said paper strip, an amplifier connected with said photoelectric tube amplifying the current produced by said phototelectric tube, a relay controlling the supply of a current to said electromagnet, said paper strip controlling by said beam of light said photoelectric tube and in consequence said relay and said electromagnet, so that said keeper is moved into the interior of said electromagnet when said beam of light strikes said paper strip and falls down when said beam of light strikes said marks thus bringing the clutch into its inoperative position and the brake shoe into its operative position and vice versa.

ADOLF KNODEL.