(No Model.)

# O. C. FITTS.

## ROTARY ENGINE.

No. 590,883. Patented Sept. 28, 1897.

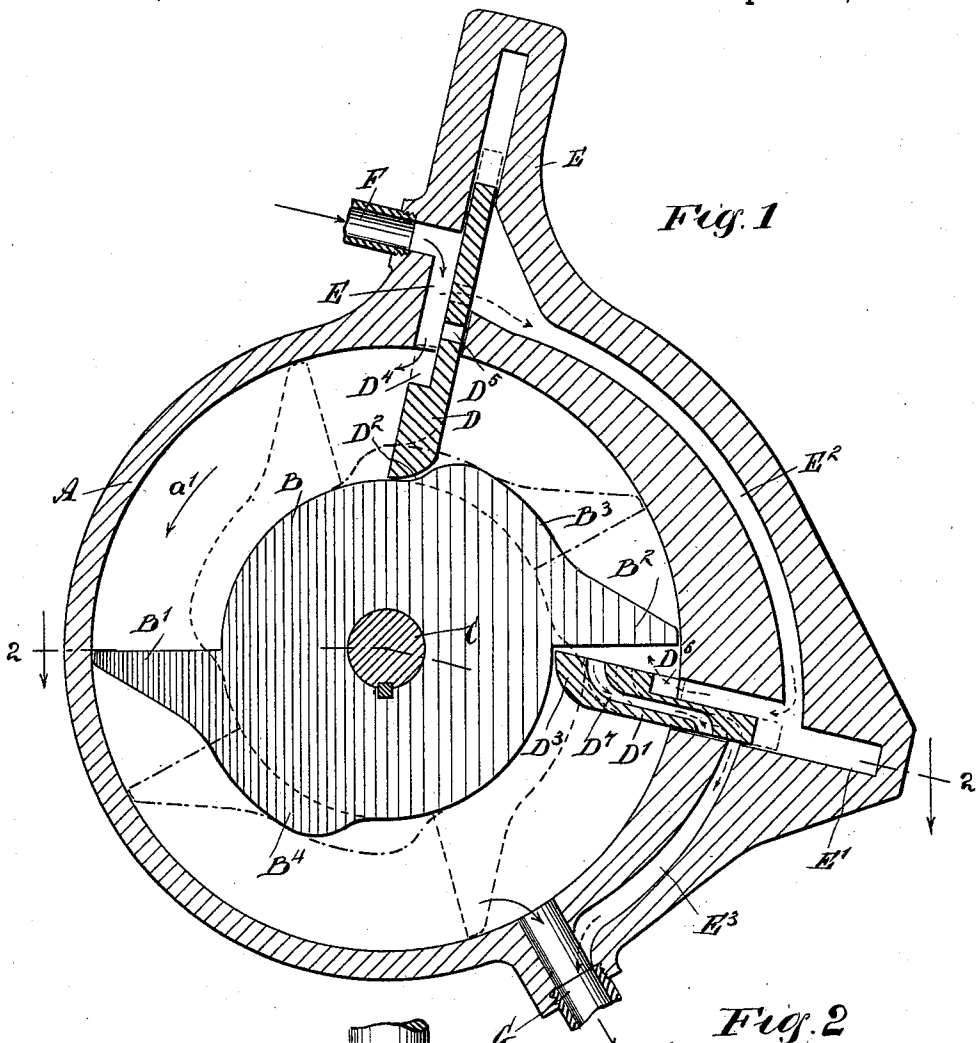


Fig. 1

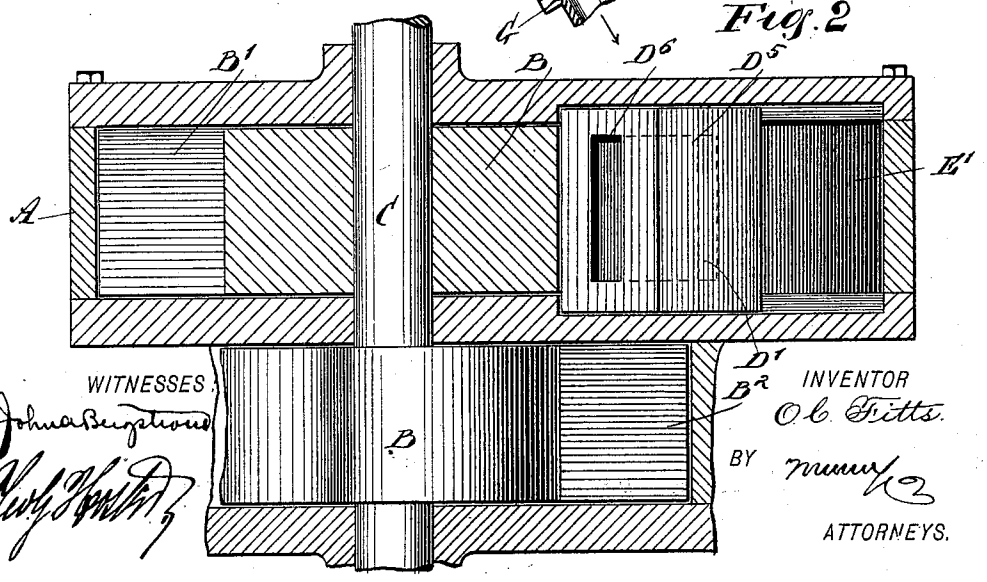


Fig. 2

WITNESSES:

John A. Bergstrom

Geo. G. Hoster

INVENTOR

O. C. Fitts.

BY Munn & Co

ATTORNEYS.

THE NORRIS PETERS CO., PHOTO-LITHO., WASHINGTON, D. C.

# UNITED STATES PATENT OFFICE.

OLIVER C. FITTS, OF CARPENTERSVILLE, ILLINOIS.

## ROTARY ENGINE.

SPECIFICATION forming part of Letters Patent No. 590,883, dated September 28, 1897.

Application filed April 26, 1897. Serial No. 633,958. (No model.)

*To all whom it may concern:*

Be it known that I, OLIVER C. FITTS, of Carpentersville, in the county of Kane and State of Illinois, have invented a new and Improved Rotary Engine, of which the following is a full, clear, and exact description.

The object of the invention is to provide a new and improved rotary engine which is simple and durable in construction, very effective in operation, and arranged to utilize the power under full boiler-pressure for each complete revolution of the piston, at the same time using the steam expansively during about one-fifth revolution of the piston.

The invention consists principally of a cylinder provided with valve-chests connected with each other and with a steam-supply, a piston mounted to turn in the said cylinder and having piston-heads, and abutment-valves fitted to slide in the said valve-chests and in and out of the said cylinder, one of the abutments being provided with a port adapted to register with the connection leading to the other valve-chest to admit steam to the latter after the first valve has moved into a cut-off position.

The invention also consists of certain parts and details and combinations of the same, as will be fully described hereinafter and then pointed out in the claims.

Reference is to be had to the accompanying drawings, forming a part of this specification, in which similar characters of reference indicate corresponding parts in both the figures.

Figure 1 is a sectional side elevation of the improvement, and Fig. 2 is a sectional plan view of the same on the line 2 2 of Fig. 1.

The improved rotary engine is provided with one or more cylinders A, in each of which is mounted to turn a piston B, secured to the main driving-shaft C, mounted to turn in suitable bearings in the heads of the cylinders. The piston B in each cylinder is provided with diametrically oppositely arranged piston-heads B′ and $B^2$, terminating at their inclined backs in the cut-off offsets $B^3$ and $B^4$, respectively, leading to the peripheral surface of the piston, the offsets and backs of the piston-heads being arranged to engage the inner curved ends $D^2$ and $D^3$ of the abutment-valves D and D′, respectively, fitted to slide radially in the valve-chests E and E′, respectively, formed on the cylinder A. The said valve-chests E and E′ are connected with each other by a channel $E^2$ and the valve-chest E is connected with the steam-supply pipe F, leading from the boiler or other source of steam-supply.

The front face of the abutment-valve D is provided with a cut-out portion $D^4$ for admitting steam from the steam-chest E to the interior of the cylinder A at the time the inner end of the said abutment is in contact with the peripheral surface of the piston B, as shown in Fig. 1. In the abutment-valve D is also formed a port $D^5$, adapted to register with the channel $E^2$ at the time the said abutment-valve is pushed outwardly on traveling over the offset $B^3$ or $B^4$. When this takes place, the cut-out portion $D^4$ is disconnected from the cylinder, so that steam cannot pass to the same by way of the abutment-valve D, but steam can now pass from the chest E through the channel $E^2$ into the other valve-chest E′, from which the steam can pass by the cut-out portion $D^6$ in the abutment-valve D′ to the interior of the cylinder. In the abutment-valve D′ is also formed a port $D^7$, leading from the front face of the said abutment-valve to the rear face thereof to connect with a channel $E^3$, opening into the exhaust G, also connected with the interior of the cylinder, as illustrated in Fig. 1.

The operation is as follows: When the several parts are in the position as indicated in Fig. 1, the live steam then passes from the pipe F and chest E into the cylinder by way of the cut-out portion $D^4$, so that the steam is confined between the piston-head B′ and the abutment D to press on the former and rotate the piston in the direction of the arrow *a′*. During this time the connection between the chest E and E′ is cut off; but when the offset $B^3$ engages the inner end of the abutment-valve D the latter is then pushed outward and steam is cut off at this point from the cylinder, while connection is made between the valve-chest E and the chest E′ to deliver steam by way of the valve D′ to the cylinder between the abutment-valve D′ and the piston-head $B^2$. Thus another impulse is given to the piston by full pressure of steam in the direction of the arrow *a′*. The steam between the abutment D and piston-head B′ acts ex-

pansively until the abutment D has traveled up the back of the piston-head $B^2$ and dropped down in the front thereof, as indicated in dotted lines in Fig. 1, the other piston-head B′ soon passing the exhaust G to allow the steam in front of the piston-head B′ to escape to the outer air. When the second valve D′ travels up the offset $B^2$, then the live steam is cut off to the cylinder by this valve, and the port $D^7$ is moved in register with the channel $E^3$, so that the steam in front of the said abutment-valve can now escape to the exhaust-pipe G and to the outer air, it being, however, understood that the steam previous to its escape at this valve has acted expansively on the piston-head. The arrangement of the offsets $B^3$ and $B^4$ is such that the steam acts expansively during about one-fifth revolution of the piston; but a full pressure of steam is always had on either one of the two piston-rods B′ or $B^2$ during each full revolution of the piston. It is understood that instead of steam any other suitable motive agent—such as compressed air, &c.—may be used.

Having thus fully described my invention, I claim as new and desire to secure by Letters Patent—

1. A rotary engine comprising a cylinder provided with valve-chests connected with each other and with a steam-supply, a piston mounted to turn in the said cylinder and having piston-heads, and abutment-valves fitted to slide in the said valve-chest and in and out of the said cylinder, one of the valves being provided with a port adapted to register with the connection leading to the other valve-chest, to admit steam to the latter after the first valve has moved into a cut-off position, substantially as shown and described.

2. A rotary engine comprising a cylinder provided with valve-chests connected with each other and with a steam-supply, a piston mounted to turn in the said cylinder and having piston-heads, and abutment-valves fitted to slide in the said valve-chest and in and out of the said cylinder, one of the valves being provided with a port adapted to register with the connection leading to the other valve-chest, to admit steam to the latter after the first valve has moved into a cut-off position, the other abutment-valve being also provided with a port for connecting the interior of the cylinder with the exhaust, substantially as shown and described.

3. A rotary engine comprising a cylinder provided with valve-chests standing approximately at right angles one to the other, one of the chests being connected with a steam-supply and the other with the exhaust, the chests being also connected with each other, a piston mounted to turn and having diametrically oppositely arranged piston-heads terminating at their inclined backs with offsets on the peripheral surfaces of the piston, and abutment-valves fitted to slide in the said valve-chests and in and out of the said cylinders, each of the valves having a cut-out portion for admitting steam to the cylinder, and one of the valves having a port for establishing connection between this valve-chest and a connection leading to the other valve-chest, the other abutment-valve being provided with a port for connecting the interior of the cylinder with the exhaust, substantially as shown and described.

OLIVER C. FITTS.

Witnesses:
FRANK A. JOHNSON,
EUGENE WILLIAMS.