July 17, 1956 D. COHN 2,754,621

LEG MOUNTING STRUCTURE FOR A WALKING DOLL

Filed Aug. 13, 1952

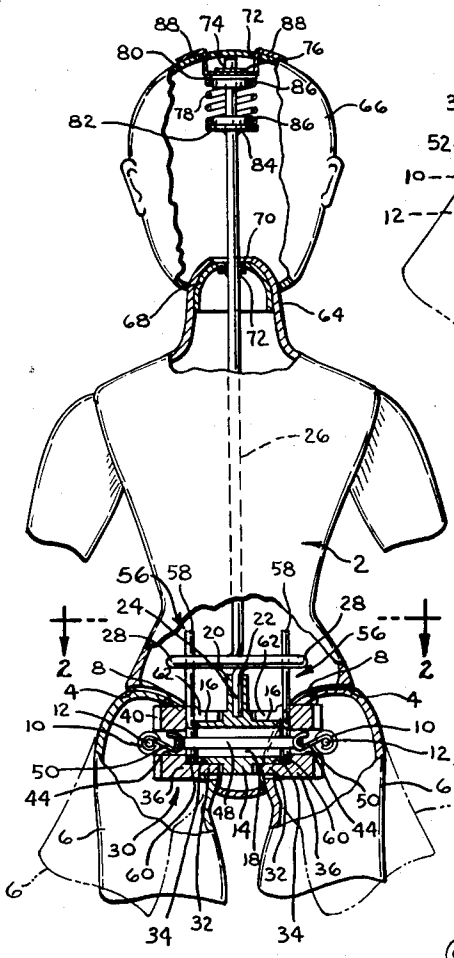

FIG. 1

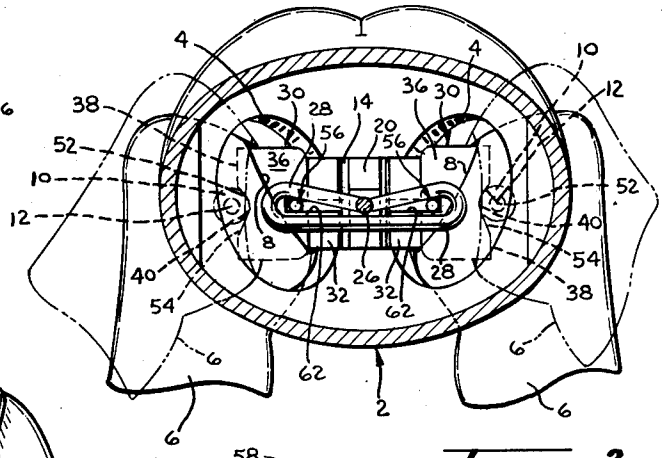

FIG. 2

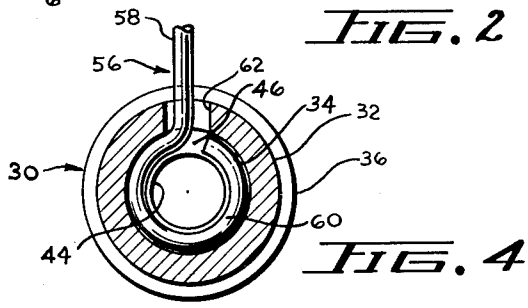

FIG. 4

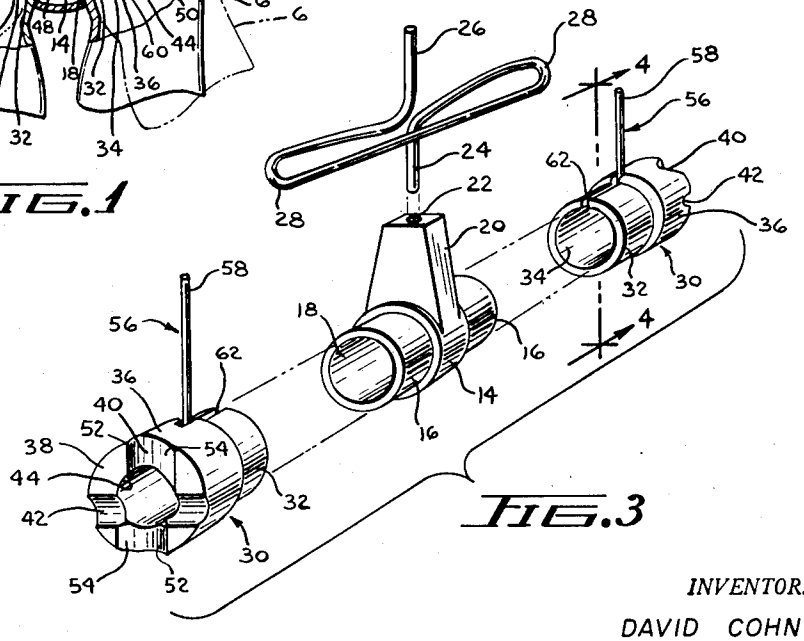

FIG. 3

INVENTOR.
DAVID COHN
BY James and Franklin
ATTORNEY

United States Patent Office 2,754,621 Patented July 17, 1956

2,754,621

LEG MOUNTING STRUCTURE FOR A WALKING DOLL

David Cohn, Brooklyn, N. Y., assignor to Model Plastics Corporation, White Plains, N. Y., a corporation of New York

Application August 13, 1952, Serial No. 304,146

8 Claims. (Cl. 46—149)

The present invention relates to an inexpensive and readily assemblable structure for mounting the legs of a walking doll so that the legs will move in synchronized manner when the doll is walked, may be moved to sitting position when desired, and will have a maximum degree of freedom of movement in a lateral or spreading direction when in either of said positions.

Various mechanisms have been devised in the past for producing a walking doll, that is to say, a doll in which the legs are interconnected by mechanism effective to cause one leg to swing rearwardly when the other leg is moving forwardly, thus permitting the doll to be grasped by a hand and pulled over a floor or supporting surface, the legs moving to simulate walking. In some structures of the prior art the head of the doll is operatively connected to the leg-moving mechanism so that the head will swing from side to side in synchronized relation to the walking.

It is most desirable that the legs be releasably connected to the mechanism used to synchronize the walking movements thereof so that the legs can be moved to a sitting position when desired, thus enabling the doll to be self-supporting when placed on a floor or table in that position. It is important in this regard that the legs should be spreadable in order to provide lateral as well as frontal support for the doll body.

The present invention has for its object the production of a mounting arrangement for dolls' legs in a walking doll or the like in which the legs are readily movable between standing or walking and sitting positions, in which a definite frontal angular relationship between legs and body is provided for each of said positions, in which the legs are spreadable to an appreciable degree no matter in which position they may be, in which standard hollow doll bodies and legs may be employed, and in which the leg moving mechanism is inexpensive, and readily manufactured, assembled, mounted in position in the doll body and operatively connected to the doll legs.

The leg moving mechanism on which the legs are mounted is provided with a pair of movable members interconnected so as to swing in opposite directions and thus impart walking movement to the legs operatively connected thereto. These moving members and the legs are provided with cooperating and interengaging mounting means comprising a pin or other shaft-like element on one of the legs or moving members and a pair of angularly oriented grooves on the other, the pin being receivable in one or the other of the grooves depending upon whether the leg is to be in standing or sitting position. By reason of the pin and groove interconnection, the leg, whether in standing or sitting position, is pivotal about the pin as an axis, thus permitting the legs to be spread to any desired degree. Since two grooves are provided, one corresponding to the standing position of the leg and the other corresponding to the sitting position thereof, the angular relationship of the legs to the body in each of those positions is definitely fixed and the degree to which the legs may be spread is independent thereof.

To the accomplishment of the above, and to such other objects as may hereinafter appear, the present invention relates to the structure for mounting and interconnecting the legs of a walking doll as defined in the following claims and as described in this specification taken together with the accompanying drawings in which:

Fig. 1 is a front elevational view, partially broken away and cross sectioned, of a walking doll in which the present invention is incorporated;

Fig. 2 is a cross sectional view thereof taken along the line 2—2 of Fig. 1;

Fig. 3 is an exploded three-quarter perspective view of the operative parts of the leg mounting and moving mechanism; and

Fig. 4 is a cross sectional view of one of the movable members shown in Fig. 3.

The doll comprises a body 2 of conventional construction having apertures 4 at the lower end thereof through which the upper portions of legs 6 pass into the interior of the hollow body 2, the cooperating surfaces of the apertures 4 and the legs 6 being substantially spherical so as to permit the proper degree of movement of the legs 6 relative to the body 2. The legs 6 themselves are hollow, as is customary, and have apertures 8 formed therein through which access to the interior of the legs 6 is possible. Tubular projections 10 extend inwardly from the front and rear walls of the legs 6 opposite the apertures 8, and a pin 12 is mounted in those projections so as to extend across the interior of the leg, the projections 10 and pin 12, as will be seen, together defining an axis about which the legs 6 may pivot for spreading purposes.

Mounted within the body 2 and between the body apertures 4 is a supporting element 14 having cylindrical ends 16 and having an axial passage 18 therethrough. A central upward projection 20 is preferably formed integral therewith, said projection having a vertical aperture 22 into which the end 24 of operating shaft 26 is received, that shaft having an integrally formed pair of looped portions 28 positioned above the tip 24 and extending to either side thereof and over the cylindrical ends 16 of the supporting element 14.

A pair of substantially identical movable members generally designated 30 are rotatably mounted, one on each of the cylindrical element ends 16. Each of the movable members 30 is preferably formed in one piece by a molding operation or the like and comprises a first portion 32 having an inner axial passage 34 of a size slightly larger than the exterior of the element end 16 and receivable thereover, the first portion 32 of the movable member 30 thus constituting a bearing portion by means of which the member 30 is rotatably mounted on an appropriate cylindrical end 16 of the supporting element 14. The movable member 30 includes a second portion 36 which extends out from the first portion 32 toward the body apertures 4 and which is adapted to pass through the leg apertures 8 and thus enter the hollow interior of the legs 6.

The end surface 38 of this second member portion 36 is provided with a pair of grooves 40 and 42, those grooves being angularly related to one another and preferably oriented substantially perpendicular to one another, the angular relationship between the grooves 40 and 42 corresponding to the desired difference in frontal angular position of the legs 6 in standing and sitting position respectively. As here disclosed the groove 40 is employed to determine the sitting position of the legs 6 and the groove 42 is employed to determine the standing position thereof. The groove 40 intersects the axis of the member 30 while the groove 42, although substantially perpendicular to the groove 40, is positioned somewhat below the axis of the member 30. Hence when the legs 6 are in standing position they will not only be differently angu-

larly oriented with respect to the body 2 but will also be positioned slightly lower with respect to the body 2 than when they are in their standing position, this being desired in order to provide proper clearance for the legs 6 as they move within the body apertures 4. The width of each of the grooves 40 and 42 is such that the pin 12 and/or the opposed tubular projections 10 are receivable and rotatable therein. The tubular projections 10 may be considered as thickened portions of the pin 12, and hereafter when the pin 12 is referred to it will be understood that the projections 10 are included.

The second member portion 36 is provided with an axial passage 44, preferably somewhat smaller than the axial passage 34 in the first member portion 32 so as to define a shoulder 46 where they meet, and a rubber band 48 or other spring tension device passes through the axial passages 44, 34 and 18 and is connected at opposite ends, by means of hooks 50, to the pins 12 of the legs 6. The action of the resilient tension member 48 is such as to cause the legs 6 to move inwardly until the pins 12 come into contact with the end surfaces 38 of the moving members 30, the pins 12 thus tending to fit into one or the other of the grooves 40 or 42. It will be noted that the groove 42 has comparatively steep sides, whereas the groove 40 has sides 52 which are equally steep and opposite sides 54 which are much more gradually inclined, the gradually inclined sides 54 being directed toward the groove 42 corresponding to the standing position of the legs in the direction in which the pins 12 carried by the leg 6 will move when the legs are moved from sitting to standing position.

The legs 6 are interconnected for alternate back and forth movement to simulate walking by means of pins generally designated 56 secured to and extending upwardly from the movable members 30 and entering the loops 28 formed in the shaft 26. Hence as one leg 6 is moved forwardly, the pin 56 operatively connected thereto will engage the loop 28 through which it passes and cause the shaft 26 to rotate, the other loop 28 moving the pin 56 passing therethrough so as to cause the leg 6 operatively connected thereto to move in the opposite direction. Since the pins 56 project from the moving members 30 to a considerable degree, they must be fairly strong and hence are preferably made of metal or the like. As a result they cannot readily be made integral with the moving members 30, which are preferably formed of some suitable moldable plastic material. In order to facilitate assembly of the pins 56 with the moving members 30, the pins comprise an upwardly projecting finger 58 and a bottom loop 60, the size of the loop being such as to pass through the axial passage 34 in the first member portion 32 but not through the axial passage 44 in the second member portion 36. A slot 62 is formed or cut in the first member portion 32 and extends from the end surface thereof to the shoulder 46, the slot having a width sufficient for the finger 58 to pass therethrough. The pin 56 may be mounted in place on the moving member 30 by sliding the finger 58 through the slot 62 while the loop 60 passes through the axial passage 34, and after the pin 56 has been moved all the way in, the loop 60 abutting the shoulder 46, the plastic material of which the moving member 30 is made may be distorted at the slot 62, as by the use of a heated tool, so as to fix the position of the pin 56 relative to the moving member 30.

As here disclosed, the shaft 26 extends upwardly through the neck portion 64 of the body 2 and into a hollow head 66 mounted on the neck portion 64. A cup-shaped bearing member 68 is maintained in axial position along the shaft 26 by means of washer 70 and staked portions 72 on the shaft. The head 66 is provided with a bracket 72 through which the shaft 26 passes, the upper portion of that shaft being staked at 74 and a washer 76 being interposed between the staked portion 74 and the bracket 72. A spring 78 surrounds the shaft 26 below the bracket 72 and is held in compressed condition between washer 80 immediately under the bracket 72 and washer 82 held in axial position on the shaft 26 by means of staked portions 84. Each of the washers 80 and 82 is provided with a central portion 86 snugly surrounded by the spring 78 which serves to hold the spring laterally in place. By reason of this mounting arrangement whenever the shaft 26 rotates, as will be the case when the doll is walked, the head 66 will move therewith. However, because of the frictional connection between the head 66 and the shaft 26, the normal or mid-point position of the head 66 relative to the body 2 may be adjusted at any time merely by rotating the head 66 relative to the body 2 while the legs 6 and the shaft 26 are stationary.

Because of the operative engagement between the pins 12 and the slots 40 or 42, a definite angular orientation of the legs 6 relative to the body 2 is provided whether the legs are in standing or in sitting position. Because the pins 12 are rotatable within the slots 40 or 42, the pins 12 define the axis of rotation about which the legs may be moved to vary the degree of spreading thereof whether the legs are in standing position (see Fig. 1, where the broken lines indicate the legs when spread) or in sitting position (see Fig. 2, where the broken lines similarly indicate the spread position of the legs). The individual components of the moving and mounting mechanism are readily assembled merely by inserting the shaft end 24 in the aperture 22 and placing the moving members 30 in position on the cylindrical supporting element ends 16 with the fingers 58 of the pins 56 entering opposite loops 28. The head mounting structure may already be in position, provided the neck opening is large enough, or may be added to the shaft 26 after it has first been passed through the neck opening. The head may be secured in place merely by causing the prongs 88 of the bracket 72 to pass through appropriate apertures in the head 66, those prongs then being bent over as shown. It will be noted that the head mounting arrangement does not require modification of the conventional head structure per se.

The legs are readily assembled on the doll by passing the resilient tension member 48 through the mounting mechanism, engaging one hook 50 with the pin 12 of one leg 6, stretching the tension member 48 so that the other hook 50 engages with the pin 12 on the other leg 6, and then permitting the tension member 48 to pull the legs together. It will be noted that the legs themselves, when they engage with the movable members 30 and with the body apertures 4, serve in part to support the moving and mounting structure within the doll body. Additional support therefore is afforded by the bracket 72, which prevents the shaft 26 from moving downwardly, and by the frictional engagement between the shaft 24 and the aperture 22 into which the latter is received.

In order to move a leg from sitting to standing position or vice versa it is only necessary to move the leg outwardly against the action of the tension member 48 a sufficient distance to cause the pin 12 to become disengaged from whichever groove it may be in, and to then swing the leg so that the pin 12 lines up with and is received within the other groove. The somewhat inclined sides of the grooves 40 and 42 will act as cam surfaces causing the leg 6 to move outwardly a sufficient distance provided that enough rotative force is applied to the legs.

The structure in question is exceedingly simple, inexpensive and easily assembled, yet it permits control of the position of the doll legs whether in sitting or standing position and it further permits pivotal movement of those legs in either position and to any desired degree independently of the position of the body.

While but a single embodiment of the present invention has been here disclosed, it will be apparent that many variations may be made in the details thereof without

departing from the spirit of the invention as defined in the following claims.

I claim:

1. A leg mounting arrangement for a walking doll comprising a doll body having an aperture at the lower part thereof, leg moving mechanism in said body and including a movable member a portion of which has a surface directed toward said aperture, said surface having a pair of grooves therein angularly oriented with respect to one another, a leg, a pin on said leg extending substantially perpendicular to the length of said leg and adapted to be received in one or the other of said grooves depending on the orientation of said leg relative to said body, the angular orientation of said grooves with respect to one another corresponding to the orientation of said pin when said leg is oriented relative to said body in standing or sitting position, and a resilient member active on said leg so as to cause it to move toward said movable member so that said pin tends to seat in a groove, said leg then moving with said movable member for walking purposes, and said leg being pivotal about said pin as an axis while said pin is in a groove, said pin being movable from one groove to the other, thus permitting said leg to move between standing and sitting positions, by pulling said leg away from said movable member against the action of said resilient member and moving said leg independently of said movable member.

2. A leg mounting arrangement for a walking doll comprising a doll body having an aperture at the lower part thereof, a leg moving mechanism in said body and including a movable member a portion of which has a surface directed toward said aperture, said surface having a pair of grooves therein angularly oriented with respect to one another, a leg the upper portion of which is apertured to receive said portion of said movable member, a pin in said leg opposite said leg aperture extending substantially perpendicular to the length of said leg and adapted to be received in one or the other of said grooves depending on the orientation of said leg relative to said body, the angular orientation of said grooves with respect to one another corresponding to the orientation of said pin when said leg is oriented relative to said body in standing or sitting position, and a resilient member active on said leg so as to cause it to move toward said movable member so that said pin tends to seat in a groove, said leg then moving with said movable member for walking purposes, and said leg being pivotal about said pin as an axis while said pin is in a groove, said pin being movable from one groove to the other, thus permitting said leg to move between standing and sitting positions, by pulling said leg away from said movable member against the action of said resilient member and moving said leg independently of said movable member.

3. The leg mounting arrangement of claim 1, in which said resilient member is secured to said pin.

4. A leg mounting arrangement for a walking doll comprising a doll body having a pair of opposed apertures at the lower part thereof, leg moving mechanism in said body including a pair of movable members portions of which have end surfaces directed respectively toward said body apertures, said mechanism having a passage therethrough between said body apertures, a pair of legs on opposite sides of said body and opposite said body apertures, a resilient member passing through said moving mechanism passage and operatively connected to said legs so as to draw them together and into engagement with said movable member end surfaces, and disengageable cooperating pivotal mounting means on said legs and said end surfaces respectively, said mounting means comprising a pair of angularly oriented grooves cooperating with a pin extending in a direction substantially perpendicular to the length of the corresponding leg and receivable in either of said grooves and rotatable therein, the angular orientation of said grooves relative to one another corresponding to the orientation of said pins when said legs are oriented in standing and sitting positions, said legs moving with said movable members for walking purposes when said pins are engaged in the grooves corresponding to the standing orientation of said legs, said legs being pivotal about said pins as an axis while said pins are in either of said grooves, said pins being movable from one groove to the other, thus permitting said legs to move between standing and sitting positions, by pulling said legs away from said movable members against the action of said resilient member and moving said legs independently of said movable members.

5. The leg mounting arrangement of claim 4, in which the upper portion of said legs are apertured opposite said body apertures, said legs being hollow and carrying said pins inside themselves opposite said leg apertures, and said legs entering said body apertures and the end surfaces of said movable members entering said leg apertures, said end surfaces carrying said grooves with which said leg-carried pins selectively engage.

6. The leg mounting arrangement of claim 5, in which said resilient member is secured to said leg-carried pins.

7. The leg mounting arrangement of claim 5, in which said grooves corresponding to the standing position of said legs have comparatively steep sides, thus inhibiting movement of said pins out therefrom and hence inhibiting movement of said legs to sitting position, and in which said other grooves have a gradually inclined side directed toward said first groove, thus facilitating movement of said pins out therefrom toward said side and hence facilitating movement of said legs to standing position, and in which said resilient member is secured to said leg-carried pins.

8. In a walking doll, a doll body having sockets opening through the opposite sides at the lower end thereof, legs having upper ends fitting said sockets for walking movement, a pair of axially aligned tubular members arranged within the body and extending into the upper ends of the legs on a transverse axis extending through the centers about which the legs turn in the sockets, said tubular members having notches in the outer ends thereof, cross members extending through said notches and affixed to the legs for turning of the tubular members with the turning of the legs respectively, resilient means carried within said tubular members retaining said cross members in said notches and securing the legs in the sockets in inwardly tensioned relation, and motion transmitting means coacting with the tubular members, said motion transmitting means including a member oscillatably mounted in upright relation within the doll body and having lever arms, and elements carried by said tubular members and engaging said arms for effecting movement of one of the legs in one direction when the other leg is moved in the opposite direction.

References Cited in the file of this patent

UNITED STATES PATENTS

2,171,281	Torngren	Aug. 29, 1939
2,275,047	Hayden	Mar. 3, 1942
2,328,704	Birnbaum	Sept. 7, 1943
2,593,187	Reichelson	Apr. 15, 1952