C. ELLIS.

APPARATUS FOR TREATING OILS WITH GASES.

APPLICATION FILED FEB. 5, 1913.

1,071,221. Patented Aug. 26, 1913.

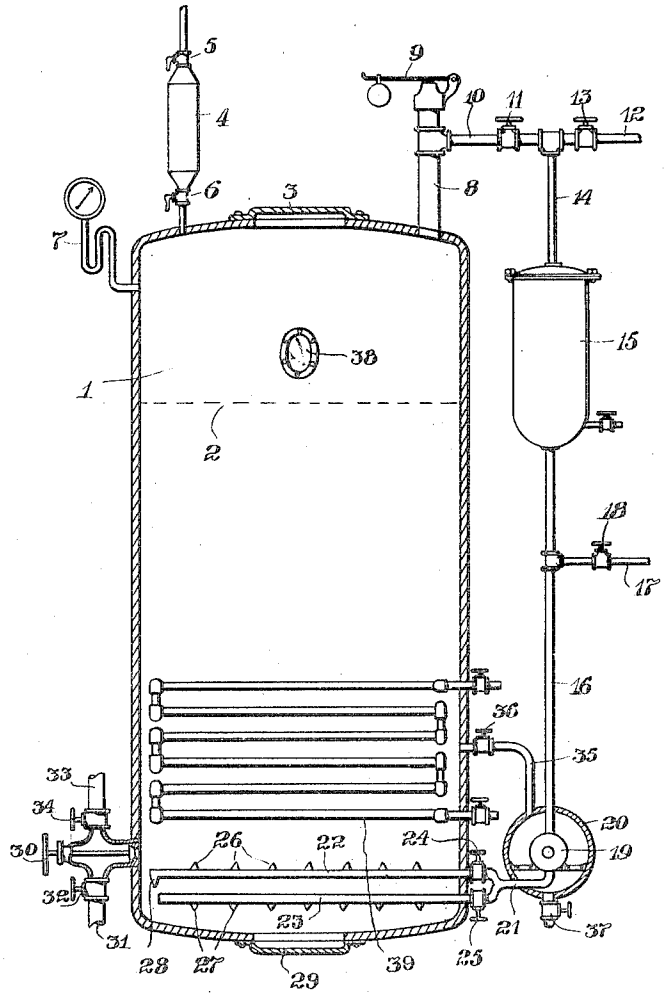

Witnesses:

Raymond Richardson.

Inventor:

Carleton Ellis

UNITED STATES PATENT OFFICE.

CARLETON ELLIS, OF MONTCLAIR, NEW JERSEY.

APPARATUS FOR TREATING OILS WITH GASES.

1,071,221. Specification of Letters Patent. Patented Aug. 26, 1913.

Application filed February 5, 1913. Serial No. 746,394.

To all whom it may concern:

Be it known that I, CARLETON ELLIS, a citizen of the United States, and a resident of Montclair, in the county of Essex and State of New Jersey, have invented certain new and useful Improvements in Apparatus for Treating Oils with Gases, of which the following is a specification.

This invention relates to apparatus for treating oils and the like with gaseous bodies, and in particular relates to apparatus for hydrogenating fatty or petroleum oils and the like through the continued action of a substantially cyclic current of hydrogen or hydrogen containing gas whose reaction with the oily material is engendered or facilitated by the presence of catalytic bodies; and the appended diagrammatic drawing affords in substantially vertical section an illustrative embodiment of said invention.

In the drawing 1 is a closed receptacle or tank adapted to stand considerable pressure when required, and which is customarily charged with oil to approximately the level 2.

3 is a manhole at the top of the tank.

4 is a catalyzer measuring or charging device consisting of a relatively small receptacle as a cylinder closed at either end by valves such as are shown at 5 and 6, enabling catalyzer to be introduced without contact with the air.

7 is a pressure gage.

8 is a small standpipe or tube carrying the safety valve 9.

10 is a pipe carrying the valve 11 and communicating with the pipe 14, which in turn leads to the drier or purifier 15. The pipe 12 carrying the valve 13 serves to supply the apparatus with the required gas. The same pipe may be used for flushing out the apparatus with an inert gas or steam when same is required, or may be used as an exhaust vent for the spent gases. The pipe 17 carrying the valve 18 also may be used for the introduction of gas especially when the latter does not require passage through the drier or purifier 15. The pipe 16 extends from the receptacle 15 to the pump 19 which is inclosed in the housing or oil jacketing shell 20. From the pump a pipe 21 leads to the tank 1 and communicates with the gas distributers 22 and 23, regulation of the flow of gas to either distributer being effected by the valves 24 and 25. The upper distributer 22 has outlets or nozzles extending along its length and these are directed upwardly with the exception of the end opening 28 which is directed downwardly. The openings 27 in the lower distributer 23 are directed downwardly.

30 is a valve to which is connected the oil draw off pipe 31 having the valve 32, and to which also is connected the oil inlet pipe 33 controlled by the valve 34.

35 is an equalizing pipe carrying the valve 36 and connecting the receptacle 1 with the housing 20.

37 is a draw off, 38 a sight glass and 39 a steam coil.

The nature of the apparatus as well as the peculiar or important functioning of the several parts thereof will be rendered clear from the following description of operation, and by the way of specific illustration the treatment of fatty oils with hydrogen in the presence of catalytic material to form hydrogenated or hardened fats will be set forth.

An oil, as for instance cotton seed oil, is charged into the tank 1 to about the level indicated by 2 and steam is passed through the coil 39 to raise the temperature of the contents of the tank to the requisite working temperature, which for palladium catalyzers is usually about 100° C. and for nickel catalyzers 150° C.–175° C., etc. Hydrogen gas is delivered to the apparatus through the pipe 17 and any air in the tank and connections is flushed out with the gas until the tank has been freed of oxygen. The valve 36 is opened after charging the tank with oil so as to allow the pump housing 20 to fill with oil thus submerging the pump in oil. When the pump circulates the hydrogen gas, leakage of the latter through the stuffing boxes of the pump collects in the upper part of the housing and passes into the tank 1 when the valve 36 is open. Hydrogen is a very penetrating gas and when hot and under considerable pressure it passes very easily through the ordinary stuffing box or gland, causing at times a very large loss of hydrogen. This is undesirable as the gas is thus wasted and often times such waste represents a considerable proportion of the total expense of treatment. By submerging the pump in oil at a pressure preferably that of the oil and gas in the tank 1 it will be evident that such loss is eliminated. The pump having been

put into operation under these conditions the gas is introduced into the tank 1 through the distributers 22 and 23, passes through the oil and then out of the tank 1 through the pipes 8, 10 and 14, the receptacle 15 and again through the pump, continuing to thus circulate in a cyclic manner until the oil has been sufficiently hydrogenated. The distributers 22 and 23 may be used separately or collectively. An upward stream of gas is produced by the distributer 22 and a downward stream which quickly reverses its direction is obtained by means of the distributer 23. The downwardly directed nozzle 28 prevents the collection of sediment in the distributer 22 and thus precludes choking of same under normal conditions of operation.

When pyrophoric catalyzers are used, such as nickel reduced by hydrogen, the catalyzer either in dry form or admixed with some oil, is introduced into the tank 1 by means of the catalyzer container 4. Exposure to the air is of not great importance when the catalyzer is covered with oil, but when in dry form, if pyrophoric, the efficiency of the catalyzer is largely lost by slight exposure to the air. Hence the container 4 enables handling pyrophoric material without deterioration of the latter. The catalyzer is preferably introduced into the oil after the pump 19 has been put into motion so that a current of gas passes rapidly through the oil and maintains the catalyzer in suspension, which is easily done if the particles of catalyzer are not too large and heavy.

It will be noted that the oil inlet and outlet which join with the valve structure 30 allow of a well at the bottom of the tank. This permits of settling the catalyzer after treatment of the oil, withdrawal of the oil largely freed of catalyzer by such deposition, and introduction of another charge of oil without exposure of the catalyzer to the air. After the entry of a second charge of oil the valve 24 may be closed throwing the entire current of hydrogen into the lower distributing member 23 and causing the jets of hydrogen to impinge on the mass of deposited catalyzer, thus loosening it and bringing same again into suspension. The valve 24 may then be opened.

According to circumstances the receptacle 15 may be used as a drier or purifier, or it may be without function and simply form a part of the gas conduit.

Depending on the oils to be treated and the use to which the resulting product is to be put, various pressures of gas, ranging from about atmospheric to five or ten atmospheres or so, may be employed. The pump 19 even though of the ordinary rotary or centrifugal type will operate efficiently irrespective of the pressure on the whole apparatus. With oil immersion the pump may be run for a long period without substantial loss of gas through escape thereof by way of the stuffing boxes. The arrangement of the parts as described precludes waste of gas in this manner.

The foregoing description is illustrative and does not signify precise limitation thereto but comprehends reasonable equivalents for the several parts of aforesaid apparatus; nor is there signified any limitation with respect to the employment of all the said parts or their equivalents under the present invention, it being feasible to dispense with one or more of the illustrated features or parts according to the conditions in hand.

What I claim is;—

1. An apparatus for treating oil with hydrogen gas which comprises a closed receptacle adapted to contain oil, a circulating pump for passing said gas in cyclic manner through said receptacle, a housing substantially surrounding said pump, and a conduit connecting said housing with said receptacle.

2. An apparatus for treating oil with hydrogen gas which comprises a closed receptacle adapted to contain oil, a circulating pump for passing said gas in substantially cyclic manner through said receptacle, a housing substantially surrounding said pump, and a conduit connecting said housing with the lower part of said receptacle; whereby said housing becomes filled with oil under a pressure substantially equal to that of the oil in said receptacle.

3. An apparatus for treating oil with hydrogen gas which comprises a closed receptacle adapted to contain oil, a circulating pump adjacent to the lower part of said receptacle for passing said gas in substantially cyclic manner through said receptacle, a housing substantially surrounding said pump, and a conduit connecting the upper part of said housing with said receptacle; whereby said housing becomes filled with oil under a pressure substantially equal to that of the oil in said receptacle.

4. An apparatus for treating oil with hydrogen gas which comprises a closed receptacle adapted to contain oil, means for introducing catalyzer thereinto without contact of said catalyzer with air, means for heating said receptacle, an inlet for the admission of fresh gas and an outlet for the removal of spent gas, a sight glass in the wall of said receptacle, an oil inlet and outlet connected with the same valve structure, and raised above the bottom of said receptacle; whereby a well in the bottom of said receptacle for the deposition of catalyzer is secured, a circulating pump external to said receptacle for passing said gas in a substantially cyclic manner through said receptacle and its oil contents, a housing sub-

stantially surrounding said pump, a conduit connecting the upper part of said housing with said receptacle at a point below the oil level thereof; whereby said housing becomes filled with oil under a pressure substantially equal to that of the oil in said receptacle, a gas return pipe extending from the upper part of said receptacle to said pump, interposed in said pipe a drying and purifying chamber, in the lower part of said receptacle distributing means comprising two distributing members horizontally disposed, one of said members having gas discharge orifices upwardly directed and the other of said members having gas discharge orifices downwardly directed, and valved pipes connecting said members with the discharge side of said pump.

Signed at Montclair in the county of Essex and State of New Jersey this 1st day of February A. D. 1913.

CARLETON ELLIS.

Witnesses:
NATHANIEL L. FOSTER,
BIRDELLA M. ELLIS.