US 20080234067A1

(19) United States

(12) Patent Application Publication

(10) Pub. No.: US 2008/0234067 A1

(43) Pub. Date: Sep. 25, 2008

Lo

(54) GOLF CLUB HEAD

(75) Inventor: Chih-Wei Lo, Taipei City (TW)

Correspondence Address:
ABELMAN, FRAYNE & SCHWAB
666 THIRD AVENUE, 10TH FLOOR
NEW YORK, NY 10017 (US)

(73) Assignee: FU SHENG INDUSTRIAL CO., LTD.

(21) Appl. No.: 11/796,719

(22) Filed: Apr. 26, 2007

(30) Foreign Application Priority Data

Mar. 20, 2007 (TW) 96204438

Publication Classification

(51) Int. Cl.
A63B 53/04 (2006.01)

(52) U.S. Cl. 473/350

(57) ABSTRACT

A golf club head includes a head body having an opening and a connection portion around the opening; and a cup face including a main board having a bending portion toward the head body on at least one edge of the main board, wherein a joint surface is formed on an edge of the bending portion to be combined with the connection portion of the head body; and a board structure stacked with the main board, wherein the material of the board structure is different from the material of the main board, and an explosion welding layer is formed between the board structure and the main board. Because of the design of the bending portion of the cup face, the welded areas of the cup face and head body are far away from the explosion welding layer to prevent the separation of the board structure and the main board.

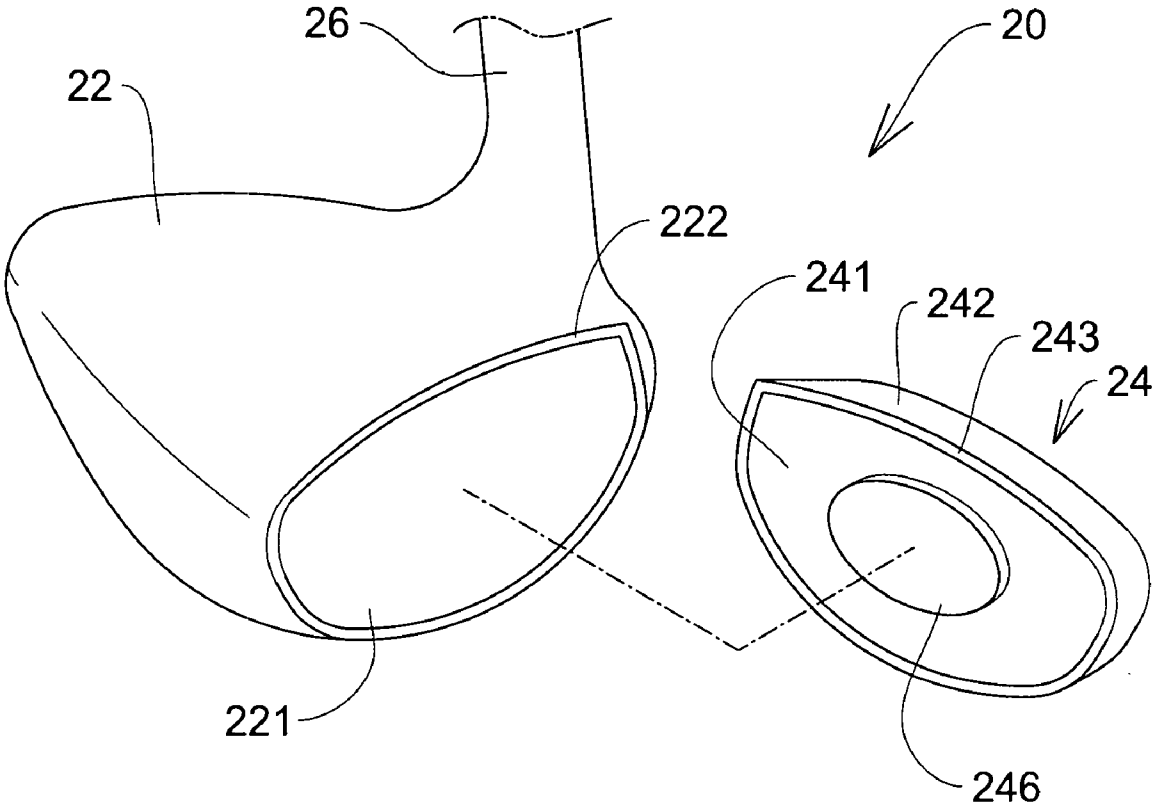

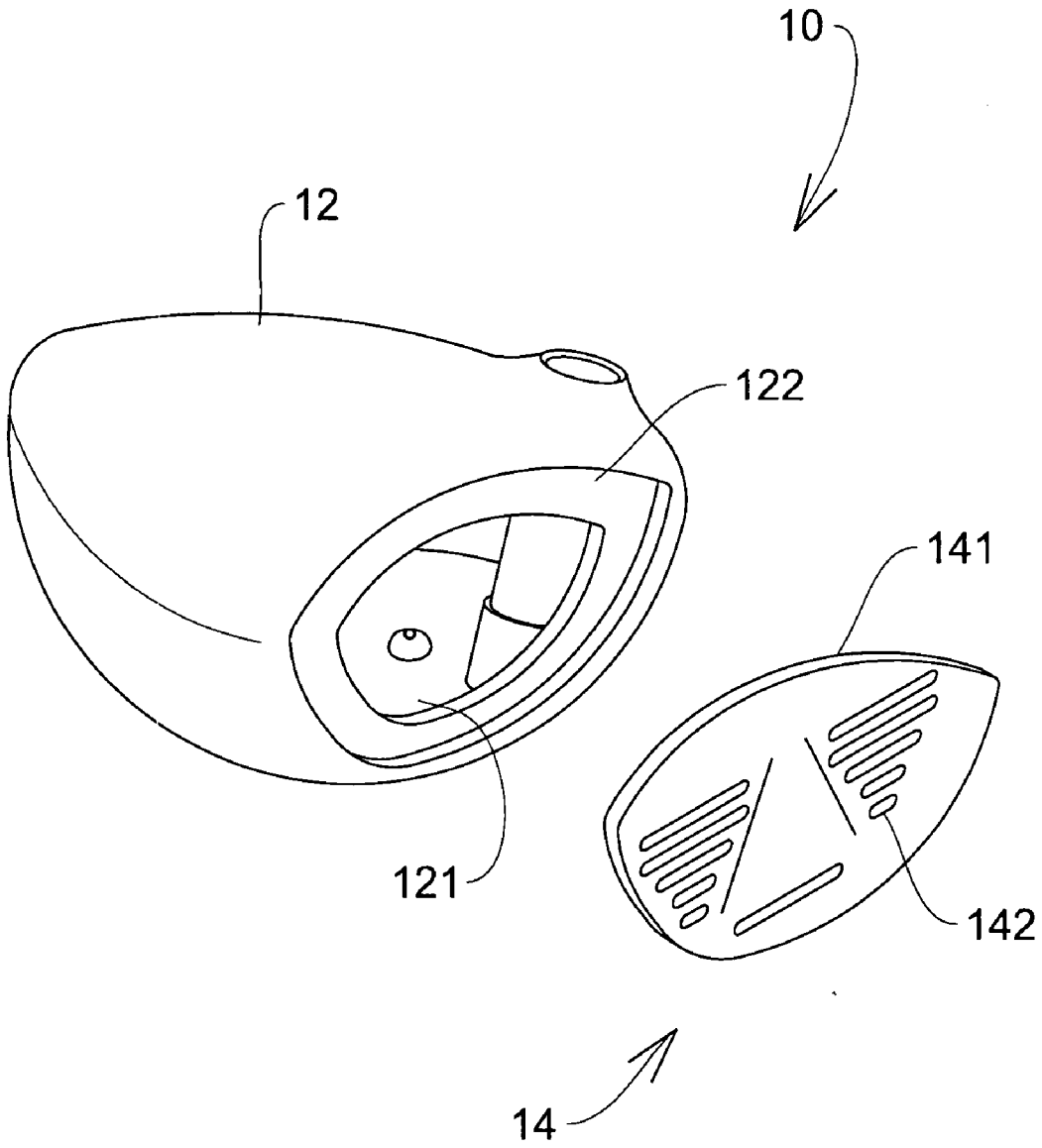

Fig. 1(PRIOR ART)

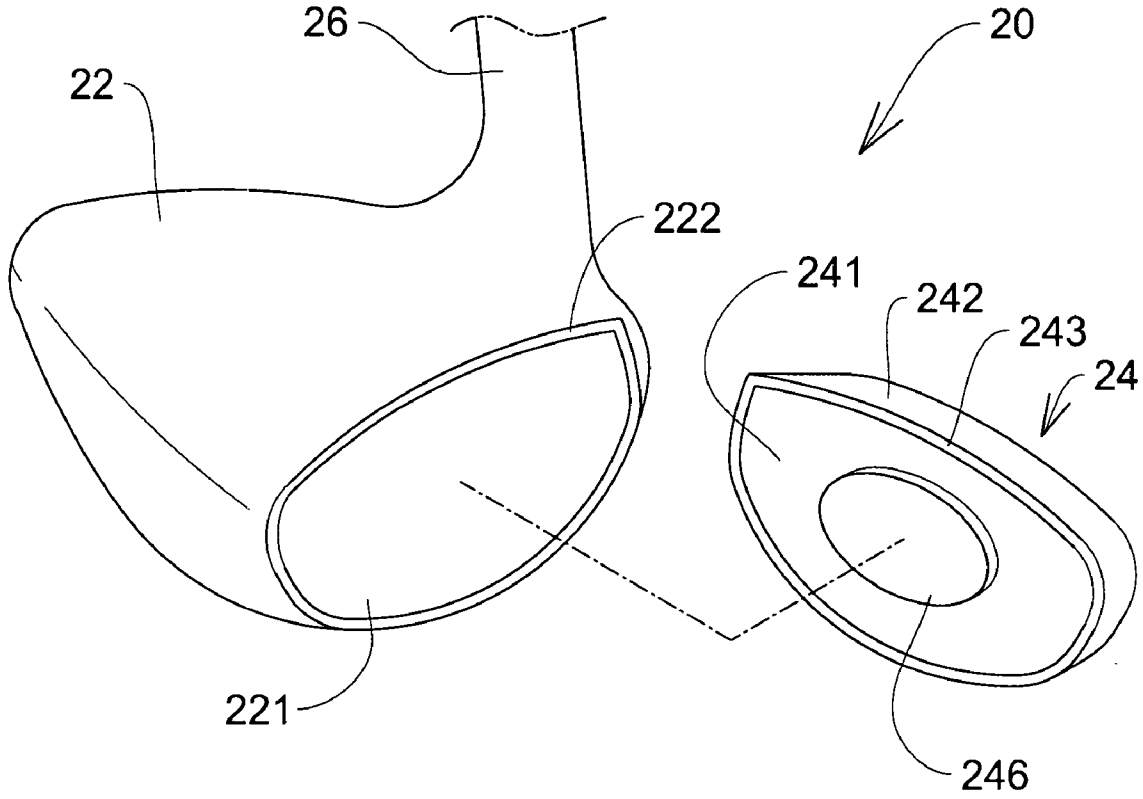

Fig. 2

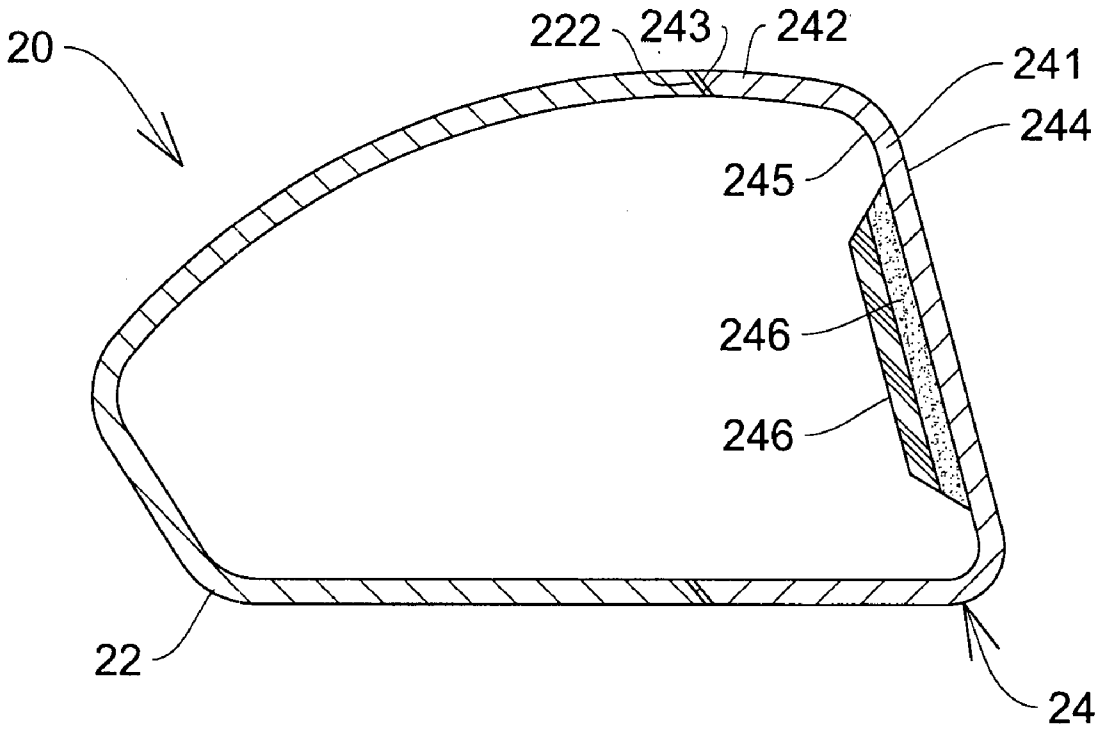

Fig. 3

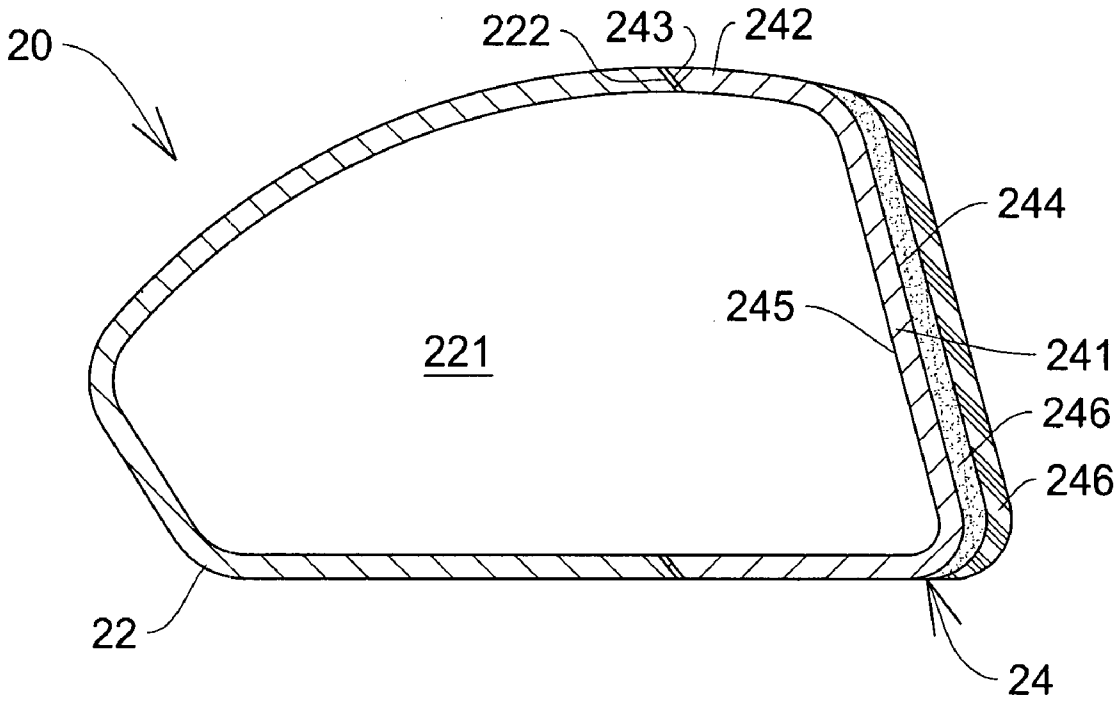

Fig. 4

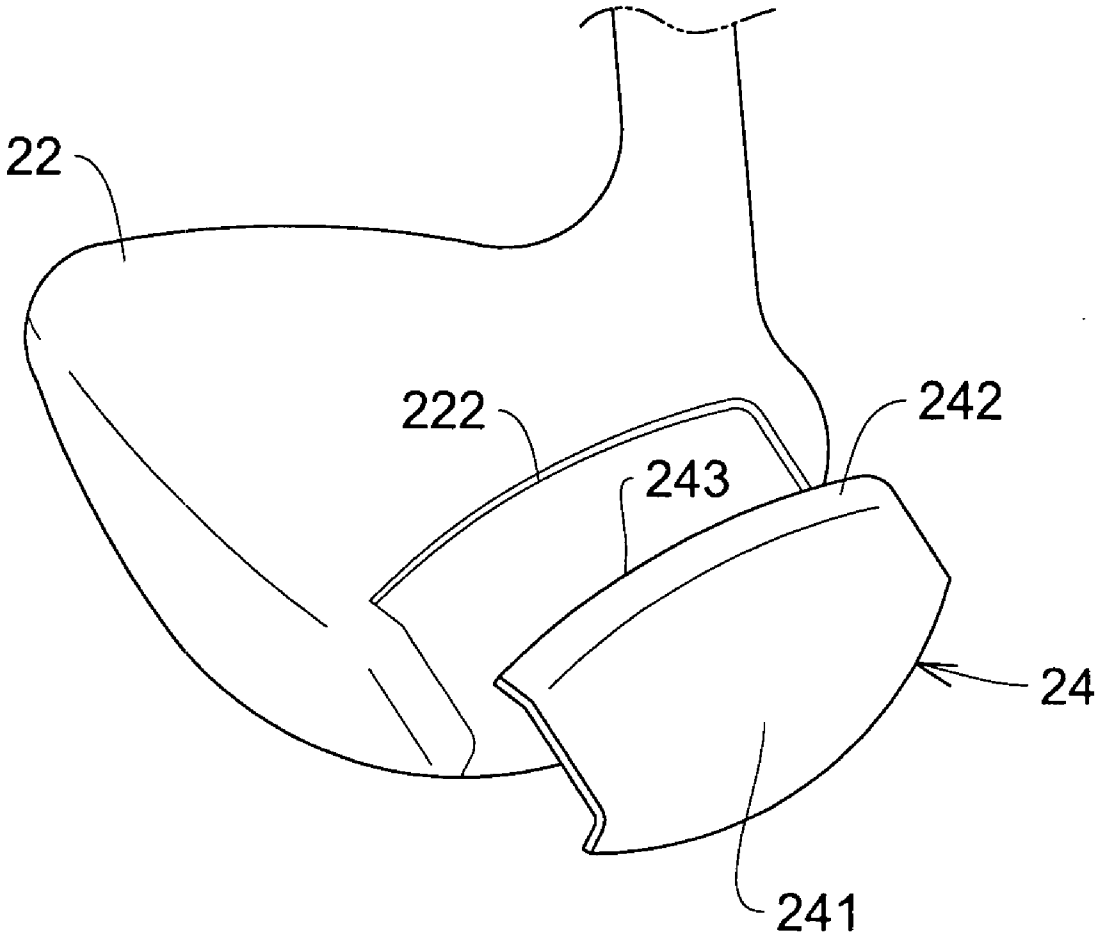

Fig. 5

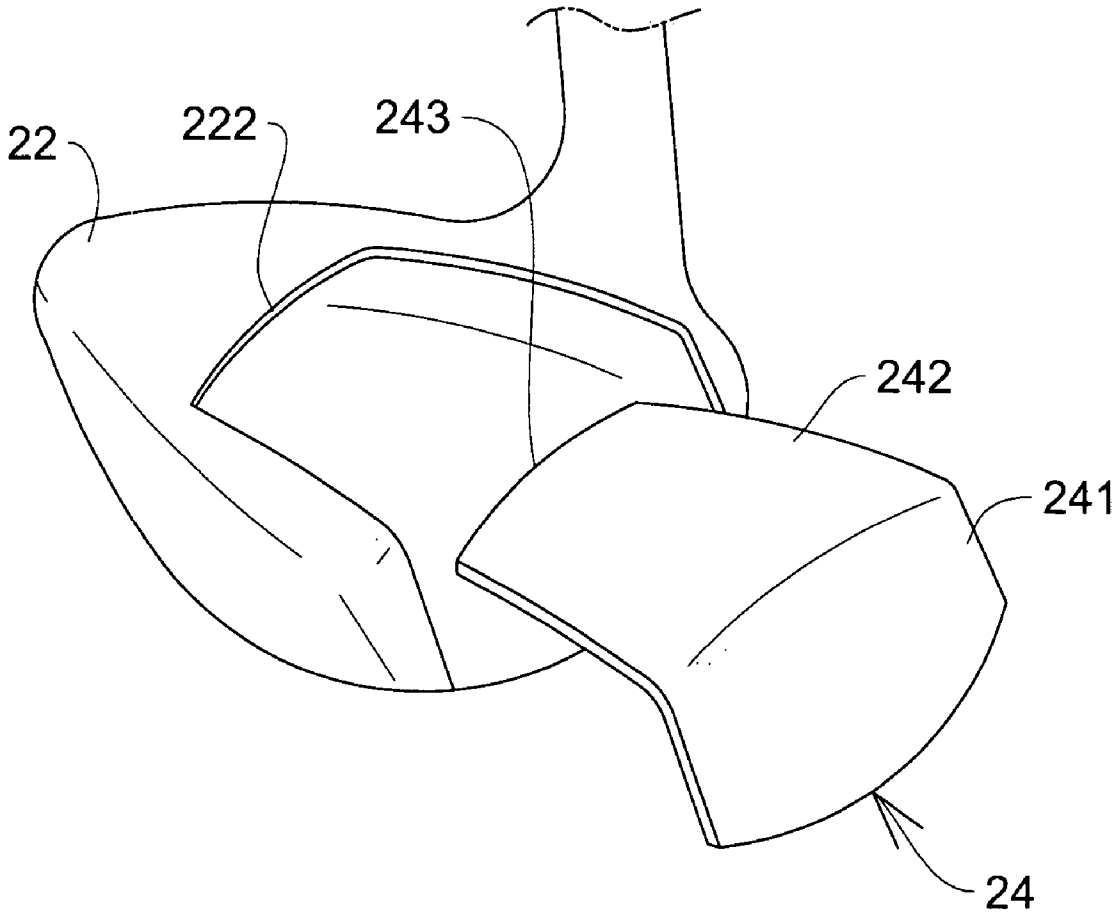

Fig. 6

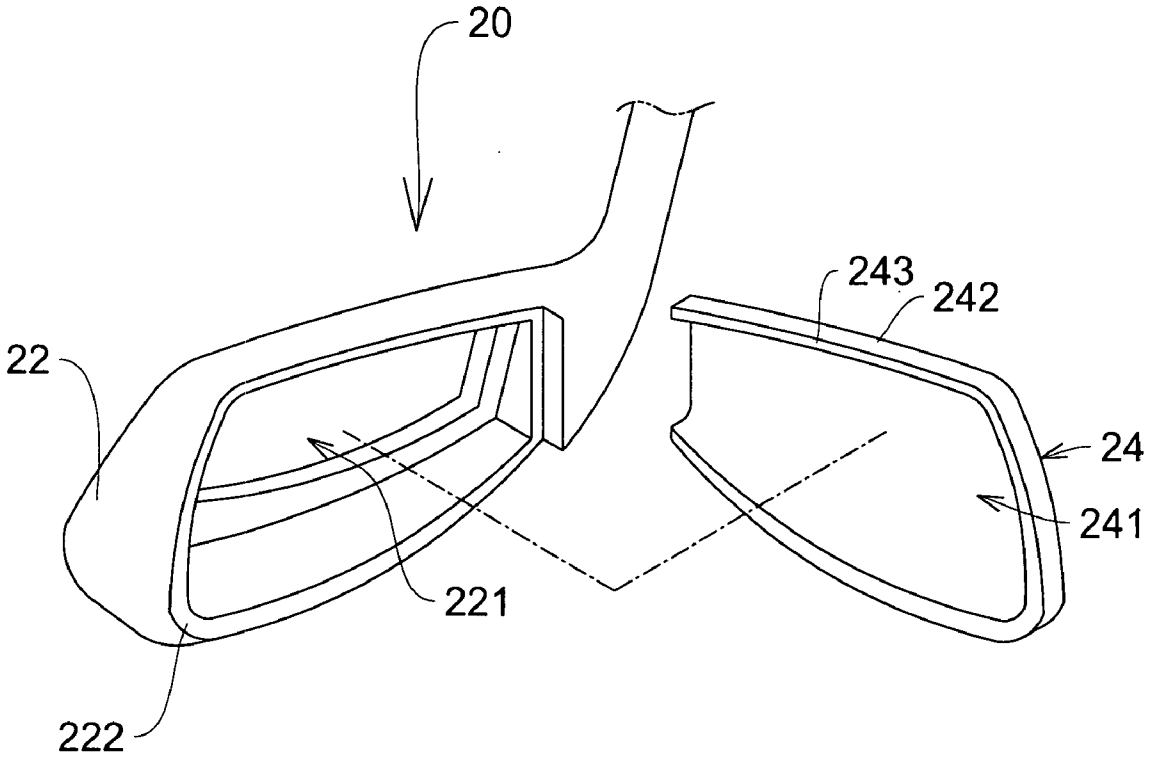

Fig. 7

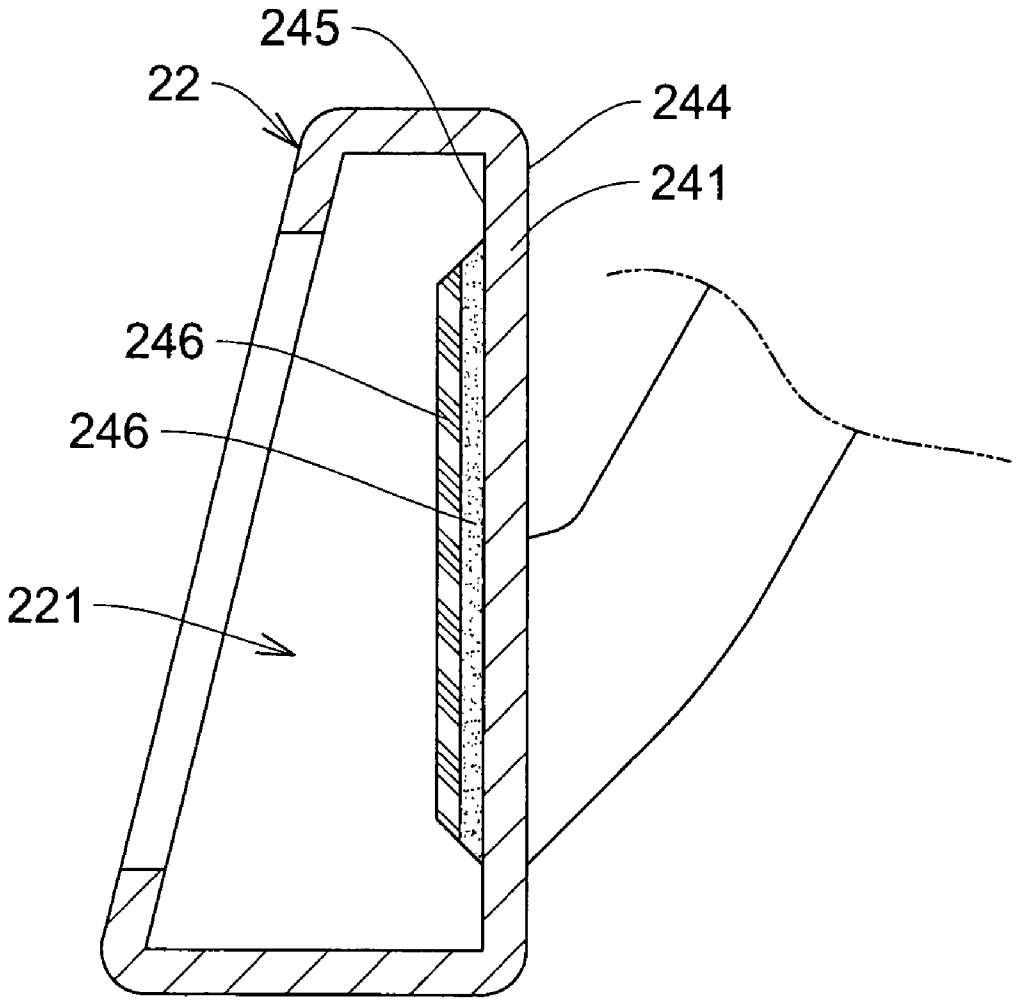

Fig. 8

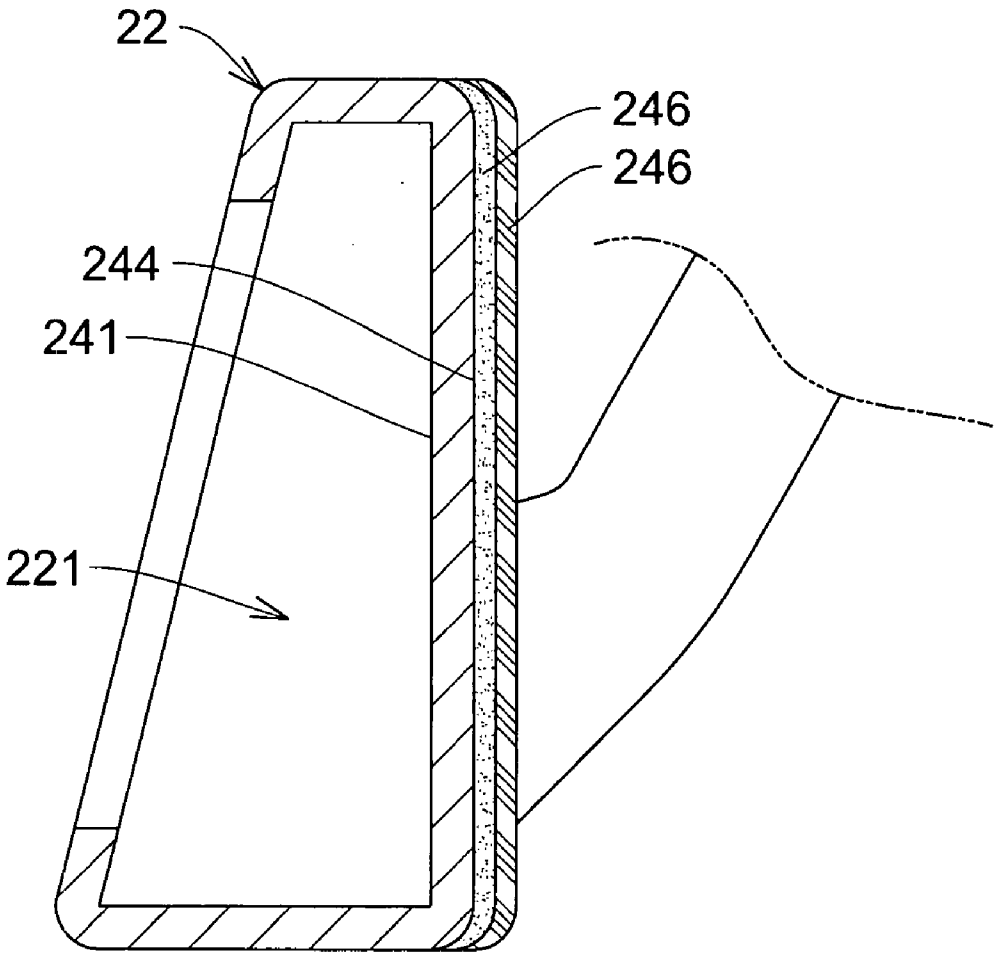

Fig. 9

GOLF CLUB HEAD

BACKGROUND OF THE INVENTION

[0001] 1. Field of the Invention

[0002] The present invention relates to a golf club head, and more especially, to the golf club head with a composite plate.

[0003] 2. Background of the Related Art

[0004] In general, the golf club head **10**, as shown in FIG. **1**, includes a head body **12** and a striking plate **14**. An opening **121** is formed on the front part of the head body **12** and a tab **122** around the opening **121**. The striking plate **14** has an outer surface **142** and an inner surface **141** with a welding area (not shown) corresponding to the tab **122** on the rim of the inner surface **141**. The tab **122** and the welding area are welded together so as to combine the striking plate **14** and the head body **12**.

[0005] However, according to the foregoing design of arranging the welding area on the rim of the inner surface, the striking area of the striking plate will be reduced because of the limitation of the welding area to affect the striking function. On the other hand, if the striking plate is a composite plate which is made by the explosion welding, the combination intensity of the composite plate will be destroyed due to the high welding temperature from the welding area to affect the quality of the golf club head.

SUMMARY OF THE INVENTION

[0006] In order to solve the foregoing problems, one object of this invention is to provide a golf club head which is formed by welding a cup face and a head body, wherein the cup face is manufactured by combining at least two different substrates in the explosion welding way, and the explosion welding areas of different substrates are far away from the welded areas between the cup face and the head body because of the design of the bending portion of the cup face, so that the high welding temperature will not cause the separation of different substrates and effectively enhance the quality of the golf club head.

[0007] One object of this invention is to provide a golf club head, wherein because the welded areas between the cup face and the head body are far away from the striking area, the striking area can be expanded to enhance the striking function which was limited by the welded areas in the past.

[0008] One object of this invention is to provide a golf club head with better striking feeling.

[0009] One object of this invention is to provide a golf club head having better elasticity to increase the striking distance, and the mass center of the golf club head can be adjusted by using different substrates to satisfy the weight distribution that the weight of outside portion of the golf club head is lighter than the weight of inside portion of the golf club head.

[0010] Accordingly, one embodiment of the present invention provides a golf club head including: a head body having an opening on a front part of the head body, and a connection portion around the opening; and a cup face including: a main board having a bending portion toward the head body on at least one edge of the main board, wherein a joint surface is formed on an edge of the bending portion to be combined with the connection portion of the head body; and a board structure stacked with the main board, wherein the material of the board structure is different from the material of the main board.

BRIEF DESCRIPTION OF THE DRAWINGS

[0011] FIG. **1** is a disassembled structure diagram illustrating the conventional golf club head;

[0012] FIG. **2** is a disassembled structure diagram illustrating a golf club head in accordance with one embodiment of present invention;

[0013] FIG. **3** is a cross-sectional diagram illustrating a golf club head in accordance with one embodiment of present invention;

[0014] FIG. **4** is a cross-sectional diagram illustrating a golf club head in accordance with another embodiment of present invention;

[0015] FIG. **5** is a disassembled structure diagram illustrating a golf club head in accordance with another embodiment of present invention;

[0016] FIG. **6** is a disassembled structure diagram illustrating a golf club head in accordance with another embodiment of present invention;

[0017] FIG. **7** is a disassembled structure diagram illustrating a golf club head in accordance with another embodiment of present invention;

[0018] FIG. **8** is a cross-sectional diagram illustrating a golf club head in accordance with another embodiment of present invention; and

[0019] FIG. **9** is a cross-sectional diagram illustrating a golf club head in accordance with another embodiment of present invention.

DETAILED DESCRIPTION OF THE INVENTION

[0020] FIG. **2** is a disassembled structure diagram illustrating a golf club head in accordance with one embodiment of present invention. In the present embodiment, the wood-type golf club head **20** for example, includes a head body **22** and a cup face **24**. An opening **221** is formed on the front part of the head body **22** and a connection portion **222** is around the opening **221** to correspond to the cup face **24**, wherein the common material of the head body **22** is stainless steel, such as 17-4 PH stainless steel. Further, a handle **26** is protruded form the side of the head body **22** to combine with a shaft (not shown). The cup face **24** includes a main board **241** having a bending portion **242** toward the head body **22** on at least one edge of the main board **241**. In a C-type cup face, for example, the bending portion **242** is C-shaped and formed on three edges of the main board **241**, and a joint surface **243** is formed on the front edge of the bending portion **242** to be combined with the connection portion **222** of the head body **22**. Referring to FIG. **2** and FIG. **3**, the main board **241** has an outer surface **244** as a striking face and an inner surface **245** toward the head body **22**, and a board structure **246** is stacked on inner surface **245** by means of explosion welding to form an explosion welding layer (not shown) between the board structure **246** and the main board **241**. In the present embodiment, the board structure **246** is a composite plate which is formed by stacking two different substrates, and the board structure **246**, whose size is smaller than the size of the inner surface **245**, is stacked on the center of the inner surface **245**. Accordingly, in the present embodiment, the main board **241** is a steel

substrate, and the board structure **246** is the combination of chemically pure titanium (CP Ti) substrate and titanium alloy (6-4Ti) substrate.

[0021] The manufacturing method of the cup face **24** includes: stacking the steel substrate, the pure titanium substrate and the titanium alloy substrate, performing an explosion welding process to combine the steel substrate, the pure titanium substrate with the titanium alloy substrate, and then milling the unnecessary portions of the pure titanium substrate and the titanium alloy substrate, and finally performing a press forging to manufacture the cup face, wherein the thickness of the steel substrate is about 0.5 to 4.0 millimeter (mm), the thickness of the titanium alloy substrate is about 0.5 to 4.0 mm, the thickness of the pure titanium substrate is about 0.5 to 2.0 mm, and the pure titanium substrate is between the steel substrate and the titanium alloy substrate.

[0022] In another embodiment, the board structure is only made of single substrate, such as pure titanium substrate, and the manufacturing method of the cup face includes: stacking the steel substrate and the pure titanium substrate, performing an explosion welding process to combine the steel substrate with a pure titanium substrate, and then performing the milling and the press forging processes to manufacture the cup face with two different substrates, wherein the thickness of the steel substrate is about 0.5 to 4.0 millimeter (mm), and the thickness of the pure titanium substrate is about 0.5 to 2.0 mm.

[0023] The foregoing design of setting board structure on the inner surface of the main board will improve the striking feeling. In the foregoing embodiment, the materials of the substrates of the cup face are not limited to steel, pure titanium and titanium alloy, and the stacking orders of foregoing different substrates are not limited, and further the substrates can be selected from two materials or over two materials of steel, titanium, copper, aluminum and magnesium. Besides, the combination of the joint surface and the connection portion is not only by welding, but also the pasting and the inserting.

[0024] FIG. **4** is a cross-sectional diagram illustrating a golf club head in accordance with another embodiment of present invention. The golf club head **20** includes a head body **22** and a cup face **24**. An opening **221** is formed on the front part of the head body **22** and a connection portion **222** is around the opening **221**. The cup face **24** includes a main board **241** with an outer surface **244** and an inner surface **245** having a bending portion **242** toward the head body **22** on the edges of the main board **241**, and a joint surface **243** is formed on the front edge of the bending portion **242** to be combined with the connection portion **222** of the head body **22**. The difference between this embodiment and the foregoing embodiment is that the board structure **246** in this embodiment covers on the outer surface **244** of the main board **241** to be as a striking face, wherein the board structure **246** is a composite plate which is formed by stacking two different substrates. In another embodiment, the board structure is only made of single substrate and covers on the outer surface of the main board.

[0025] In the foregoing design of covering board structure **246** on the outer surface **244** of the main board **241**, the main board **241** is a steel substrate and the board structure **246** is a composite plate which is formed by stacking the pure titanium substrate and the titanium alloy substrate or a single substrate, such as a pure titanium substrate, to make the golf club head **20** with better elasticity and increase the striking distance. Furthermore, the mass center of the golf club head **20** can be adjusted because of the striking face made of titanium to satisfy the weight distribution that the weight of outside portion of the golf club head is lighter than the weight of inside portion of the golf club head. Besides, the materials of substrates of the cup face **24** are not limited to steel, pure titanium and titanium alloy, and the stacking orders of foregoing different substrates are not limited, and further the substrates can be selected from two or more materials of steel, titanium, copper, aluminum and magnesium.

[0026] Besides, FIG. **5** and FIG. **6** are two disassembled structure diagrams illustrating golf club heads in accordance with two different embodiments of present invention. Please referring to FIG. **5**, the cup face **24** is an U-type cup face, wherein the bending portion **242** is formed on two opposite edges of the main board **241**, and a joint surface **243** is formed on the front edge of the bending portion **242** to be welded with the connection portion **222** of the head body **22**. Please referring to FIG. **6**, the cup face **24** is an L-type cup face, wherein the bending portion **242** is formed on top edge of the main board **241**, and a joint surface **243** is formed on the front edge of the bending portion **242** to be welded with the connection portion **222** of the head body **22**.

[0027] Furthermore, in another embodiment, the iron-type golf club head **20** for example, as shown in FIG. **7**, includes a head body **22** and a cup face **24**. An opening **221** is formed on the front part of the head body **22** and a connection portion **222** is around the opening **221**. The cup face **24** includes a main board **241** having a bending portion **242** toward the head body **22** on three edges of the main board **241**, and a joint surface **243** is formed on the front edge of the bending portion **242** to be combined with the connection portion **222** of the head body **22**. Please referring to FIG. **8**, the main board **241** has an outer surface **244** and an opposite inner surface **245**, and a board structure **246** is stacked on the inner surface **245** of the main board **241** by means of explosion welding, wherein the board structure **246** is a composite plate which is formed by stacking two different substrates. Further, in another embodiment, the board structure **246** as shown in FIG. **9** also can cover on the outer surface **244** of the main board **241**.

[0028] To sum up, in the present invention, the explosion welding way is used to combine different substrates of cup face, to have high combination intensity between different substrates of cup face. Furthermore, when the cup face and the head body are welded, the welded areas are far away from the combination area of the main board with the board structure because of the design of the bending portion of the cup face, so that the high welding temperature will not destroy the combination intensity between the board structure and the main board or the combination intensity between different substrates of board structure. Therefore, the present invention can prevent the separation of different substrates and effectively enhance the quality of the golf club head. On the other hand, because the welded areas are far away from the striking area, the striking area can be expanded to enhance the striking function which was limited by the welded areas in the past.

[0029] Although the present invention has been explained in relation to its preferred embodiment, it is to be understood that other modifications and variation can be made without departing the spirit and scope of the invention as hereafter claimed.

What is claimed is:

1. A golf club head, comprising:

a head body having an opening on a front part of the head body, and a connection portion around the opening; and

a cup face, comprising:

a main board having a bending portion toward the head body on at least one edge of the main board, wherein a joint surface is formed on an edge of the bending portion to be combined with the connection portion of the head body; and

a board structure stacked with the main board, wherein the material of the board structure is different from the material of the main board.

2. The golf club head according to claim **1**, wherein an explosion welding layer is formed between the board structure and the main board.

3. The golf club head according to claim **1**, wherein the board structure is a substrate or a composite plate comprising at least two different substrates.

4. The golf club head according to claim **3**, wherein the composite plate is formed by means of explosion welding.

5. The golf club head according to claim **1**, wherein the main board has an outer surface and an inner surface toward the head body, and the board structure is stacked on the center of the inner surface and the size of the board structure is smaller than the size of the main board.

6. The golf club head according to claim **1**, wherein the main board has an outer surface and an inner surface toward the head body, and the board structure covers the outer surface.

7. The golf club head according to claim **1**, wherein the bending portion is C-shaped and formed on the three edges of the main board.

8. The golf club head according to claim **1**, wherein the bending portion is formed on the two opposite edges of the main board.

9. The golf club head according to claim **1**, wherein the bending portion is formed on the top edge of the main board.

10. The golf club head according to claim **1**, wherein the joint surface and the connection portion are combined by means of welding, gluing or inserting.

11. The golf club head according to claim **1**, wherein the cup face is formed by press forging.

12. The golf club head according to claim **1**, wherein the material of the head body is stainless steel.

13. The golf club head according to claim **1**, wherein the materials of the main board and the board structure are selected from two materials or over two materials of steel, titanium, titanium alloy, copper, aluminum and magnesium.

* * * * *