(12) PATENT
(19) AUSTRALIAN PATENT OFFICE

(11) Application No. AU 199715165 B2
(10) Patent No. 710603

(54) Title
Spark ignition two-stroke internal combustion engine having a combustion controller

(51)[6] International Patent Classification(s)
F02D 037/02 F02D 009/08
F02B 011/00 F02D 015/04
F02D 009/04

(21) Application No: 199715165 (22) Application Date: 1997 .03 .07

(30) Priority Data

| (31) Number | (32) Date | (33) Country |
|---|---|---|
| 8-079283 | 1996 .03 .08 | JP |

(43) Publication Date : 1997 .09 .11
(43) Publication Journal Date : 1997 .09 .11
(44) Accepted Journal Date : 1999 .09 .23

(71) Applicant(s)
Honda Giken Kogyo Kabushiki Kaisha

(72) Inventor(s)
Shinichi Isomura; Yoshihiro Takada; Yuji Tsushima

(74) Agent/Attorney
SPRUSON and FERGUSON,GPO Box 3898,SYDNEY NSW 2001

(56) Related Art
US 4543916
GB 2269857

Spark Ignition Two-Stroke Internal Combustion Engine Having a Combustion Controller

## ABSTRACT

A spark ignition two-stroke internal combustion engine (1) comprises a combustion controller, which is capable of self-ignition burning of fresh air-fuel mixture in a combustion chamber (16) at least during low load operation by controlling an inlet of an exhaust passage (15) or opening area of a passage in an exhaust passage (15) with the aid of an exhaust control valve (24), dependently on at least the internal combustion engine rotation speed or throttle valve opening. Combustion chamber volume adjusting means (19, 20) are provided for varying the volume of the combustion chamber (16) depending on the operational condition of the internal combustion engine (1), by operating the exhaust control valve (24) so that the fresh air-fuel mixture in the combustion chamber (16) is self-ignition burnt during at least low load operation.

S & F Ref: 362850

**AUSTRALIA**

**PATENTS ACT 1990**

**COMPLETE SPECIFICATION**

**FOR A STANDARD PATENT**

**ORIGINAL**

---


Name and Address of Applicant: Honda Giken Kogyo Kabushiki Kaisha
1-1 Minamiaoyama 2-Chome
Minato-ku
Tokyo
JAPAN

Actual Inventor(s): Shinichi Isomura, Yoshihiro Takada, Yuji Tsushima

Address for Service: Spruson & Ferguson, Patent Attorneys
Level 33 St Martins Tower, 31 Market Street
Sydney, New South Wales, 2000, Australia


Invention Title: Spark Ignition Two-stroke Internal Combustion Engine Having a Combustion Controller

The following statement is a full description of this invention, including the best method of performing it known to me/us:-

# Spark Ignition Two-Stroke Internal Combustion Engine Having a Combustion Controller

## Detailed Description of the Invention

### Technical Field of the Invention

This invention relates to a spark ignition two-stroke internal combustion engine with a combustion controller which operates self ignition combustion of fresh in a combustion chamber namely active thermal environment combustion at least during low load operation.

### Prior Art

In a conventional spark ignition two-stroke internal combustion engine, an exhaust passage and scavenging passage which are opening-and-closing operated by a piston are formed on the inside peripheral surface of a cylinder hole, fresh pre-compressed in a crank chamber is supplied from the scavenging passage to a combustion chamber provided on the top of the cylinder hole, burnt gas in the combustion chamber is exhausted from the combustion chamber to the exhaust passage, fresh compressed in the combustion chamber is ignited with aid of the spark plug.

Such conventional spark ignition two-stroke internal combustion engine is disadvantageous in that exhaust gas contains much unburnt hydrocarbon and fuel consumption is high.

To solve the problem, the inventors of this invention had invented an internal combustion engine in which the pressure in a combustion chamber during the closing of an exhaust opening by a piston is appropriately controlled, fresh in the combustion chamber is activated by thermal energy of burnt gas remaining in the combustion chamber, thus fresh in the combustion chamber can be self-ignited at the ignition timing preferable for operation of the internal combustion engine, and a patent (Japanese Patent Laid-open No. Hei 7-71279) was applied.

**Problem to the Solved by the Invention**

In the above-mentioned spark ignition two-stroke internal combustion engine with a combustion controller, for example, under the condition with a small throttle valve opening as in the idling operation, even if an exhaust control valve is throttled to increase the residual amount of burnt gas burnt in the combustion chamber in the above-mentioned cycle in order to increase the temperature of the burnt gas and in order to self-ignite the fresh, the temperature of fresh containing residual burnt gas in the combustion chamber does not reach the self-ignition temperature and fresh can fail to be self-ignited because the throttle valve is throttled and fuel supply is reduced correspondingly.

Modification for solving the above-mentioned problem in which the temperature in the combustion chamber around the top dead point is increased by reducing the combustion chamber volume to increase the compression ratio while the stroke volume is maintained unchanged, results in knocking under high load operation, and cannot be used practically.

**Means for Solving the Problem and Effects**

The present invention relates a spark ignition two-stroke internal combustion engine having a combustion controller in which the passage opening area of the inlet of an exhaust passage or in said exhaust passage is controlled depending on at least the internal combustion engine rotation speed or throttle valve opening by operating an exhaust control valve so that fresh air and/or fuel mixture in a combustion chamber is self-ignition burnt during at least low load operation, wherein a combustion chamber volume adjusting means including a rotary valve which has a recess that communicates or not communicates to the combustion chamber through the opening to vary the compression ratio for varying the volume of said combustion chamber depending on operation condition of the internal combustion engine is provided.

Because the present invention is structured as described herein above, the volume of the above-mentioned combustion chamber is reduced to increase the

compression ratio by means of the above-mentioned combustion chamber volume adjusting means during low load operation particularly during idling operation when the throttle valve is throttled to reduce air supply and fuel supply, fresh containing residual burnt gas in the combustion chamber is adiabatically compressed strongly thereby, as the result, the fresh in the combustion chamber is self-ignited and burns in active thermal environment combustion mode to result in suppressed emission of unburnt hydrocarbon and improved fuel consumption.

According to the present invention, in addition, under normal operation condition when the throttle valve is opened, particularly under high load low speed operation condition when the engine is apt to knock, the volume of the combustion chamber is increased by means of the above-mentioned combustion chamber volume adjusting means to reduce the compression ratio, and thereby knocking is prevented and operation is performed quietly.

As described hereinbefore, by applying the present invention, the active thermal environment combustion area is expanded while knocking is prevented, fuel consumption is improved, and emission of unburnt hydrocarbon is suppressed.

**Preferred Embodiments**

Embodiments of the present invention shown in Fig. 1 and Fig. 2 will be described hereinafter.

A spark ignition two-stroke internal combustion engine 1 with a combustion controller 1 is to be mounted on a motorcycle not shown in the figures, in the spark ignition two-stroke internal combustion engine 1, a cylinder block 3 and cylinder head 4 are placed one above the other and combined each other solidly above a crank case 2, and the throttle valve opening and internal combustion engine rotation speed have characteristics shown in Z-line charts of Fig. 5 and Fig. 6.

A piston 6 is engaged and inserted slidably in the vertical direction in a cylinder hole 5 formed on the cylinder block 3, the piston 6 and a crank shaft 8 are

connected each other by a connecting rod 7, and the crank shaft 8 is rotatably driven as the piston moves up and down.

An intake passage 10 communicating to a crank chamber 9 in the crank case 2 is formed, a carburettor not shown in the figures and reed valve 11 are connected to the intake passage 10 in series, scavenging openings 12 are provided on the peripheral surface of the cylinder hole 5, an exhaust outlet 13 is provided at the position above the scavenging opening 12, the scavenging openings 12 communicate to the crank chamber 9 through a scavenging passage 14, and the exhaust outlet 13 communicates to an exhaust passage 15.

A spark plug 17 is provided at the top of a combustion chamber 16 above the cylinder hole 5, fresh mixed with fuel in the carburettor not shown in the figures is inhaled into the crank chamber 9 which is negatively pressurized during up stroke through the reed valve 11 and compressed during down stroke, the compressed fresh is supplied into the combustion chamber 16 from the scavenging passage 14 when the piston 6 goes down and the scavenging openings 12 are opened, burnt gas in the combustion chamber 16 is partially excluded from the exhaust outlet 13 into the exhaust passage 15 by the compressed fresh, and the scavenging opening 12 and subsequently the exhaust outlet 13 are closed as the piston 6 moves upward, the mixture in the combustion chamber 16 is compressed as the piston 6 moves upward, and around the top dead end, the mixture is ignited by the spark plug 17 or self-ignition with aid of thermal energy of residual gas generated in the previous cycle.

A cylindrical recess 18 communicating to the combustion chamber 16 is formed on the cylinder head 4 adjacent to the spark plug, a rotary valve body 19 is rotatably inserted in the cylindrical recess 18, a recess 20 is formed on the rotary valve body 19, the rotary valve body 19 is connected to a movable tab of a solenoid (not shown in the figures) with interposition of a lever not shown in the figures, sensors (not shown in the figures) for detecting the rotation speed of the spark ignition two-stroke internal combustion engine and the opening of a throttle valve not shown in the figures

are provided, a computer for performing following operations in response to reception of these both detected signals, and in the operational area A of Fig. 7 where the rotation speed of the spark ignition two-stroke internal combustion engine 1 is smaller than 5000 and the throttle valve opening is smaller than 8%, the above-mentioned solenoid is ON, the recess 20 of the rotary valve body 19 is closed and shielded from the combustion chamber 16 to result in reduced volume of the combustion chamber 16, thus the apparent compression ratio of the combustion chamber 16 is prescribed to be about 8, on the other hand, in the operational area B other than the operational area A in Fig. 7, the above-mentioned solenoid is not ON, the recess 20 of the rotary valve body 19 communicates to the combustion chamber 16 through the opening 21 as shown in Fig. 1 to result in increased volume of the combustion chamber 16, thus the apparent compression ratio of the combustion chamber 16 is prescribed to be about 6.

In the above-mentioned spark ignition two-stroke internal combustion engine 1, while the recess 20 of the rotary valve body 19 communicates to the combustion chamber 16 through the opening 21 to prescribe the apparent compression ratio to about 6, the active thermal environment combustion area X is in a range shown in Fig. 5, and while the recess 20 of the rotary valve body 19 is shielded from the combustion chamber 16 to prescribe the apparent compression ratio to about 8, the thermal environment combustion area Y is expanded as shown in Fig. 6.

Further, in operational condition of the spark ignition two-stroke internal combustion engine 1, when the ignition switch is cut-off, the exhaust control valve 24 is opened upward or the above-mentioned solenoid is turned off, the apparent compression ratio is prescribed to be 6 or the throttle valve is throttled to an opening smaller than the idle throttle opening of 5%.

Further, a valve containing recess 22 is formed above the exhaust passage 15, and the base of an exhaust control valve 24 is supported swingably in the vertical direction by a shaft 23 inserted through the cylinder block 3 in parallel to the crank shaft 8 in the downstream of the valve containing recess 22.

Further, a flat slotted hole 25 is formed along the flat plane of the exhaust control valve 24 at the tip of the exhaust control valve 24, rotors 26 are inserted rotatably around the shaft in parallel to the crank shaft 8 in both sides of the above-mentioned exhaust passage 15, and both ends of a connecting shaft 27 inserted in the flat slotted hole 25 of the exhaust control valve 24 is eccentrically inserted in integration to the above-mentioned both rotors 26.

The rotors 26 are connected to a governor not shown in the figures which detects rotation speed of the crank shaft for operation, while the rotation speed of the crank shaft is low, the exhaust control valve 24 swings downward as shown in Fig. 2, on the other hand, while the rotation speed of the crank shaft is high, the rotors 26 rotate in the counter clockwise direction and the exhaust control valve 24 swings upward as shown in Fig. 1 (instead of rotation control of the rotors 26 using the governor, the rotation of the rotors 26 may be controlled by an exhaust control servo motor which is controlled by a control signal of a CPU for calculation based on a prescribed control map in response to reception of input signals such as rotation speed of the crank shaft, throttle opening, and suction pressure).

The embodiment shown in Fig. 1 and Fig. 2 is structured as described hereinbefore, operations described hereinafter are therefore performed.

In detail, because the engine is under no-load condition at the starting, the throttle valve not shown in the figures is opened, and though the engine rotation speed increases along Z-curve of Fig. 5 and Fig. 6 as the opening increases, the opening of the throttle valve is smaller than 8% and the engine rotation speed is lower than 5000, the recess 20 of the rotary valve body 19 is shielded from the combustion chamber 16, and the exhaust control valve 24 swings downward, thus the apparent compression ratio is switched to 8 because of reduction of the volume of the combustion chamber 16, the chocking starting timing of the exhaust outlet 13 during the up stroke of the piston is advanced, the opening starting timing of the exhaust outlet 13 during the down stroke of the piston is advanced, and such operations result in the condition that fresh is heated

sufficiently to a high temperature due to the adiabatic compression with high compression ratio even if the temperature of the combustion chamber is low, consequently, the active thermal environment combustion is promoted, emission of unburnt hydrocarbon is suppressed, and combustion is improved.

Under the normal operation condition while the throttle valve not shown in the figures is opened with the opening of larger than 8%, high load operation, or high speed operation condition exceeding engine rotation speed of 5000, the exhaust control valve 24 swings upward as shown in Fig. 1, the recess 20 of the rotary valve body 19 communicates to the combustion chamber 16 through the opening 21, and the volume of the combustion chamber 16 is expanded, as the result, the choking starting timing of the exhaust outlet 13 during up stroke of the piston 6 is delayed and the opening starting timing of the exhaust outlet 13 during the down stroke of the piston 6 is advanced, thus large quantity of gas is exchanged smoothly without knocking and output power is increased quietly.

In the conventional two-stroke internal combustion engine, around the idle setting point that the throttle opening is throttled to about 5%, the active thermal environment combustion is impossible in the two-stroke internal combustion engine with an apparent compression ratio of 6 and in the area the engine is apt to cause irregular combustion which generates emission containing large quantity of unburnt hydrocarbon, however, in the embodiment shown in Fig. 1 and Fig. 2, the apparent compression ratio is increased to 8 by closing the rotary valve body 19 as shown in Fig. 2, as the result, the active thermal environment combustion area is expanded from the area shown in Fig. 5 to the area shown in Fig. 6, thus the active thermal environment combustion is possible, fuel consumption is improved, and operational condition is stabilized.

A plurality of rotary valve bodies 19 with different volume of the recess 20 may be provided and opening-and-closing operated selectively in the embodiment

shown in Fig. 1 and Fig. 2, thereby the apparent compression ratio can be varied step-wise.

The volume of the combustion chamber 16 is varied by rotating the rotary valve body 19 in the embodiment shown in Fig. 1 and Fig. 2, but instead, a recess 28 communicating to the combustion chamber 16 is formed on the cylinder head 4 as shown in Fig. 3 and a shutter valve 30 opening-and-closing operated by a valve opening-and-closing operating means such as a solenoid not shown in the figures is provided on the opening 29 of the recess 28, and in the embodiment shown in Fig. 3, the embodiment shown in Fig. 3 provides the same effect as the embodiment shown in Fig. 1 and Fig. 2.

The combustion controller may be structured as shown in Fig. 4. In detail, a sub-cylinder hole 31 communicating to the cylinder hole 5 is formed on the cylinder head 4, a sub-piston 32 is inserted slidably in the sub-cylinder hole 31, the outer end of the sub-cylinder hole 31 is closed by a lid 33 to form an oil pressure chamber 34, and by supplying or discharging pressure oil to or from the oil pressure chamber 34, the volume of the sub-chamber 35 of the sub-cylinder 35, namely the volume of the combustion chamber 16, may be varied, this embodiment provides the same effect as the above-mentioned embodiments and also stepless variation of apparent compression ratio.

**Brief Description of the Drawings**

Fig. 1 is a vertical cross-sectional side view of an embodiment of a spark ignition two-stroke internal combustion engine having a combustion controller in accordance with the present invention under the normal operation condition.

Fig. 2 is a vertical cross-sectional side view of the embodiment of Fig. 1 under low load low speed operation condition.

Fig. 3 is a vertical cross-sectional view of a selected portion of another embodiment.

Fig. 4 is a vertical cross-sectional view of a selected portion of yet another embodiment.

Fig. 5 is a characteristic chart for describing the boundary between the active environment combustion area and normal combustion area while the rotary valve is opened under low load and low speed operation condition in the embodiment shown in Fig. 1 and Fig. 2.

Fig. 6 is a characteristic chart for describing the boundary between the active thermal environment combustion area and normal area while the rotary valve is closed in the embodiment shown in Fig. 1 and Fig. 2.

Fig. 7 is a control graph for describing the switching of the rotary valve in the embodiment shown in Fig. 1 and Fig. 2.

**Description of Reference Characters**

1 ... SPARK IGNITION TWO-STROKE INTERNAL COMBUSTION ENGINE
2 ... CRANK CASE
3 ... CYLINDER BLOCK
4 ... CYLINDER HEAD
5 ... CYLINDER HOLE
6 ... PISTON
7 ... CONNECTING ROD
8 ... CRANK SHAFT
9 ... CRANK CHAMBER
10 ... INTAKE PASSAGE
11 ... REED VALVE
12 ... SCAVENGING OPENING
13 ... EXHAUST OUTLET
14 ... SCAVENGING PASSAGE
15 ... EXHAUST PASSAGE
16 ... COMBUSTION CHAMBER

17 ... SPARK PLUG

18 ... CYLINDRICAL RECESS

19 ... ROTARY VALVE

20 ... RECESS

21 ... OPENING

22 ... VALVE BODY CONTAINING RECESS

23 ... SHAFT

24 ... EXHAUST CONTROL VALVE

25 ... FLAT SLOTTED HOLE

26 ... ROTOR

27 ... CONNECTING SHAFT

28 ... RECESS

29 ... OPENING

30 ... SHUTTER VALVE

31 ... SUB-CYLINDER

32 ... SUB-PISTON

33 ... LID

34 ... OIL PRESSURE CHAMBER

35 ... SUB-CHAMBER

**The claims defining the invention are as follows:**

1. A spark ignition two-stroke internal combustion engine having a combustion controller in which the passage opening area of the inlet of an exhaust passage or in said exhaust passage is controlled depending on at least the internal combustion engine rotation speed or throttle valve opening by operating an exhaust control valve so that fresh air and/or fuel mixture in a combustion chamber is self-ignition burnt during at least low load operation, wherein a combustion chamber volume adjusting means including a rotary valve which has a recess that communicates or not communicates to the combustion chamber through the opening to vary the compression ratio for varying the volume of said combustion chamber depending on operation condition of the internal combustion engine is provided.

2. A spark ignition two-stroke internal combustion engine having a combustion controller in which the passage opening area of the inlet of an exhaust passage or in said exhaust passage is controlled depending on at least the internal combustion engine rotation speed or throttle valve opening by operating an exhaust control valve so that fresh air and/or fuel mixture in a combustion chamber is self-ignition burnt during at least low load operation, wherein the self-ignition timing is made adjustable by varying the volume of said combustion chamber depending on operation condition of the internal combustion engine by a combustion chamber volume adjusting means including a rotary valve which has a recess that communicates or not communicates to the combustion chamber through the opening to vary the compression ratio.

3. A spark ignition two-stroke internal combustion engine having a combustion controller in which the passage opening area of the inlet of an exhaust passage or in said exhaust passage is controlled depending on at least the internal combustion engine rotation speed or throttle valve opening by operating an exhaust control valve so that fresh air and/or fuel mixture in a combustion chamber is self-ignition burnt during at least low load operation, wherein, outside the cylinder top of a

main combustion chamber, at least one sub-combustion chamber communicating to said main combustion chamber and an opening-and-closing means provided for opening-and-closing operating said main combustion chamber and sub-combustion chamber are provided, and said opening-and-closing means is operated depending on operational condition of the internal combustion engine so that self-ignition timing can be adjusted.

4. The spark ignition two-stroke internal combustion engine as claimed in claim 1 or claim 2, wherein, outside the cylinder top of a main combustion chamber, at least one sub-combustion chamber communicating to said main combustion chamber and opening-and-closing means for opening-and-closing operating said main combustion chamber and sub-combustion chamber are provided.

5. The spark ignition two-stroke internal combustion engine as claimed in claim 3, wherein said opening-and-closing means described in claim 3 comprises at least one rotary valve communicating to the main combustion chamber provided at the cylinder top, and said sub-combustion chamber described in claim 3 comprises the internal space in the rotary valve body of said rotary valve.

6. The spark ignition two-stroke internal combustion engine as claimed in claim 3, wherein said opening-and-closing means described in claim 3 is a poppet valve or shutter valve.

7. A spark ignition two-stroke internal combustion engine substantially as hereinbefore described with reference to the accompanying drawings.

**Dated 28 July, 1999**

**Honda Giken Kogyo Kabushiki Kaisha**

**Patent Attorneys for the Applicant/Nominated Person**

SPRUSON & FERGUSON



15765/97

FIG.1

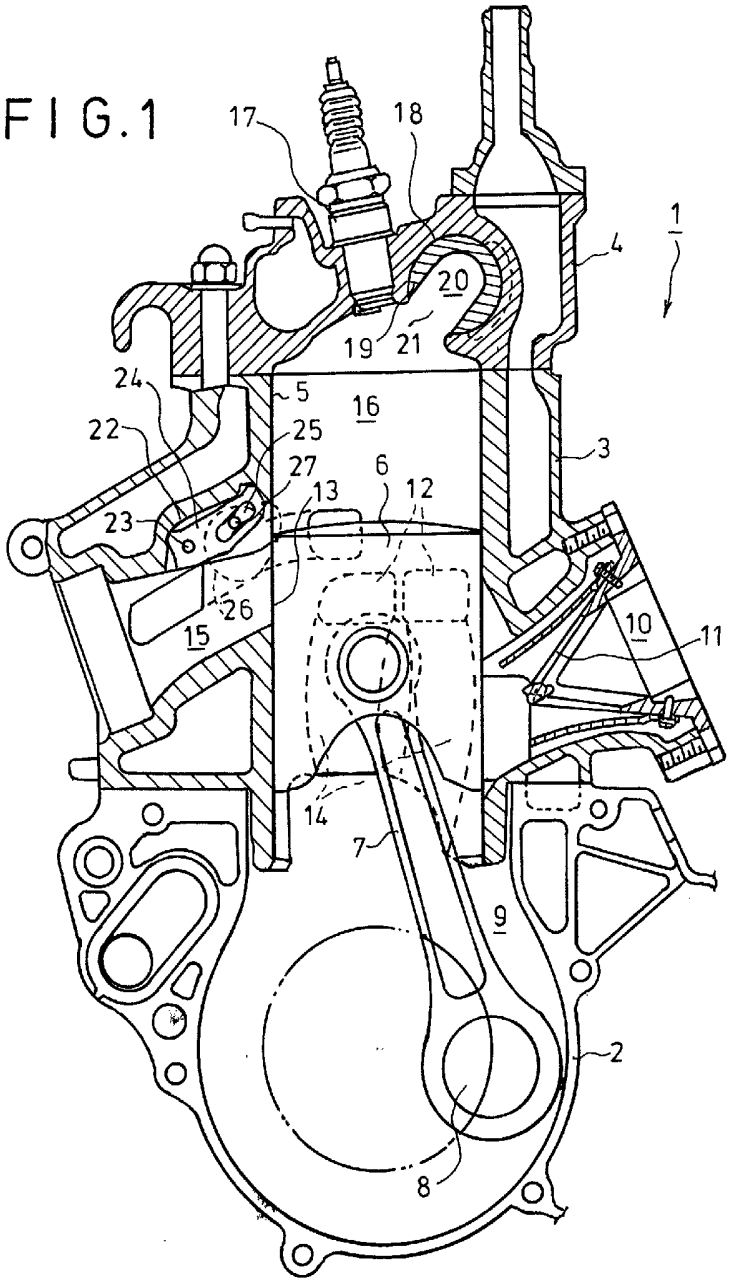

FIG. 2

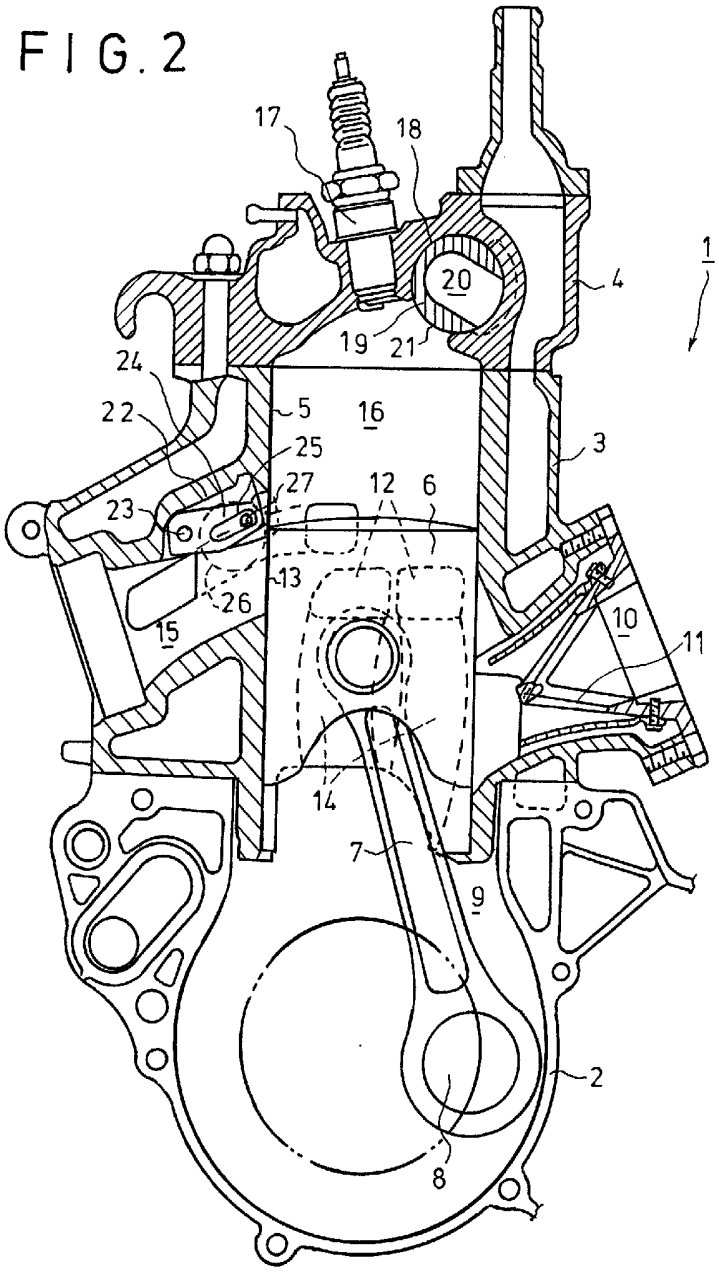

FIG.3

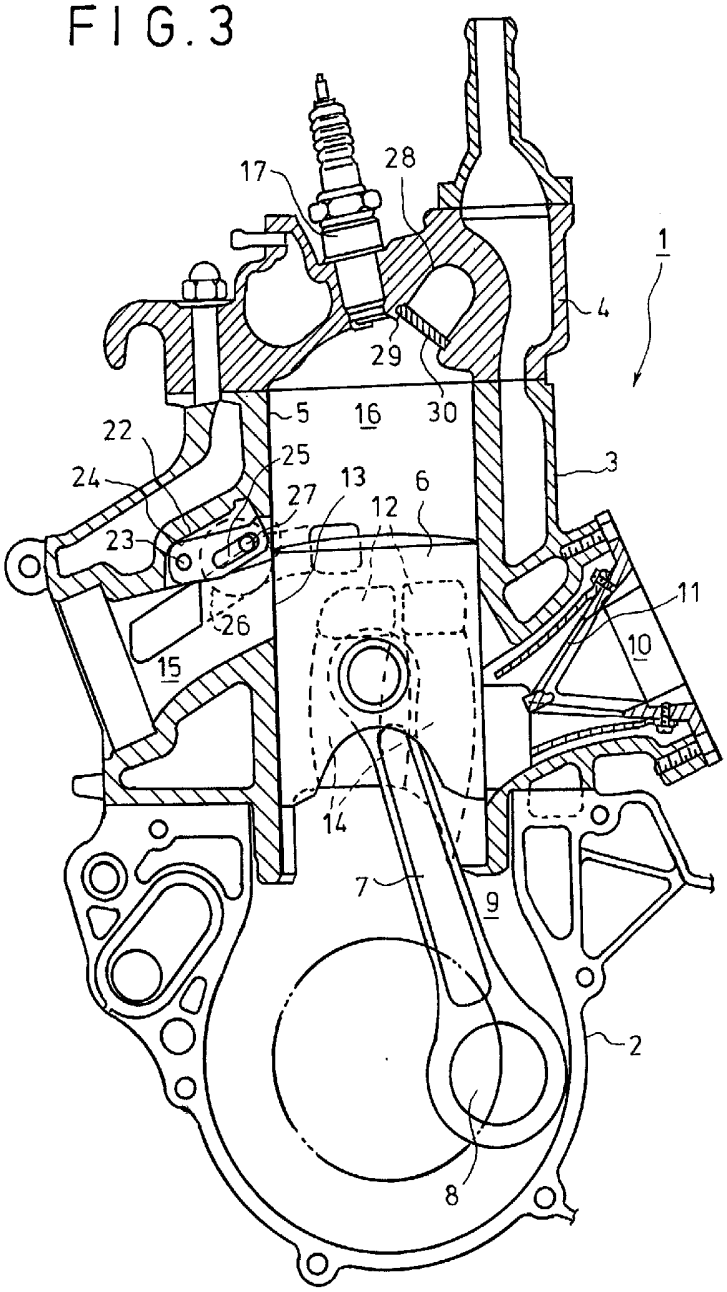

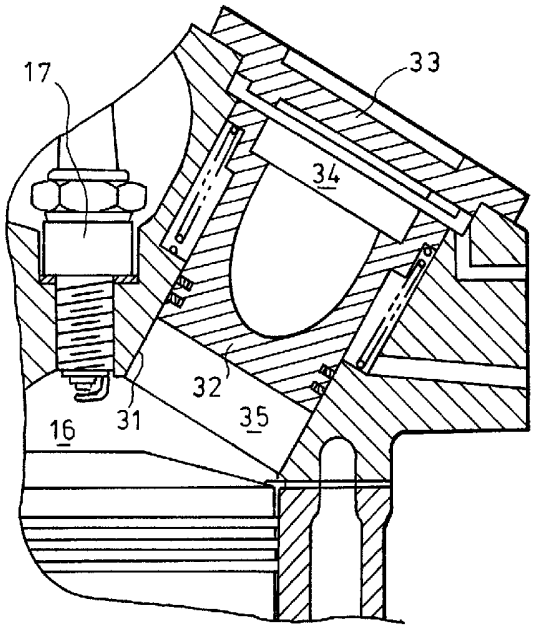


FIG.4

FIG.5

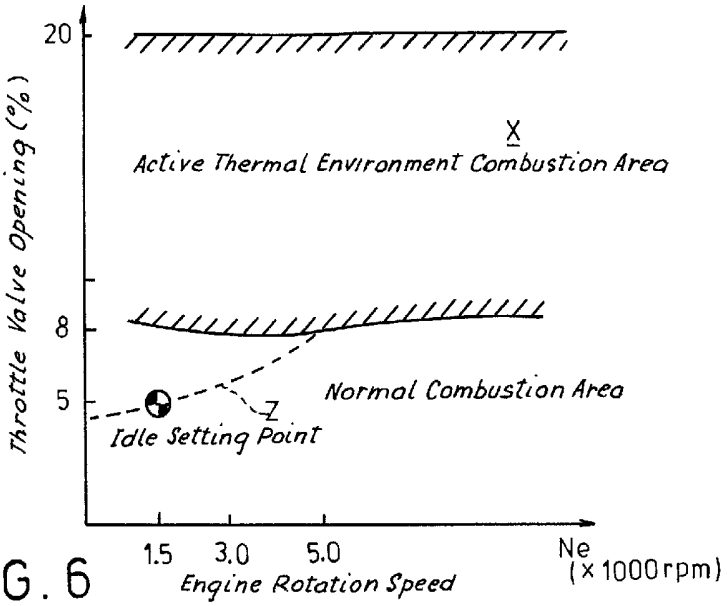
20
8
5
Throttle Valve Opening (%)
X
Active Thermal Environment Combustion Area
Normal Combustion Area
Z
Idle Setting Point
1.5
3.0
5.0
Ne
(x 1000rpm)
Engine Rotation Speed

FIG.6

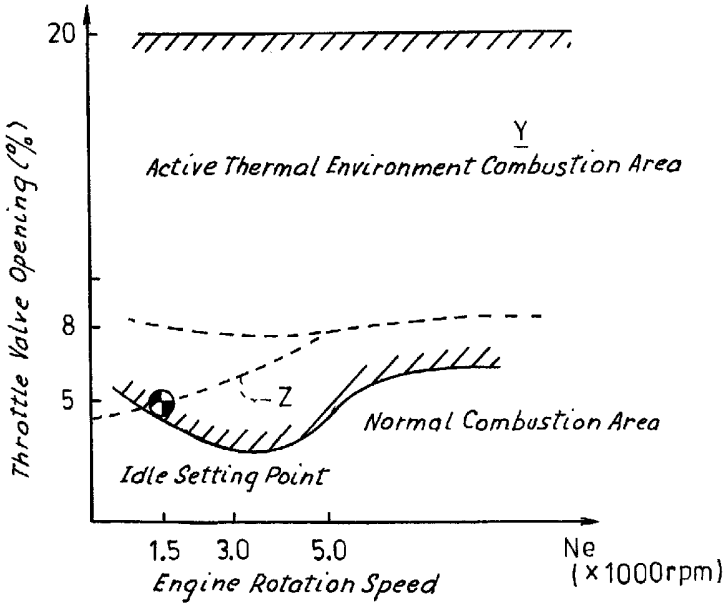
20
8
5
Throttle Valve Opening (%)
Y
Active Thermal Environment Combustion Area
Z
Normal Combustion Area
Idle Setting Point
1.5
3.0
5.0
Ne
(x 1000rpm)
Engine Rotation Speed

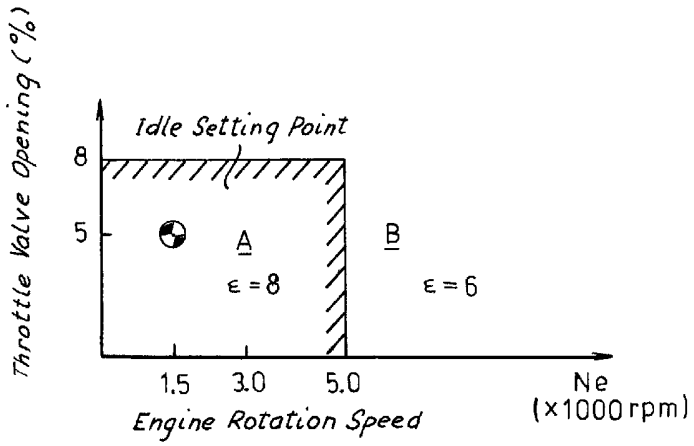
Throttle Valve Opening (%)
Idle Setting Point
8
5
A
ε = 8
B
ε = 6
1.5
3.0
5.0
Ne
(x1000 rpm)
Engine Rotation Speed

FIG. 7