(No Model.) 2 Sheets—Sheet 1.

J. TEUSCHER.

CLOTH SPONGING AND FINISHING MACHINE.

No. 590,731. Patented Sept. 28, 1897.

Fig. 1.

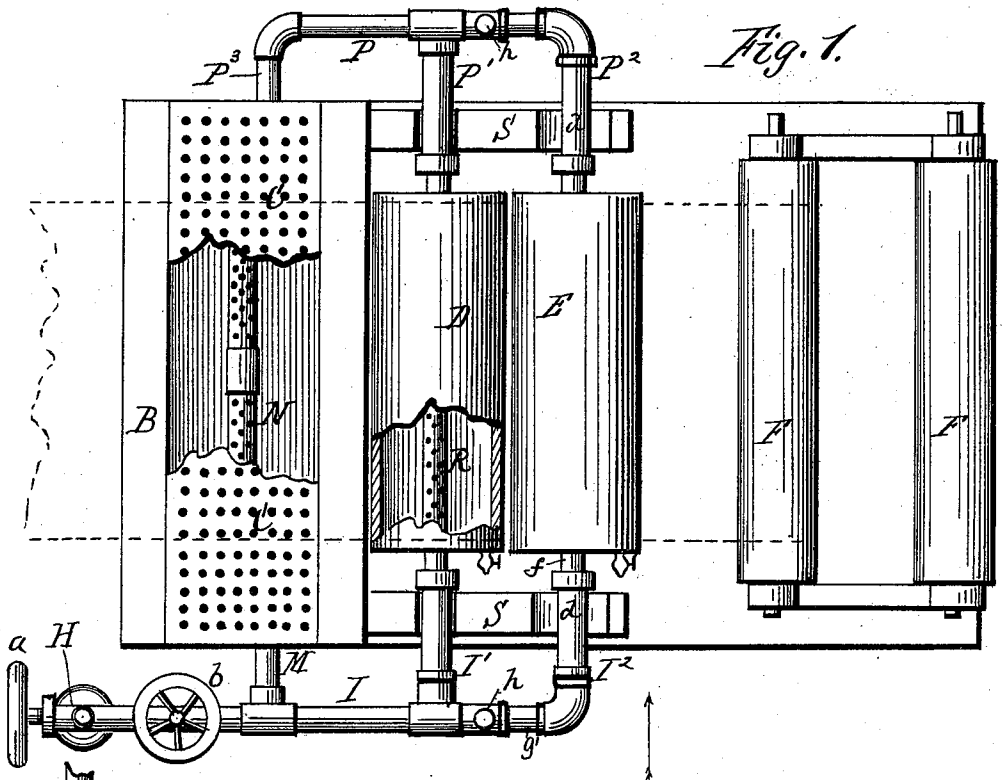

Fig. 2.

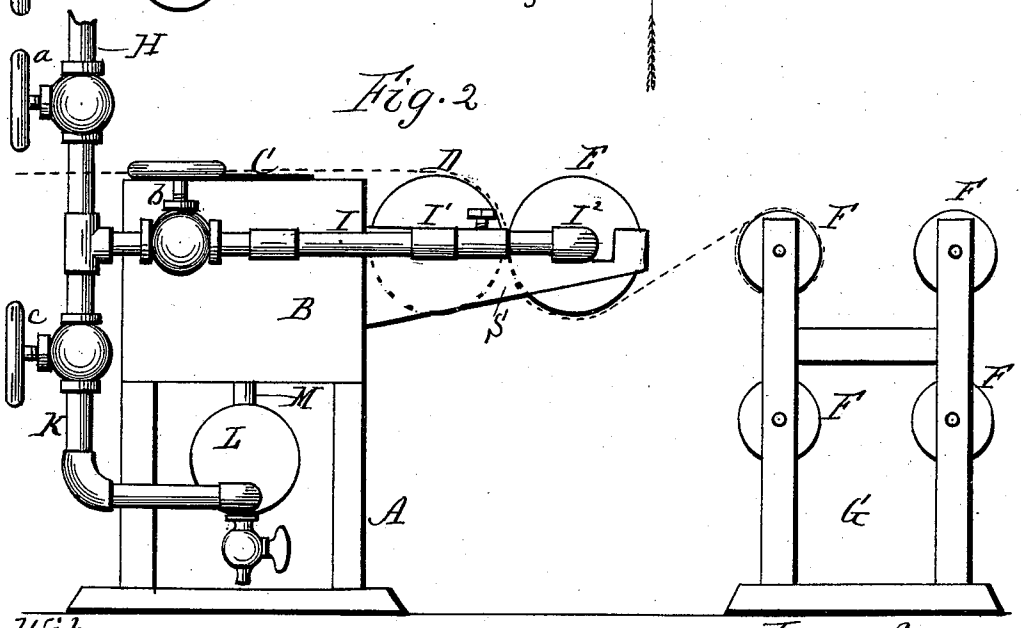

Witnesses.
J. Z. Culver
F. S. Hutchinson.

Inventor.
Joseph Teuscher,
per R. F. Osgood,
Atty.

THE NORRIS PETERS CO., PHOTO-LITHO., WASHINGTON, D. C.

(No Model.) 2 Sheets—Sheet 2.

J. TEUSCHER.

CLOTH SPONGING AND FINISHING MACHINE.

No. 590,731. Patented Sept. 28, 1897.

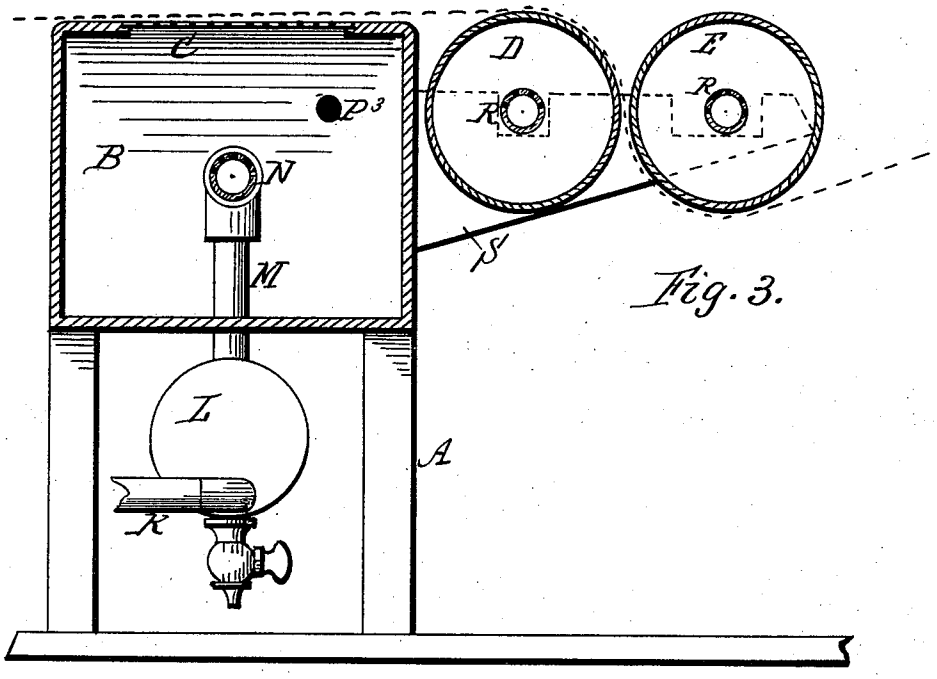

Fig. 3.

Fig. 4.

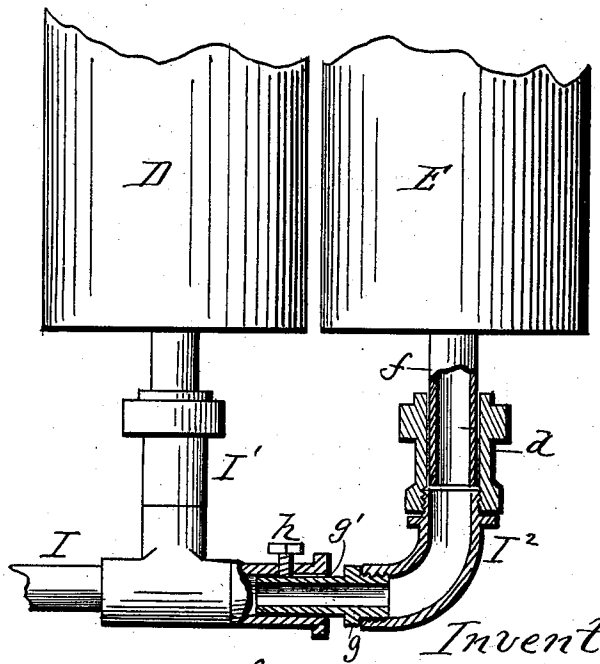

Witnesses.
J. Z. Culver
F. S. Hutchinson.

Inventor.
Joseph Teuscher,
per R. F. Osgood,
Atty.

THE NORRIS PETERS CO., PHOTO-LITHO., WASHINGTON, D. C.

UNITED STATES PATENT OFFICE.

JOSEPH TEUSCHER, OF ROCHESTER, NEW YORK.

CLOTH SPONGING AND FINISHING MACHINE.

SPECIFICATION forming part of Letters Patent No. 590,731, dated September 28, 1897.

Application filed October 2, 1895. Serial No. 564,455. (No model.)

To all whom it may concern:

Be it known that I, JOSEPH TEUSCHER, of Rochester, in the county of Monroe and State of New York, have invented a certain new and useful Improvement in Cloth Sponging and Finishing Machines; and I do hereby declare that the following is a full, clear, and exact description of the same, reference being had to the drawings accompanying this application.

My improvement relates to a cloth sponging and finishing machine in which the fabric runs over the perforated top of a steam-chest, by which it is shrunk, and then passes between steam-heated rollers, by which it is pressed and the surface finished.

The invention consists in the construction and arrangement of parts hereinafter described and claimed.

In the drawings, Figure 1 is a plan view of the machine, parts being broken away to show the interior construction. Fig. 2 is a side elevation of the same, looking in the direction of the arrow in Fig. 1. Fig. 3 is an enlarged longitudinal vertical section. Fig. 4 is an enlarged plan view of a part of the steam-rollers, a portion being in section, the design being to show the means for adjusting the outer roller to admit fabric of greater or less thickness.

A indicates the frame, on which is mounted a rectangular steam-chest B of sufficient length to receive the widest cloth over its top.

C is a cover to the steam-chest, having numerous perforations through which steam passes to reach the cloth, which runs over the top of the steam-chest.

D and E are two hollow rollers into which steam is admitted for heating them, said rollers being located side by side, with sufficient space for the cloth to pass between. The cloth passes over the top of the steam-chest, where it is saturated, then over the first roller and under the second, and is then wound on any one of a set of winding-rollers F F, located in an upright frame G. When one winding-roller is filled, the cloth is transferred to another. The first steam-roller D may be stationary or revoluble. The second one, E, however, must revolve, and special provision is made for this purpose, as well as to adjust it toward and from the other, as will presently be described.

H is a steam-pipe leading from the boiler to the machine and provided with the usual cut-off *a*.

I and K are two service-pipes connecting with pipe H, the pipe I connecting with the ends of the rollers by branches I' I^2 and supplying them with steam and the pipe K extending to a condenser L beneath the steam-chest.

From the condenser a pipe M extends up into the steam-chest and there communicates with a horizontal pipe N, closed at its ends and provided with perforations through which the steam escapes into the chest. The pipes I K are provided with cocks *b c*, by which the steam can be turned on or cut off from either pipe.

On the opposite side of the machine is a pipe P, provided with branches P' P^2, connecting with the ends of the rollers and with a branch P^3, opening into the steam-chest. The rollers have interior perforated pipes R R, similar to the perforated pipe N, forming connections with the branch pipes at opposite ends of the rollers, said perforated pipes discharging steam into the rollers.

By the means above described the steam passing through the condenser is practically free of water and enters the steam-chest through the perforated pipe N, where it is distributed equally throughout and passing through the perforated top of the steam-chest comes in contact with all parts of the cloth. Such of the steam as is allowed to pass through pipe I into the rollers passes through pipe P on the opposite side of the machine and escapes into the steam-chest with the other steam that comes from the condenser.

The rollers may be provided with small faucets at the ends to draw off the water of condensation..

As before stated, the outer roller E is so arranged as to revolve and to be adjusted out and in relatively to the other. The means for accomplishing this are as follows: The branch pipe I^2, leading from the roller E to the steam-pipe I, also the branch pipe P^2, leading from the opposite end of the roller to the pipe P, is made separate and distinct

from the other pipe and forms an independent elbow. The inner end of each of these branches has a hollow thimble *d*, in which runs loosely a hollow open-ended journal *f*, Fig. 4, of the roller, which permits the roller to revolve freely and still receive steam from the pipe. The opposite or outer end of the elbow I^2 has a hollow nipple *g* screwed therein, provided with a projecting smooth end *g'*, that slides in the open end of the pipe I and is secured by a set-screw *h*. By this means the roller can be adjusted forward and back.

Since both elbows are alike, the roller can be adjusted accurately at both ends. This adjustment is necessary to receive cloth of different thicknesses between the rollers and give the desired finish to any thickness. This adjustment is made, also the rotary motion of the roller is allowed, by the use of the elbows alone, said elbows forming a part of the steam-pipes and without any other appliances. The rollers simply rest on brackets S S, so arranged as to permit the adjustment of the outer roller.

It should be stated that the outer roller has no rotary motion except such as is imparted to it by the cloth as it is drawn over. The inner roller may also be made to revolve by fitting its journals loosely in hollow bearings of the pipe like the outer one.

Having described my invention, what I claim as new, and desire to secure by Letters Patent, is—

1. In a cloth-sponging machine, the combination with the adjustable roller E provided with the hollow journal *f*, of the branch pipe I^2 the hollow thimble *d* screwed on one of its ends and forming a bearing for the journal, the nipple *g* attached at the opposite end of the branch pipe and provided with a straight tubular end that enters the end of the main pipe I, and the set-screw *h*, the whole so arranged that the roller can turn and can be set fast at any adjustment forward or back, as herein shown and described.

2. In a cloth-sponging machine, the combination, with the perforated steam-chest B, and hollow rollers D E, of the two pipes I and P located respectively on opposite sides of the machine, the branch pipe P^3 connecting the main pipe P with the end of the steam-chest, the two sets of branch pipes I' I^2 and P' P^2 on the opposite side of the machine and the pipes *f* R extending through the hollow rollers and connecting the two main pipes, whereby a circuit is maintained and the steam that is carried through the rollers is discharged into the steam-chest, as herein shown and described.

In witness whereof I have hereunto signed my name in the presence of two subscribing witnesses.

JOS. TEUSCHER.

Witnesses:
R. F. OSGOOD,
GEO. A. GILLETTE.