(12) INTERNATIONAL APPLICATION PUBLISHED UNDER THE PATENT COOPERATION TREATY (PCT)

(19) World Intellectual Property Organization
International Bureau

(43) International Publication Date
11 May 2017 (11.05.2017)

WIPO | PCT

(10) International Publication Number
WO 2017/076845 A1

(51) International Patent Classification:
A61M 5/14 (2006.01) *A61M 39/22* (2006.01)
A61M 5/168 (2006.01)

(21) International Application Number:
PCT/EP2016/076320

(22) International Filing Date:
2 November 2016 (02.11.2016)

(25) Filing Language: English

(26) Publication Language: English

(30) Priority Data:
15193177.1 5 November 2015 (05.11.2015) EP

(71) Applicant: **FRESENIUS KABI DEUTSCHLAND GMBH** [DE/DE]; Patent Department, Medical Devices Division, Else-Kröner-Straße 1, 61352 Bad Homburg (DE).

(72) Inventor: **PÜTTER, Harry**; Lüderberg 16, 36364 Bad Salzschlirf (DE).

(74) Agent: **KUSCHE, Robert**; Else-Kröner-Str. 1, 61352 Bad Homburg (DE).

(81) Designated States *(unless otherwise indicated, for every kind of national protection available)*: AE, AG, AL, AM, AO, AT, AU, AZ, BA, BB, BG, BH, BN, BR, BW, BY, BZ, CA, CH, CL, CN, CO, CR, CU, CZ, DE, DJ, DK, DM, DO, DZ, EC, EE, EG, ES, FI, GB, GD, GE, GH, GM, GT, HN, HR, HU, ID, IL, IN, IR, IS, JP, KE, KG, KN, KP, KR, KW, KZ, LA, LC, LK, LR, LS, LU, LY, MA, MD, ME, MG, MK, MN, MW, MX, MY, MZ, NA, NG, NI, NO, NZ, OM, PA, PE, PG, PH, PL, PT, QA, RO, RS, RU, RW, SA, SC, SD, SE, SG, SK, SL, SM, ST, SV, SY, TH, TJ, TM, TN, TR, TT, TZ, UA, UG, US, UZ, VC, VN, ZA, ZM, ZW.

(84) Designated States *(unless otherwise indicated, for every kind of regional protection available)*: ARIPO (BW, GH, GM, KE, LR, LS, MW, MZ, NA, RW, SD, SL, ST, SZ, TZ, UG, ZM, ZW), Eurasian (AM, AZ, BY, KG, KZ, RU, TJ, TM), European (AL, AT, BE, BG, CH, CY, CZ, DE, DK, EE, ES, FI, FR, GB, GR, HR, HU, IE, IS, IT, LT, LU, LV, MC, MK, MT, NL, NO, PL, PT, RO, RS, SE, SI, SK, SM, TR), OAPI (BF, BJ, CF, CG, CI, CM, GA, GN, GQ, GW, KM, ML, MR, NE, SN, TD, TG).

[Continued on next page]

(54) Title: TUBE SET FOR ADMINISTERING A MEDICAL FLUID TO A PATIENT

FIG 3C

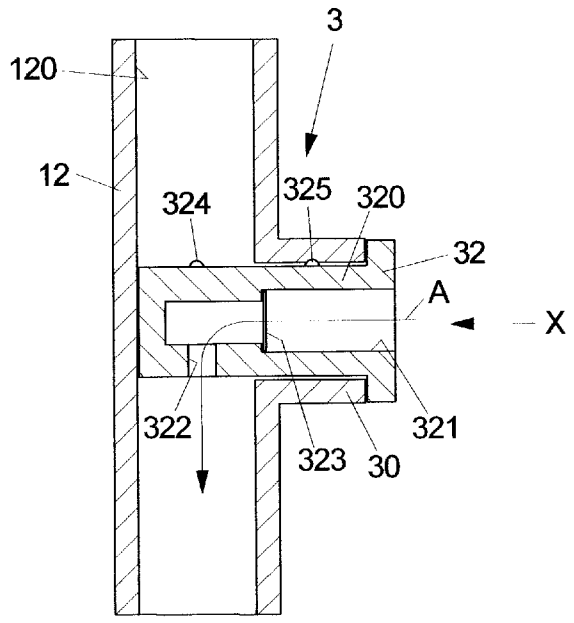

(57) Abstract: A tube set (1) for administering a medical fluid (M) from a container (2) to a patient (P) comprises a drip chamber (11) connectable to the container (2) and comprising an inner volume (112) for receiving a fluid, an outlet port (111) allowing a fluid flow (F) out of the inner volume (112) and a membrane (110) separating the inner volume (112) from the outlet port (111), the membrane (110) being constituted to hinder an air flow from the inner volume (112) towards the outlet port (111). A tube (12) is connected to the outlet port (111) and forms a flow channel (120) for guiding the fluid flow (F) towards the patient (P). A venting device (3) is arranged downstream of the membrane (110) and is actuatable to allow, in an actuated state, an air flow (A) into the tube (12). Herein, the venting device (3), in the actuated state, closes the flow channel (120) of the tube (12) such that the fluid flow (F) from the drip chamber (11) through the tube (12) is blocked. In this way, a tube set is provided which in an easy and reliable manner allows a venting of a tube in order to allow an air flow into the tube.

WO 2017/076845 A1

Published:

— *with international search report (Art. 21(3))*

Tube set for administering a medical fluid to a patient

Description

The invention relates to a tube set for administering a medical fluid from a container to a patient according to the preamble of claim 1.

A tube set of this kind comprises a drip chamber connectable to the container and comprising an inner volume for receiving a fluid, an outlet port for allowing a fluid flow out of the inner volume and a membrane separating the inner volume from the outlet port. The membrane herein is constituted to hinder an air flow from the inner volume towards the outlet port. A tube is connected to the outlet port and forms a flow channel for guiding the fluid flow from the outlet port towards the patient.

Within a tube set of this kind, a drip chamber is used to obtain a constant flow rate for administering a medical fluid, for example a medication or a parenteral feeding solution, to a patient. As it is described for example in US 4,198,971, a drip chamber may comprise a discharge opening having a drop-forming orifice for forming drops of a predetermined size. From the drop-forming orifice the drops fall into an inner volume of the drip chamber, and through the outlet port of the drip chamber exit from the inner volume and pass through the tube connected to the outlet port to be infused into the patient.

Generally, when a container (from which the medical fluid is to be administered to the patient) is empty, it shall be avoided that air enters through the drip chambers and the

tube into the patient. For this reason, within the drip chamber a membrane is provided which is constituted to hinder an air flow from the inner volume of the drip chamber through the outlet port once the container connected to the drip chamber is empty and the inner volume of the drip chamber has been depleted. A membrane of this kind may, for example as described in US 4,198,971, have a mean pore size equal to or smaller than a predefined value, for example 8 µm. A membrane of this kind will allow a liquid to pass, but when wet will not pass air under normal pressures involved for example in an intravenous administration.

A membrane of this kind reliably prevents air to enter the tube connected to the drip chamber. Hence, even though a container is empty, no air may pass through the drip chamber into the tube and towards the patient, thus improving the safety of the patient.

This, however, comes with the drawback that medicational fluid will remain in the tube once the container is emptied. Particular in those cases in which it may be crucial that an exact dosage is administered to a patient or for expensive medications, it may be desired to administer the complete medical fluid from the container to the patient. For this reason, US 4,198,971 proposes to use a vent cap on the drip chamber downstream of the membrane to allow an air flow into the tube such that, when the cap is open, the tube may be emptied and the medical fluid contained in the tube may be administered to the patient.

It is an object of the instant invention to provide a tube set which in an easy and reliable manner allows a venting of a tube in order to allow an air flow into the tube.

This object is achieved by means of a tube set comprising the features of claim 1.

Accordingly, the tube set comprises a venting device arranged downstream of the membrane and being actuatable to allow, in an actuated state, an air flow into the tube. Herein, the venting device, in the actuated position, closes the flow channel of the tube such that the fluid flow from the drip chamber through the tube is blocked.

The venting device serves to allow an air flow into the tube such that a residual medical fluid contained in the tube may exit from the tube and may be administered to a patient even after a container has been emptied and hence no (further) medical fluid passes through the membrane within the drip chamber. The venting device, for this, may be actuated from its non-actuated state, in which a fluid may pass the venting device and

may flow through the tube towards the patient, into its actuated state, in which air may enter the tube, but the flow channel within the tube is closed such that no further fluid may pass the venting device and may flow from the drip chamber through the flow channel of the tube towards the patient. Once the venting device is actuated, hence, air may flow into the tube, but no further medical fluid may pass the venting device. At the location of the venting device the flow channel, hence, is closed such that the fluid path between the drip chamber and the patient is interrupted.

This has a number of benefits.

For example, when the venting device remains in the actuated state and cannot be reverted to its non-actuated state without further ado, the tube set may not be connected to another container. In particular, if the tube set is constituted as a disposable tube set which is meant to be used only once, this may provide a safety feature hindering a user, for example a nurse, to use the disposable tube set on multiple containers for multiple infusion operations. This benefit arises in particular if the actuation of the venting device is irreversible, i.e., if the venting device remains in its actuated position and cannot be reversed to its non-actuated position once it has been actuated.

Another benefit is that, once the venting device is actuated, an air flow entering through the venting device into the tube and a fluid flow originating from the drip chamber and passing the venting device cannot mix with each other, hence preventing the generation of air bubbles within the fluid flow in the tube. Once the venting device is actuated, air flows into the tube in a defined manner and allows the residual medical fluid downstream of the venting device to exit from the tube for administration to the patient, but no further medical fluid can pass the venting device.

In one embodiment, the venting device comprises an air inlet member and an actuation element arranged displaceably on the air inlet member. The actuation element, in the non-actuated state of the venting device, is constituted such that fluid may pass the venting device and, hence, may flow from the drip chamber through the flow channel of the tube towards the patient. In the actuated state of the venting device, in contrast, the actuation element closes the flow channel such that the fluid flow through the venting device is blocked and the fluid path from the drip chamber through the flow channel towards the patient is interrupted. In the actuated state, hence, no further fluid may flow from the drip chamber through the flow channel of the tube towards the patient, but only

the residual fluid downstream of the venting device may exit the tube and may administered to a patient.

The actuation element, in a one embodiment, comprises a shaft being guided on the air inlet member. In the non-actuated state, the shaft does not substantially extend into the flow channel of the tube such that the flow channel is not blocked. In the actuated state of the venting device, in contrast, the shaft reaches into the flow channel of the tube such that the flow channel is closed at the location of the venting device and no fluid may pass the venting device.

The actuation element may, for example, comprise an opening which is constituted to allow air to flow into the flow channel in the actuated state of the venting device. By actuating the actuation element, the opening of the actuation element comes into fluid connection with the flow channel of the tube such that a flow path between the outside atmosphere and the flow channel is provided, allowing air to flow into the flow channel. If the actuation element is not actuated and the venting device hence is in its non-actuated state, the opening is closed such that the flow channel is not opened towards the outside atmosphere and no air may pass from the outside into the flow channel. In the non-actuated state of the venting device fluid can pass through the flow channel of the tube without air entering into the tube through the venting device.

In one embodiment, a filter element may be arranged in the opening in order to filter air flowing through the opening. The filter element may in particular be constituted as an (hydrophobic) bacteria filter for filtering out bacteria in the air flow passing through the opening.

The actuation element may be actuated to transfer the venting device from its non-actuated state into its actuated state by displacing the actuation element, for example, in a venting direction with respect to the air inlet member. The venting direction, in one embodiment, is, for example, directed transverse to the longitudinally extending flow channel formed within the tube. The actuation element, hence, can be displaced with respect to the tube in a transverse direction, such that, for example, the shaft of the actuation element can be moved into the flow channel to block the flow channel and to open the flow channel downstream of the venting device towards the outside atmosphere.

The actuation of the actuation element may be reversible or may be irreversible. If the actuation of the actuation element is reversible, the actuation element may be actuated to transfer the venting device into its actuated state, and may be reversed by a user to reverse the venting device into its non-actuated state. If the venting device is irreversible, the actuation element may be actuated to transfer the venting device from its non-actuated state into the actuated state, but may not be reversed without further ado by a user such that the actuation element remains in the position it assumes when the venting device is in the actuated state.

In a first variant, the actuation element is reversible for transferring the venting device from the actuated state into the non-actuated state by displacing the actuation element in a reverse direction opposite the venting direction. A user can, hence, act onto the actuation element to reverse it to transfer the venting device back its non-actuated state.

For this, the actuation element may, for example, protrude from the air inlet member towards a first side, when the venting device is in the non-actuated state. Hence, by pushing the actuation element in the venting direction into the air inlet member, the venting device can be transferred from its non-actuated state into the actuated state. In the actuated state, then, the actuation element may protrude from the air inlet member towards a second side opposite the first side, allowing a user to push the actuation element into the air inlet member in the opposite reverse direction to transfer the venting device back from its actuated state into the non-actuated state.

In another aspect, the venting device may comprise a spring element for pre-tensioning the actuation element towards a position corresponding to the non-actuated state of the venting device. The actuation element, hence, is pre-tensioned towards its non-actuated position and, hence, without actuating the actuation element, remains in the non-actuated position or, after actuation, reverses back to the non-actuated position. This has the benefit that the actuation element will automatically reverse back to its non-actuated position if a user no longer pushes onto the actuation element for actuating the venting device. Hence, air is allowed to flow into the tube only as long as a user (deliberately) actuates the venting device. Once the user releases the venting device, the venting device automatically resumes into its non-actuated state such that no further air can pass into the tube.

In a second variant, the actuation of the actuation element is irreversible. In this case, the venting device may, for example, comprise one or multiple locking members for

locking the actuation element in a position corresponding to the actuated state of the venting device. Hence, once the actuation element has been actuated to transfer the venting device from its non-actuated state into the actuated state, the actuation element remains in its position and cannot, without further ado, be reversed by a user. This has the advantage that, in particular if the tube set shall be disposed after a one-time use, a user may not without further ado reuse the tube set on another container to perform another infusion operation, but is forced to dispose the tube set, because the actuated actuation element (which blocks the flow pass through the flow channel of the tube) renders the tube set useless.

The object is also achieved by means of a tube set having a venting device arranged downstream of the membrane and being actuatable to allow, in an actuated state, an air flow into the tube. Herein, the venting device comprises an air inlet member having an opening formed therein for allowing an air flow into the flow channel, the opening, in a non-actuated state of the venting device, being covered by a cover element fixedly bonded to the air inlet, wherein the cover element, for actuating the venting device to allow an air flow into the tube, is removable from the air inlet member to uncover the opening.

This originates from the idea to provide a cover element on an air inlet member of the venting device which may be (irreversibly) removed from the air inlet member such that, when it is removed, an opening in the air inlet member is uncovered and air may pass through the opening into the tube. The cover element is fixedly bonded to the air inlet member in an original, non-actuated state of the venting device. For actuating the venting device to allow air to flow into the tube the cover element may be peeled off from the air inlet member and in this way may be removed to uncover the opening.

The cover element may, for example, have the shape of an aluminum cap, made for example from an aluminum foil.

A venting device of this kind may be fabricated in a very cheap manner, but yet may offer a reliable operation. Because the cover element is irreversibly removed from the air inlet member or at least may be pierced or destroyed in another way for actuating the venting device, an immediate indication that a tube set has already been used is provided, hence signaling to the user to dispose the tube set.

The cover element, in the non-actuated state, may, for example, be welded or glued to the air inlet member. In the non-actuated state the opening is covered by the cover element in an air-tight manner such that no air may pass through the opening into the tube.

In one embodiment, a filter element may be provided within the opening to filter air flowing through the opening into the tube. The filter element may, for example, be a (hydrophobic) bacteria filter constituted to remove bacteria from the air flowing into the tube.

Generally, in all of the embodiments described above, a venting device may be arranged on different positions on the tube set. Generally, the venting device may, for example, be arranged on the tube, or it may be integrated into the drip chamber downstream of the membrane of the drip chamber. By integrating the venting device into the drip chamber and by arranging it immediately downstream of the membrane, it can be ensured that the entire residual fluid downstream of the membrane can be administered to the patient by venting the tube once the container connected to the drip chamber is empty.

The idea of the invention shall subsequently be described in more detail with respect to the embodiments shown in the figures. Herein:

Fig. 1 shows a schematic drawing of a tube set connected to a container;

Fig. 2A shows a perspective view of a first embodiment of a venting device;

Fig. 2B shows a sectional view along line I-I as illustrated in Fig. 2A;

Fig. 2C shows the sectional view of Fig. 2B, in a slightly modified embodiment;

Fig. 3A shows a perspective view of another embodiment of a venting device;

Fig. 3B shows a sectional view along line I-I as illustrated in Fig. 3A, in a non-actuated state of an actuation element;

Fig. 3C shows the sectional view of Fig. 3B, in an actuated state of the actuation element;

Fig. 4A shows a perspective view of another embodiment of a venting device;

Fig. 4B shows a sectional view along line I-I as illustrated in Fig. 4A;

Fig. 5A shows a sectional view of another embodiment of a venting device, in a non-actuated state of an actuation element;

Fig. 5B shows the sectional view of Fig. 5A, in an actuated state of the actuation element; and

Fig. 6 shows a schematic view of a drip chamber with a venting device integrated therein.

Fig. 1 shows a schematic drawing of an arrangement which is, for example, used to infuse a medical fluid, such as a medicational liquid or a parenteral solution into a patient P. The medical fluid M is contained in a container 2, for example, in the shape of a flexible bag, a bottle or the like. A tube set 1, via a spike 10 of a drip chamber 11, is connected to an outlet port 20 of the container 2 and comprises a tube 12 extending from an outlet port 111 of the drip chamber 11 to a port 14, which is connected, for example, to a needle or the like for providing for example an intravenous access to the patient P.

The drip chamber 11, via the spike 10, is in fluid connection to the container 2. The drip chamber 11 comprises a drop-forming orifice for forming drops, which enter into an inner volume 112 of the drip chamber 11 and are collected in the inner volume 112. The inner volume 112 is separated from the outlet port 111 of the drip chamber 11 via a membrane 110 which serves as an air stop. The membrane 110, for this, is constituted such that a liquid can pass the membrane 110 substantially without a pressure drop across the membrane 110, but is prevented from passing the membrane 110 when the membrane 110 is wet. The membrane 110 may, for example, have a mean pore size not larger than 8 µm or the like.

By means of the membrane 110 it is achieved that no air enters into the tube 12 once the container 2 is emptied such that the infusion process comes to an automatic end.

A roller clamp 13 is arranged on the tube 12 to be able to adjust the flow rate of the fluid flow through the tube 12.

In addition, a venting device 3 is arranged on the tube 12 which serves to allow a venting of the tube 12. By means of the venting device 3 it is possible to let a residual fluid in the tube 12 flow out of the tube 12 towards the patient P after the container has been emptied. The venting device 3 allows air to flow into the tube 12 such that the residual fluid in the tube 12 downstream of the venting device 3 can flow of the tube 12 and can be administered to the patient P.

The venting device 3 allows to empty the tube 12 at the end of an infusion process, i.e. after the container has been emptied. This, in particular, is useful if for the infusion of a particular medication or the like it is crucial that an exact dosage is administered to the patient. This also is useful if a medication or the like is expensive, such that excessive waste of medication shall be avoided.

A first embodiment of a venting device 3 is shown in Fig. 2A and 2B. The venting device 3 comprises an air inlet member 30 in the shape of a tube section extending from the tube 12 and forming an opening 300 providing an access to a flow channel 120 formed by the tube 12. Within the embodiment of Fig. 2A and 2B, the opening 300 of the air inlet member 30, in a non-actuated state of the venting device 3, is covered by a cover element 31, for example in the shape of a removable cap or seal such as an aluminum cap made for example from an aluminum foil. The cover element 31 is bonded to the air inlet member 30 such that, in the non-actuated state of the venting device 3, the opening 300 is sealed towards the outside in an air-tight manner.

In the non-actuated state, a fluid flow passes through the flow channel 120 of the tube 12 from the drip chamber 11 towards the patient P. Because the opening 300 is sealed by the cover element 31, no air may flow into the flow channel 120 through the opening 300 of the air inlet member 30.

To transfer the venting device 3 into an actuated state in order to allow air to flow into the flow channel 120, for example after the container 2 has been emptied, the cover element 31 can be removed from the air inlet member 30 by gripping the cover element 31 on a grip member 310 and by peeling the cover element 31 of the air inlet member

30. Alternatively, the cover element 1 could be pierced or destroyed in another way such that air may flow through the opening 300 into the flow channel 120.

The removal of the cover element 31 is irreversible such that the tube set 1 cannot be reused for example on another container after the cover element 31 has been removed. The removal of the cover element 31, hence, provides a unique indication that the tube set 1 has been used and should be disposed.

Fig. 2C shows a modification of the embodiment of Fig. 2A and 2B. In this modification a filter element 311 in the shape of a bacteria filter is arranged within the opening 300 and separates the opening 300 from an adjoining opening 301 providing access to the flow channel 120. The filter element 311 serves to remove bacteria from air flowing into the opening 300 towards the flow channel 120 such that the air is filtered prior to entering into the flow channel 120. Other than that the functionality of this embodiment is identical to the functionality of the embodiment of Fig. 2A and 2B, such that it shall be referred to the above.

In another embodiment shown in Fig. 3A to 3C a venting device 3 comprises an actuation element 32 which is arranged displaceably, along a venting direction X, on an air inlet member 30 in the shape of a tube section extending from the tube 12. The actuation element 32 comprises a shaft 320 guided within an opening 300 of the air inlet member 30, wherein an opening 321 is formed within the shaft 320 and is adjoined by an opening 322 for allowing air to flow into the flow channel 120 downstream of the venting device 3, as shall be described below.

The actuation element 32, in a non-actuated state as shown in Fig. 3B, protrudes from the air inlet member 30 and is arranged such that the shaft 320 substantially does not reach into the flow channel 120 formed in the tube 12. In this non-actuated position the actuation element 32 is held via a locking member 324 in a form-locking manner on the air inlet member 30, the locking member 324 being formed for example by a protrusion protruding from the shaft 320 in a direction pointing radially outwards and reaching into a corresponding recess on the inner circumferential wall of the opening 300 formed in the air inlet member 30.

By means of the locking member 324, the actuation element 32 assumes a defined position when the venting device 3 is in its non-actuated state (Fig. 3B). In this non-

actuated state, a fluid flow F can pass through the flow channel 120 formed in the tube 12 from the drip chamber 11 towards the patient P.

To actuate the venting device 3, the actuation element 32 can be pushed into the air inlet member 30 in the venting direction X, as it is indicated in Fig. 3C. In the actuated position, the actuation element 32, with its shaft 320, reaches into the flow channel 120 formed in the tube 12 such that the flow channel 120 is closed at the location of the venting device 3 and a fluid flow F stemming from the drip chamber 11 is blocked at the location of the venting device 3. Instead, via the openings 321, 322 an air flow A is allowed to pass into the flow channel 120 of the tube 12 downstream of the venting device 3, such that air can enter into the flow channel 120 and residual fluid downstream of the venting device 3 can exit the tube 12 and can be administered to the patient P.

A second locking member 325 is provided on the shaft 320 and locks the actuation element 32 in its actuated position (Fig. 3C), such that the actuation element 32 cannot be reversed from the actuated position into the non-actuated position without further ado. In particular, a user, for example a nurse, cannot easily grip the actuation element 32 to pull it out of the air inlet member 30.

Within the opening 321, a filter element 323 is arranged which is constituted by a bacteria filter to remove bacteria from air flowing into the flow channel 120.

Fig. 4A and 4B show a modification of the embodiment according to Fig. 3A to 3C. In the embodiment of Fig. 4A and 4B, an additional spring element 326 is provided which is arranged in-between the actuation element 32 and the air inlet member 30, in particular a head section 327 of the actuation element 32 and an end face of the air inlet member 30 facing away from the tube 12. The spring element 326 is shaped as a push spring such that the actuation element 32 is pre-tensioned towards the non-actuated position.

As it has been described above for the embodiment of Fig. 3A to 3C, by pushing the actuation element 32 into the venting direction X into the air inlet member 30 the venting device 3 can be actuated such that a fluid flow F through the flow channel 120 is blocked, and an air flow A is allowed to enter through the openings 321, 322 into the flow channel 120 downstream of the venting device 3. In contrast to the embodiment of Fig. 3A to 3C, however, the actuation element 32 is not locked in either the non-actuated position or the actuated position, but is automatically reversed after a user stops actuating the actuation element 32. In particular, a user may push the actuation

element 32 in the venting direction X such that the shaft 320 is pushed into the flow channel 120 and blocks the flow channel 120, allowing an air flow into the flow channel. Once the user releases the actuation element 32, however, the actuation element 32 automatically is reversed into its non-actuated position (Fig. 4B) by means of the spring element 326 such that no more air can flow into the flow channel 120.

In the embodiment Fig. 5A and 5B, an actuation element 32 is provided which comprises a shaft 320 guided in an air inlet member 30 and reaching through the flow channel 120 into a section 302 of the air inlet member 30 at the other, opposite side of the tube 12. The shaft 320 comprises an opening 328 extending transversely through the shaft 320 and, in an non-actuated position of the actuation element 32, allowing a fluid flow F from the drip chamber 11 through the flow channel 120 towards the patient P, as indicated in Fig. 5A.

In the non-actuated position, the actuation element 32 protrudes with its head section 327 from the air inlet member 30. The actuation element 32 can be pushed in the venting direction X into the air inlet member 30 to transfer the venting device 3 from its non-actuated state into its actuated state such that in the actuated position of the actuation element 32 openings 321, 322 formed in the shaft 320 provide an access to the flow channel 120 of the tube 12 such that an air flow A may flow from the outside atmosphere into the flow channel 120 downstream of the venting device 3, as indicated in Fig. 5B.

In the actuated position of the actuation element 32, the shaft 320 is moved within the air inlet member 30 such that the opening 328 is displaced with respect to the flow channel 120 and is arranged within the section 302 at the opposite side of the tube 12. Hence, a fluid flow F through the flow channel 120 stemming from the drip chamber 11 is blocked.

In the actuated state, as shown in Fig. 5B, a section 329 of the shaft 320 opposite the head section 327 protrudes from the section 302. A user may, hence, press onto the section 329 and in this way may push the actuation element 32 in a reverse direction X' opposite the venting direction X to reverse the actuation element 32 into its non-actuated position (Fig. 5A). The actuation element 32, hence, manually can be reversed by a user.

The venting device 3 may be arranged on the tube 12 or may be arranged and integrated into the drip chamber 11, as it is illustrated in Fig. 6. The venting device 3 in this case is arranged close to the outlet port 111 of the drip chamber 11 downstream of the membrane 110 such that, by venting the venting device 3, the entire residual fluid in the tube 12 can be allowed to exit from the tube 12 and can be administered to the patient P.

In the example of Fig. 6, the venting device 3 comprises a removable cover element 31, similar to the embodiment of Figs. 2A to 2C. This, however, is not limiting. Generally, also the embodiments of the venting device 3 according to Figs. 3A to 3C, 4A, 4B and 5A, 5B can be integrated into the drip chamber 11.

The idea of the invention is not limited to the embodiments described above, but can be implemented in an entirely different fashion.

The tube set may be used to administrate all kinds of different fluids to a patient, for example, a medicational liquid, a nutritional solution for the parenteral feeding of a patient, a saline solution or the like. The tube set herein may have different shapes and may be of different constitutions, comprising one or multiple tubes.

List of Reference Numerals

1	Infusion set
10	Spike
11	Drip chamber
110	Membrane
111	Outlet port
112	Inner volume
12	Tube
120	Flow channel
13	Roller clamp
14	Port
2	Container
20	Outlet port
3	Venting device
30	Air inlet member (tube section)
300, 301	Opening
302	Tube section
31	Cover element
310	Grip member
311	Filter element
32	Actuation element
320	Shaft
321, 322	Opening
323	Filter element
324, 325	Locking member
326	Spring element
327	Head section
328	Opening
329	Shaft section
A	Air flow path
F	Fluid flow path
M	Medical fluid
P	Patient
X	Venting direction
X'	Reverse direction

Claims:

1. Tube set (1) for administering a medical fluid (M) from a container (2) to a patient (P), comprising:
   - a drip chamber (11) connectable to the container (2) and comprising an inner volume (112) for receiving a fluid, an outlet port (111) allowing a fluid flow (F) out of the inner volume (112) and a membrane (110) separating the inner volume (112) from the outlet port (111), the membrane (110) being constituted to hinder an air flow from the inner volume (112) towards the outlet port (111),
   - a tube (12) connected to the outlet port (111) and forming a flow channel (120) for guiding the fluid flow (F) towards the patient (P), and
   - a venting device (3) arranged downstream of the membrane (110) and being actuatable to allow, in an actuated state, an air flow (A) into the tube (12),

   characterized in

   that the venting device (3), in the actuated state, closes the flow channel (120) of the tube (12) such that the fluid flow (F) from the drip chamber (11) through the tube (12) is blocked.

2. Tube set (1) according to claim 1, **characterized in** that the venting device (3) comprises an air inlet member (30) and an actuation element (32) arranged displaceably on the air inlet member (30) along a venting direction (X), wherein the actuation element (32), in a non-actuated state of the venting device (3), lets the fluid flow (F) pass through the flow channel (120) of the tube (12) and, in the actuated state of the venting device (3), closes the flow channel (120) such that the fluid flow (F) is blocked.

3. Tube set (1) according to claim 2, **characterized in** that the actuation element (32) comprises a shaft (320) being guided on the air inlet member (30), wherein the shaft (320), in the actuated state, reaches into the flow channel (120) for closing the flow channel (120).

4. Tube set (1) according to claim 2 or 3, **characterized in** that the actuation element (32) comprises an opening (321, 322) for allowing an air flow (A) into the flow channel (120) in the actuated state of the venting device (3).

5. Tube set (1) according to claim 4, **characterized in** that a filter element (323) for filtering the air flow (A) through the opening (321, 322) is arranged in the opening (321, 322).

6. Tube set (1) according to claim 4 or 5, **characterized in** that the opening (321, 322) is closed in the non-actuated state of the venting device (3) and is opened by displacing the actuation element (32) in the venting direction (X) with respect to the air inlet member (30).

7. Tube set (1) according to claim 6, **characterized in** that the venting direction (X) is transverse to the longitudinally extending flow channel (120) formed by the tube (12).

8. Tube set (1) according to one of claims 2 to 7, **characterized in** that the actuation element (32) is reversable for transferring the venting device (3) from the actuated state into the non-actuated state by displacing the actuation element (32) in a reverse direction (X') opposite the venting direction (X).

9. Tube set (1) according to claim 8, **characterized in** that the actuation element (32)
   - in the non-actuated state protrudes from the air inlet member (30) towards a first side and is actuatable, to transfer the venting device (3) into the actuated state, by pushing the actuation element (32) in the venting direction (X) into the air inlet member (30), and
   - in the actuated state protrudes from the air inlet member (30) towards a second side and is actuatable, to transfer the venting device (3) into the non-actuated state, by pushing the actuation element (32) in the reverse direction (X') into the air inlet member (30).

10. Tube set (1) according to claim 8 or 9, **characterized in** that the venting device (3) comprises a spring element (326) for pretensioning the actuation element (32) towards a position corresponding to the non-actuated state of the venting device (3).

11. Tube set (1) according to one of claims 2 to 7, **characterized in** that the venting device (3) comprises a locking member (324, 325) for locking the actuation element (32) in the actuated state of the venting device (3).

12. Tube set (1) for administering a medical fluid (M) from a container (2) to a patient (P), comprising:
- a drip chamber (11) connectable to the container (2) and comprising an inner volume (112) for receiving a fluid, an outlet port (111) allowing a fluid flow (F) out of the inner volume (112) and a membrane (110) separating the inner volume (112) from the outlet port (111), the membrane (110) being constituted to hinder an air flow from the inner volume (112) towards the outlet port (111),
- a tube (12) connected to the outlet port (111) and forming a flow channel (120) for guiding the fluid flow (F) towards the patient (P), and
- a venting device (3) arranged downstream of the membrane (110) and being actuatable to allow, in an actuated state, an air flow (A) into the tube (12),

characterized in

that the venting device (3) comprises an air inlet member (30) having an opening (300) formed therein for allowing an air flow (A) into the flow channel (120), the opening (300), in a non-actuated state of the venting device (3), being covered by a cover element (31) fixedly bonded to the air inlet member (30), wherein the cover element (31), for actuating the venting device (3) to allow an air flow (A) into the tube (12), is removable from air inlet member (30) to uncover the opening (300).

13. Tube set (1) according to claim 12, **characterized in** that the cover element (31), in the non-actuated state, is welded to the air inlet member (30).

14. Tube set (1) according to claim 12 or 13, **characterized in** that a filter element (311) for filtering the air flow (A) through the opening (300, 301) is arranged in the opening (300, 301).

15. Tube set (1) according to one of the preceding claims, **characterized in** that the venting device (3) is arranged on the tube (12) or is integrated in the drip chamber (11).

FIG 1

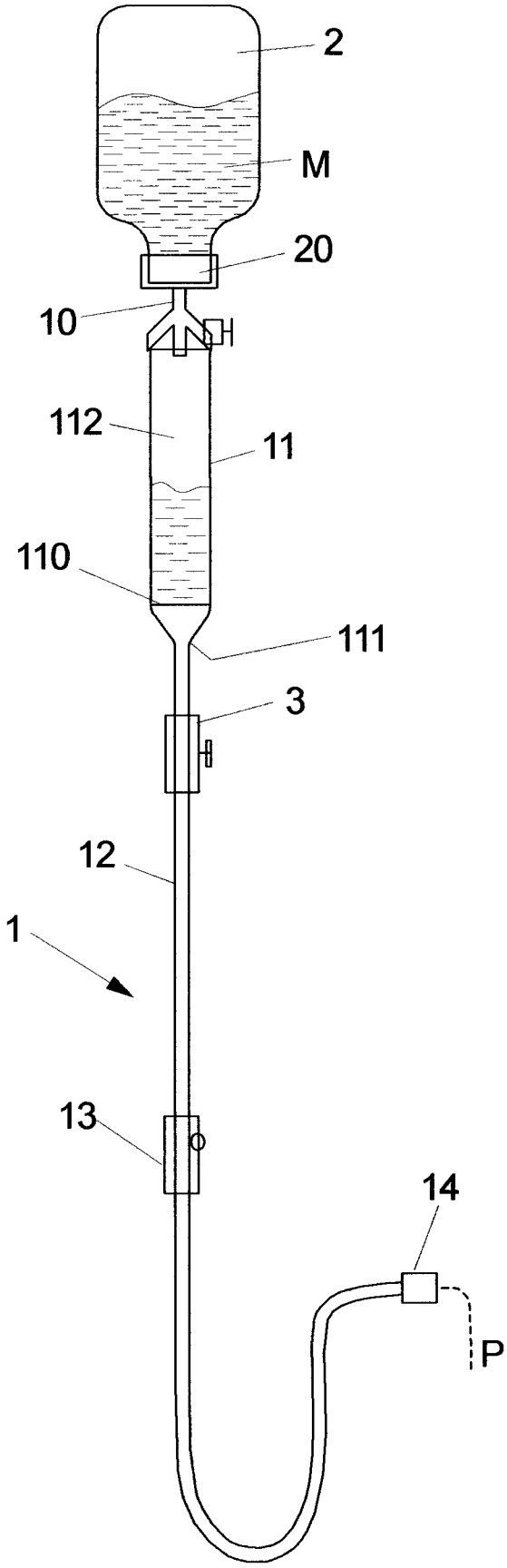

FIG 2A

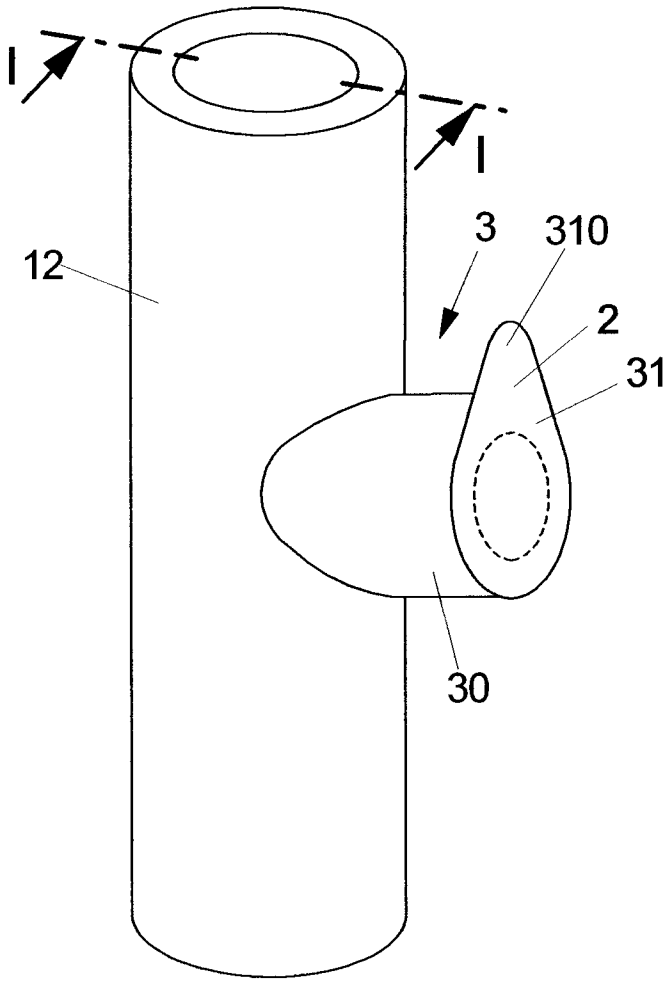

FIG 2B

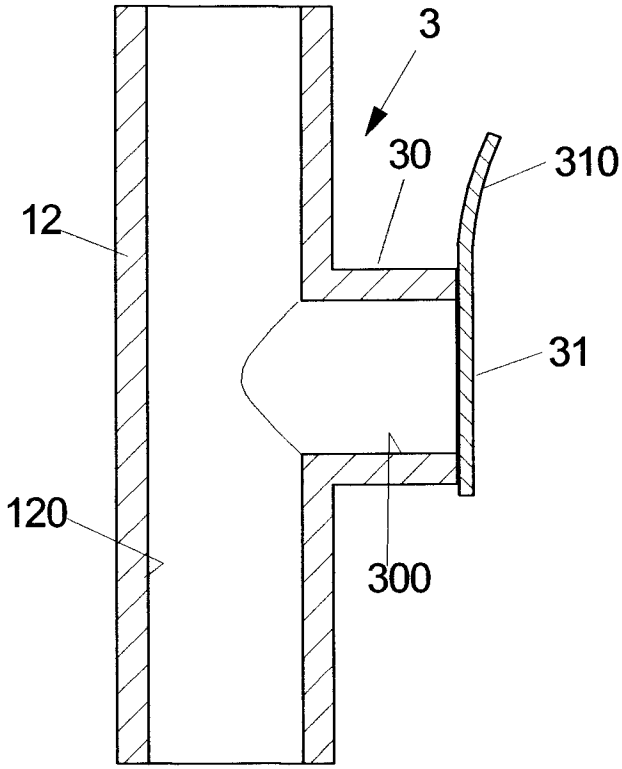

FIG 2C

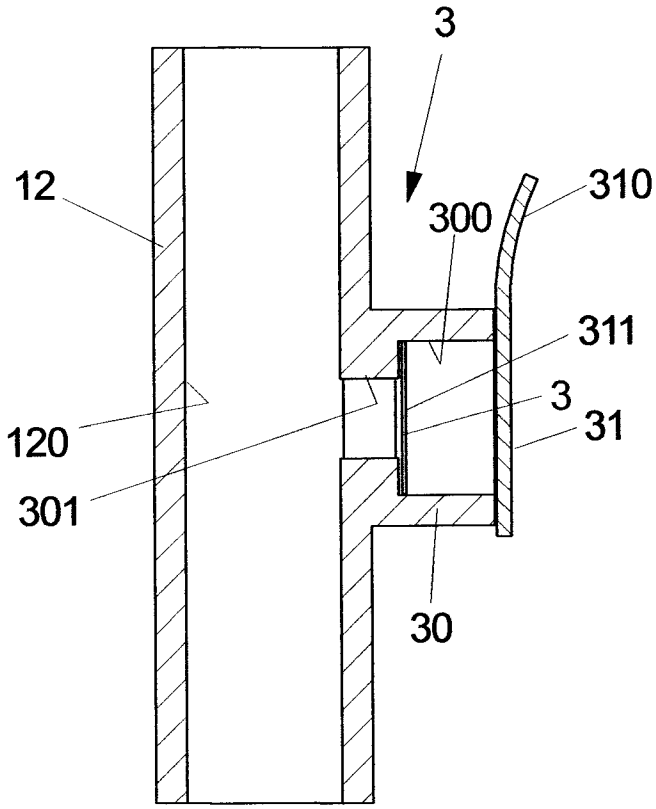

FIG 3A

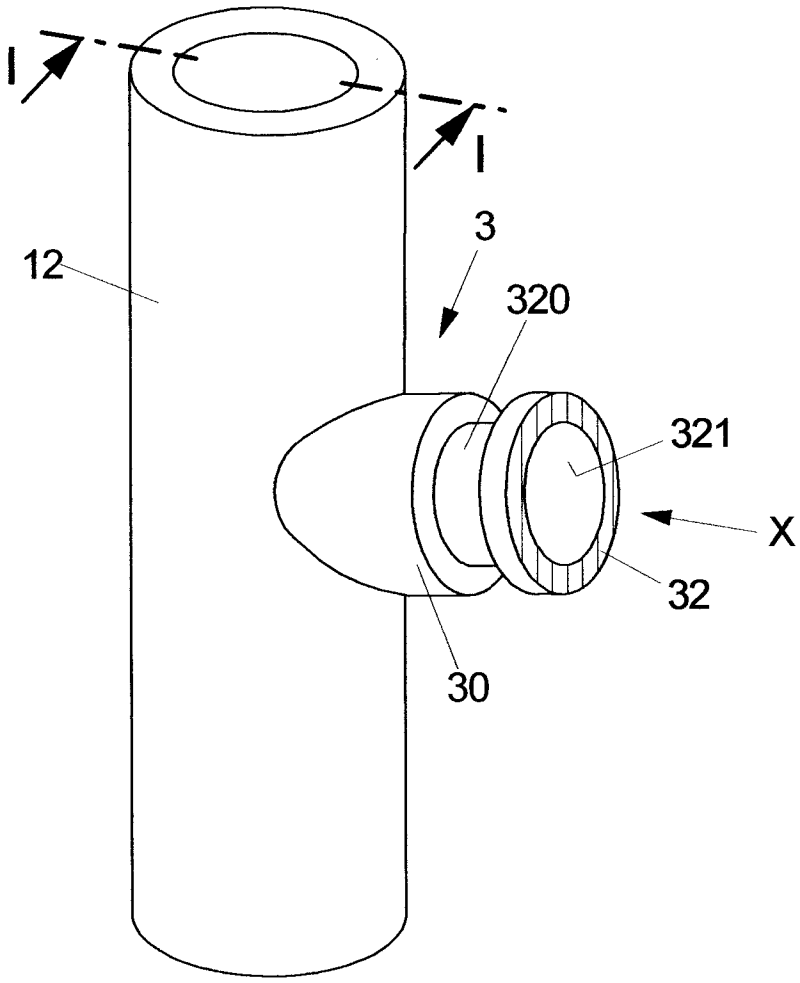

FIG 3B

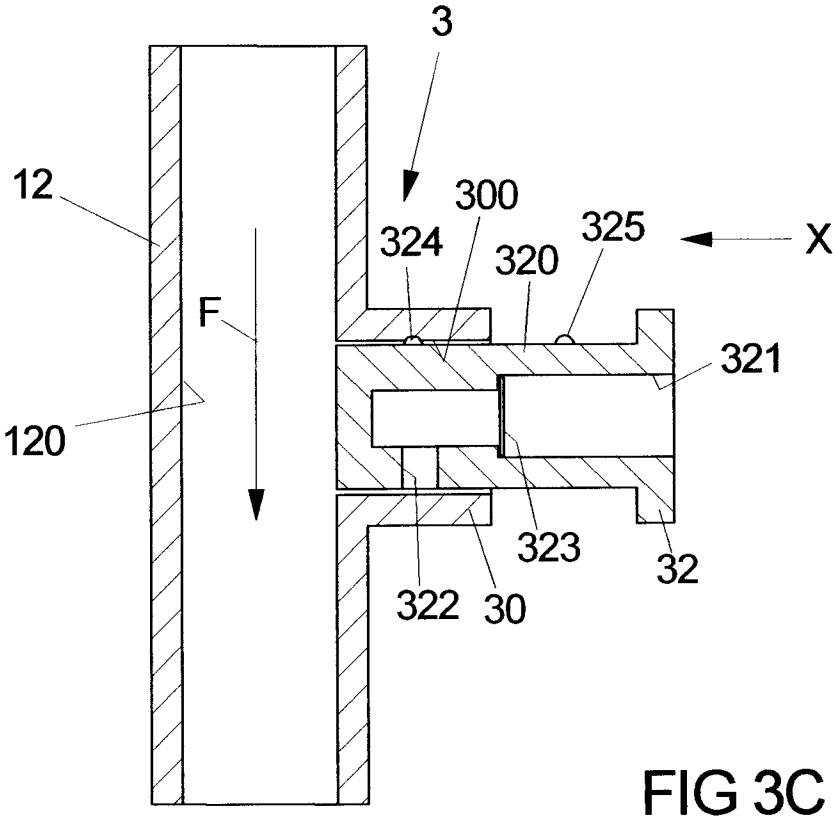
3
12
300
324
325
X
320
F
321
120
323
32
322
30

FIG 3C

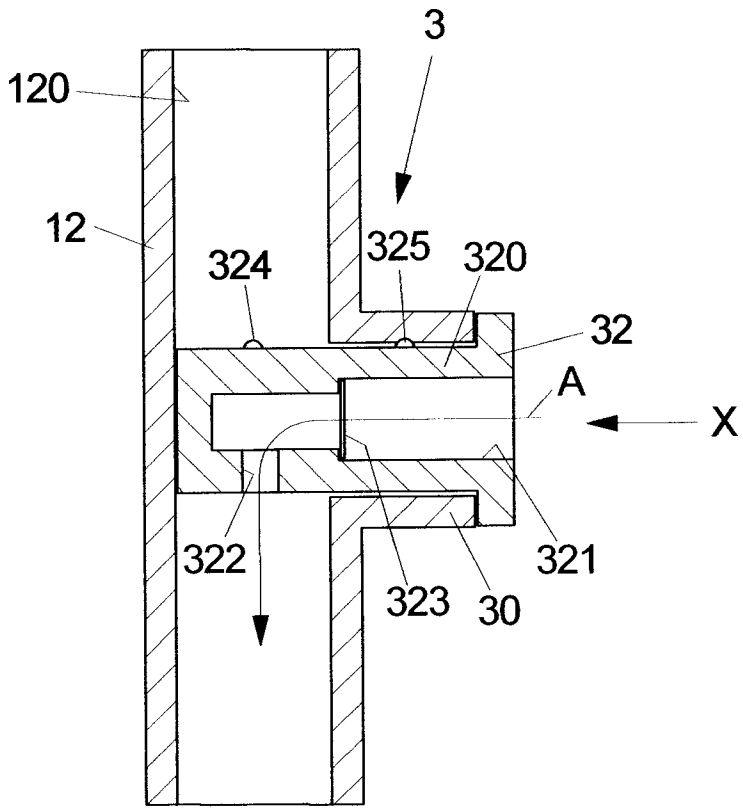
3
120
12
325
324
320
32
A
X
322
321
323
30

FIG 4A

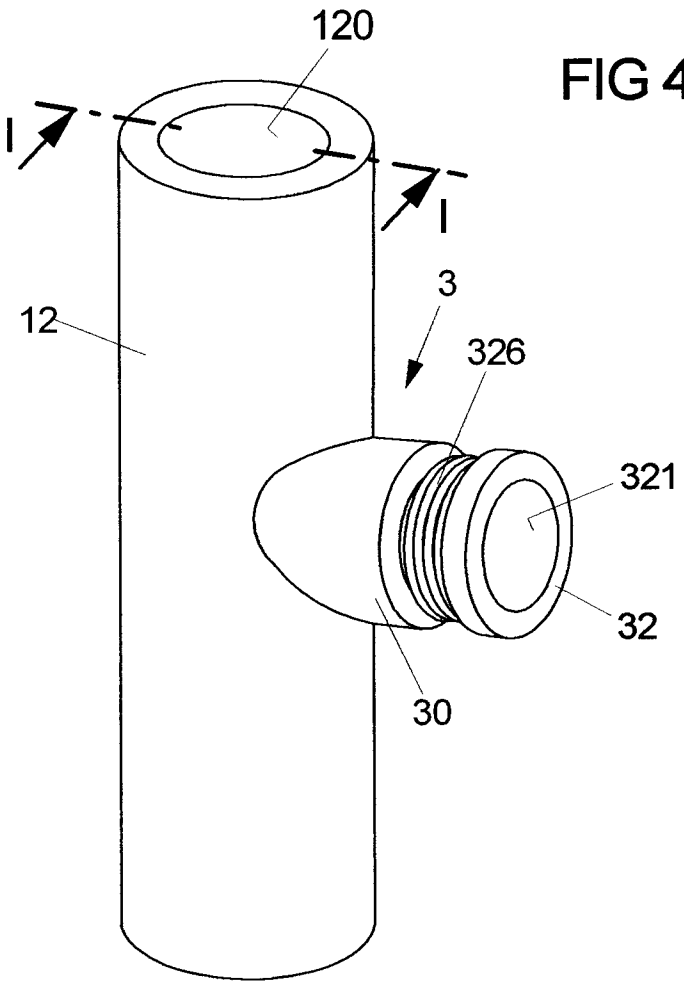
120
I
I
3
12
326
321
32
30

FIG 4B

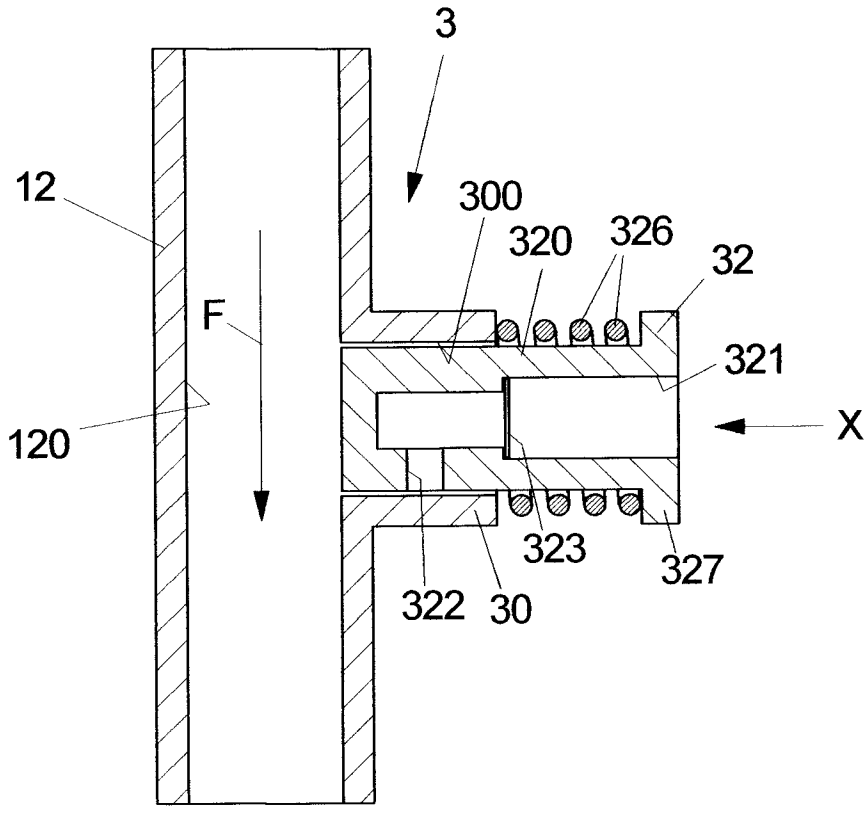
3
12
300
320
326
32
F
321
120
X
323
327
322
30

FIG 5A

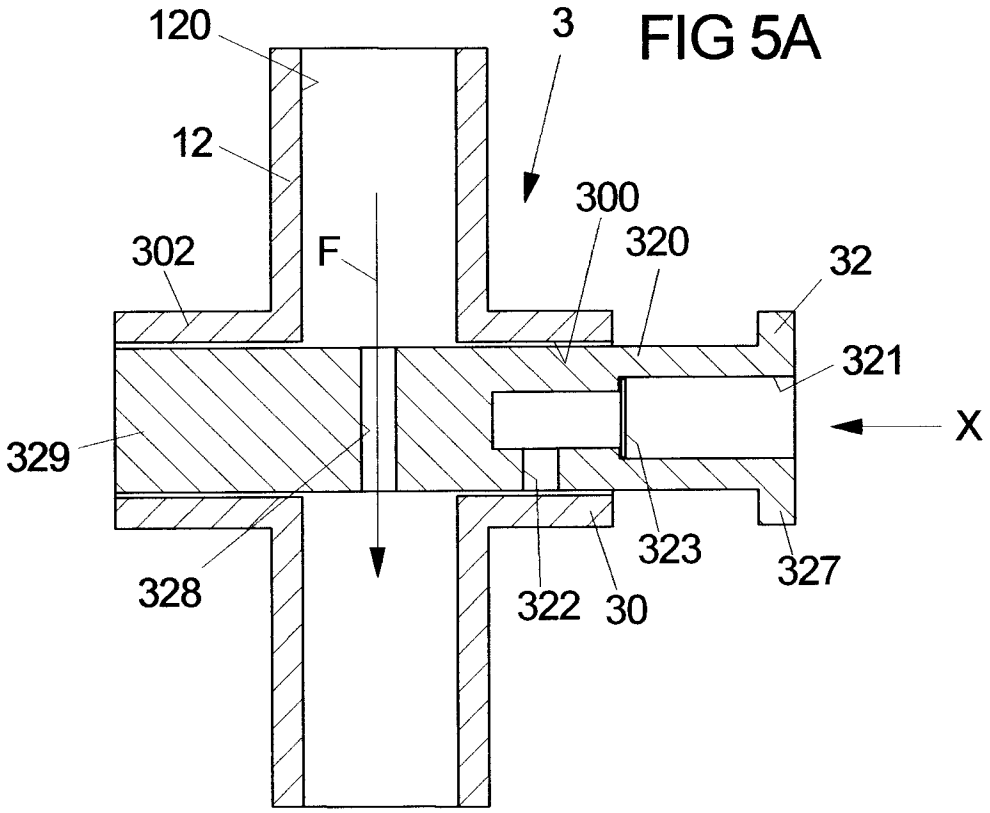
120
3
12
300
302
F
320
32
321
X
329
323
327
328
322
30

FIG 5B

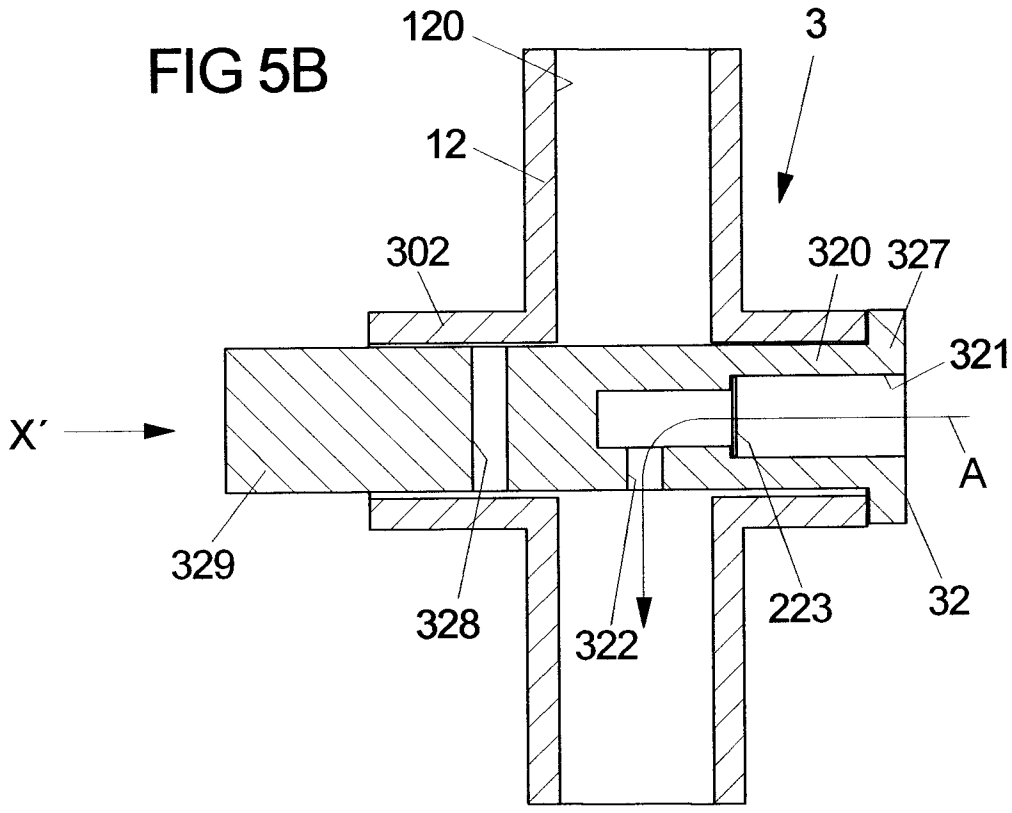
120
3
12
302
320
327
321
X'
A
329
328
322
223
32

FIG 6

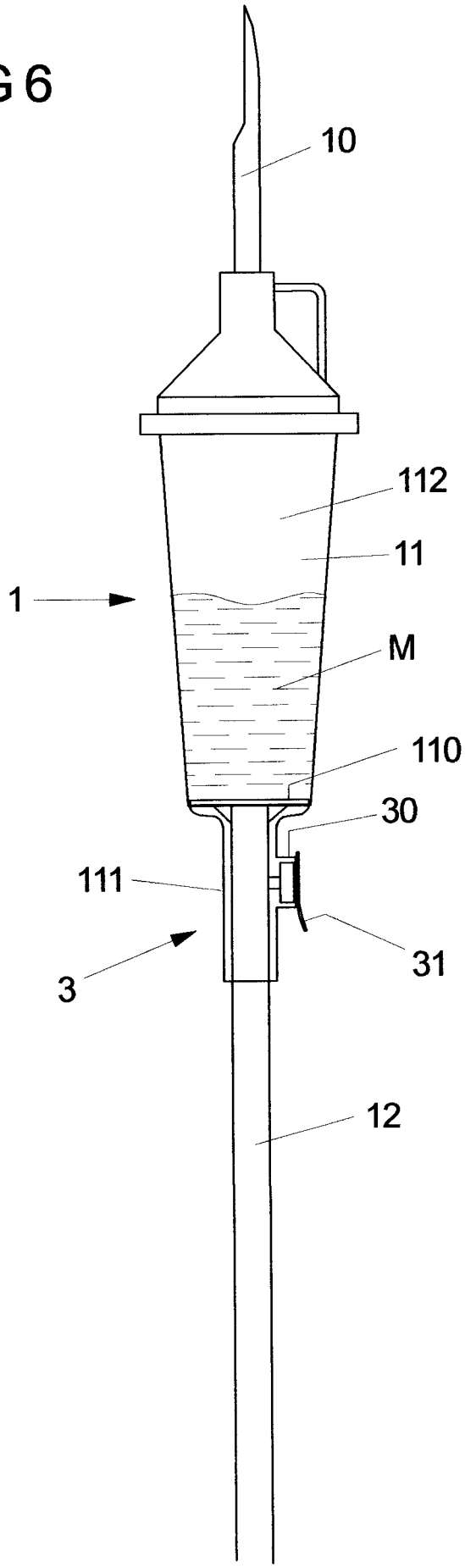

INTERNATIONAL SEARCH REPORT

International application No
PCT/EP2016/076320

A. CLASSIFICATION OF SUBJECT MATTER
INV. A61M5/14 A61M5/168
ADD. A61M39/22

According to International Patent Classification (IPC) or to both national classification and IPC

B. FIELDS SEARCHED

Minimum documentation searched (classification system followed by classification symbols)
A61M F04B F16K A61B

Documentation searched other than minimum documentation to the extent that such documents are included in the fields searched

Electronic data base consulted during the international search (name of data base and, where practicable, search terms used)
EPO-Internal, WPI Data

C. DOCUMENTS CONSIDERED TO BE RELEVANT

Category*	Citation of document, with indication, where appropriate, of the relevant passages	Relevant to claim No.
Y	US 4 198 971 A (NOILES DOUGLAS G [US]) 22 April 1980 (1980-04-22) cited in the application column 2 - column 3; figures 1, 2	1-15
Y	CN 202 091 555 U (CN ELECT TECH NO 18 RES INST) 28 December 2011 (2011-12-28) paragraph [0022] - paragraph [0026]; figures 1, 2	1-11
Y	JP S63 200771 A (NIPPON SHERWOOD KK) 19 August 1988 (1988-08-19) figures 1-3	1-11
Y	WO 2015/133502 A1 (JMS CO LTD [JP]) 11 September 2015 (2015-09-11) figures 1, 2	1

-/--

[X] Further documents are listed in the continuation of Box C.

[X] See patent family annex.

* Special categories of cited documents :

"A" document defining the general state of the art which is not considered to be of particular relevance

"E" earlier application or patent but published on or after the international filing date

"L" document which may throw doubts on priority claim(s) or which is cited to establish the publication date of another citation or other special reason (as specified)

"O" document referring to an oral disclosure, use, exhibition or other means

"P" document published prior to the international filing date but later than the priority date claimed

"T" later document published after the international filing date or priority date and not in conflict with the application but cited to understand the principle or theory underlying the invention

"X" document of particular relevance; the claimed invention cannot be considered novel or cannot be considered to involve an inventive step when the document is taken alone

"Y" document of particular relevance; the claimed invention cannot be considered to involve an inventive step when the document is combined with one or more other such documents, such combination being obvious to a person skilled in the art

"&" document member of the same patent family

Date of the actual completion of the international search	Date of mailing of the international search report
13 January 2017	23/01/2017

Name and mailing address of the ISA/	Authorized officer
European Patent Office, P.B. 5818 Patentlaan 2 NL - 2280 HV Rijswijk Tel. (+31-70) 340-2040, Fax: (+31-70) 340-3016	Preller, D

1

Form PCT/ISA/210 (second sheet) (April 2005)

INTERNATIONAL SEARCH REPORT

International application No
PCT/EP2016/076320

C(Continuation). DOCUMENTS CONSIDERED TO BE RELEVANT

Category*	Citation of document, with indication, where appropriate, of the relevant passages	Relevant to claim No.
Y	US 4 981 140 A (WYATT PHILIP [US]) 1 January 1991 (1991-01-01) column 5, line 26 - line 33; figures 1-13	12-15
Y	US 5 290 238 A (CRASS RICHARD E [US] ET AL) 1 March 1994 (1994-03-01) column 3, line 8 - line 22; figures 1,2,4	12-15
Y	EP 2 399 621 A1 (CODAN HOLDING GMBH [DE]) 28 December 2011 (2011-12-28) cf. Filter 10 & 11; paragraph [0042] - paragraph [0046]; figures 1, 2	5,14
A	WO 03/064000 A1 (BIOFIL SRL [IT]; VERRI PAOLO [IT]; MARI GIORGIO [IT]) 7 August 2003 (2003-08-07) figures 1, 2	1-15

1

INTERNATIONAL SEARCH REPORT

Information on patent family members

International application No
PCT/EP2016/076320

Patent document cited in search report	Publication date	Patent family member(s)	Publication date
US 4198971 A	22-04-1980	NONE	
CN 202091555 U	28-12-2011	NONE	
JP S63200771 A	19-08-1988	JP 2556694 B2	20-11-1996
		JP S63200771 A	19-08-1988
WO 2015133502 A1	11-09-2015	JP 2015165876 A	24-09-2015
		WO 2015133502 A1	11-09-2015
US 4981140 A	01-01-1991	NONE	
US 5290238 A	01-03-1994	AU 654796 B2	17-11-1994
		AU 3697493 A	16-12-1993
		CA 2093052 A1	11-12-1993
		EP 0574126 A1	15-12-1993
		JP H0639034 A	15-02-1994
		US 5290238 A	01-03-1994
		US 5419770 A	30-05-1995
EP 2399621 A1	28-12-2011	DK 2399621 T3	07-11-2016
		EP 2399621 A1	28-12-2011
		HR P20161303 T1	02-12-2016
		SM T201600369 B	10-11-2016
WO 03064000 A1	07-08-2003	AT 345859 T	15-12-2006
		EP 1469928 A1	27-10-2004
		ES 2272943 T3	01-05-2007
		IT TO20020080 A1	29-07-2003
		US 2005082218 A1	21-04-2005
		WO 03064000 A1	07-08-2003