D. W. HUDSON.

MACHINE FOR PERFORATING, SLITTING, AND REWINDING PAPER.

APPLICATION FILED MAY 8, 1916.

1,328,431.

Patented Jan. 20, 1920.

4 SHEETS—SHEET 1.

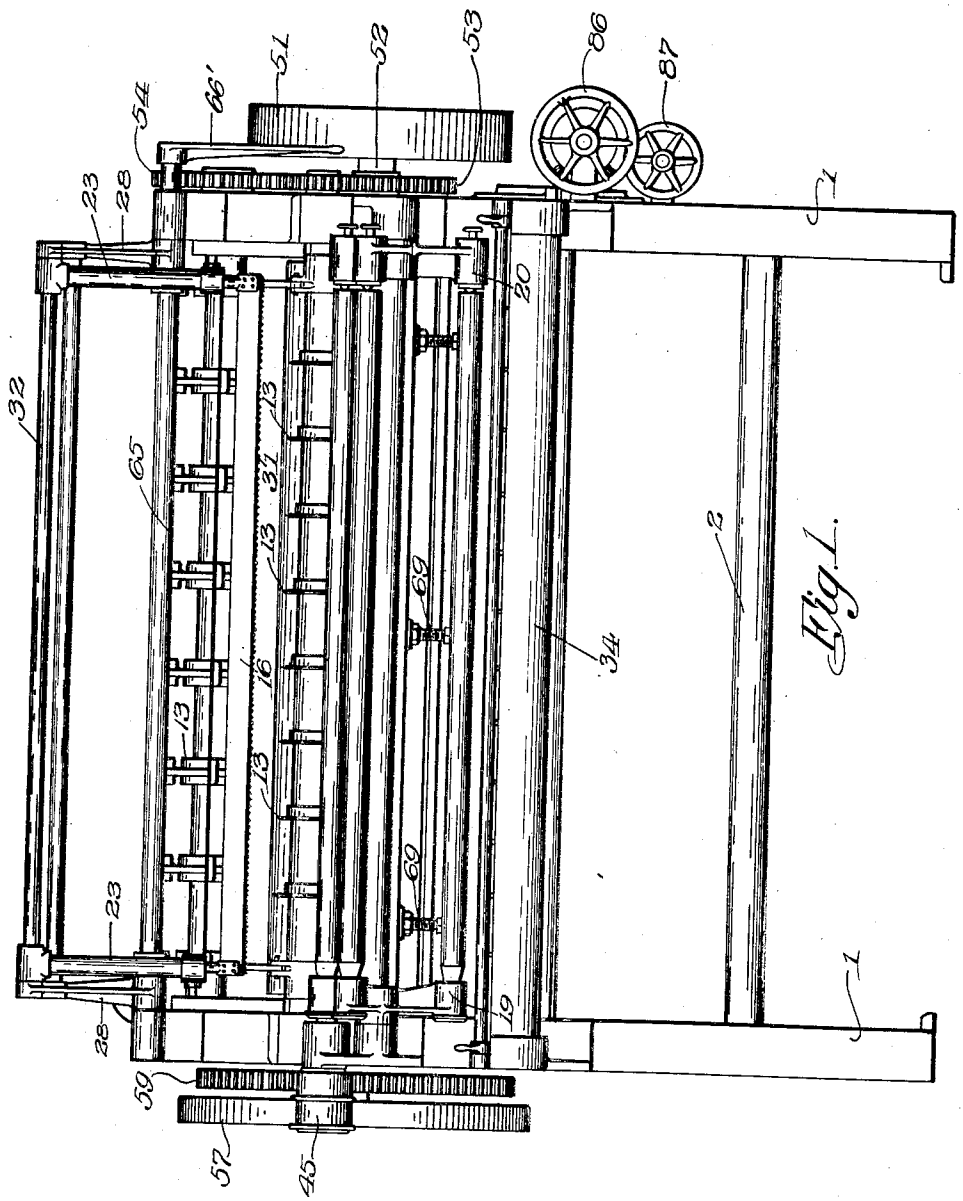

Fig. 1.

D. W. HUDSON INVENTOR.

BY C. F. Bond

his ATTORNEY.

D. W. HUDSON.

MACHINE FOR PERFORATING, SLITTING, AND REWINDING PAPER.

APPLICATION FILED MAY 8, 1916.

1,328,431.

Patented Jan. 20, 1920.

4 SHEETS—SHEET 2.

Fig. 2.

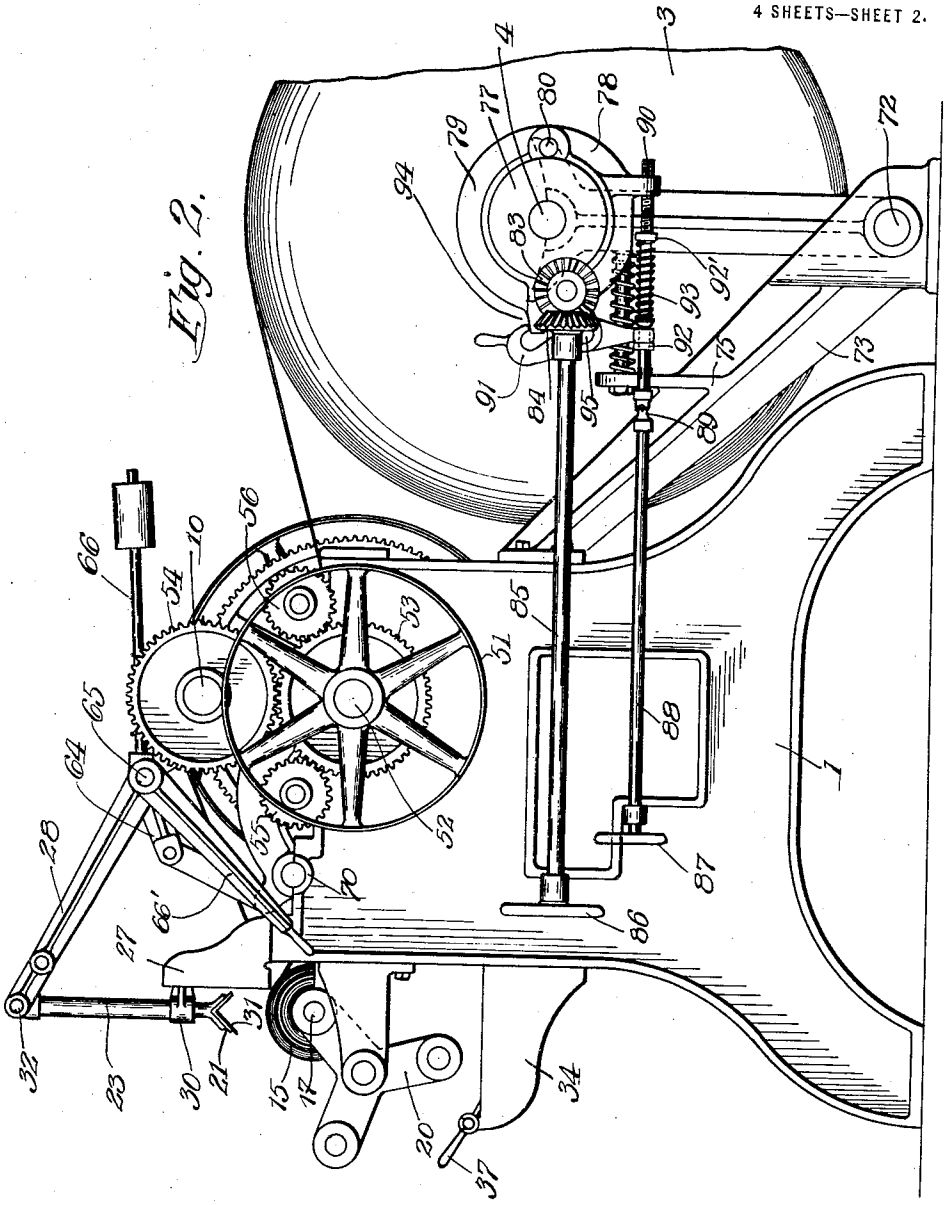

D. W. HUDSON INVENTOR.

BY E. F. Bond

his ATTORNEY.

D. W. HUDSON.

MACHINE FOR PERFORATING, SLITTING, AND REWINDING PAPER.

APPLICATION FILED MAY 8, 1916.

1,328,431.

Patented Jan. 20, 1920.

4 SHEETS—SHEET 3.

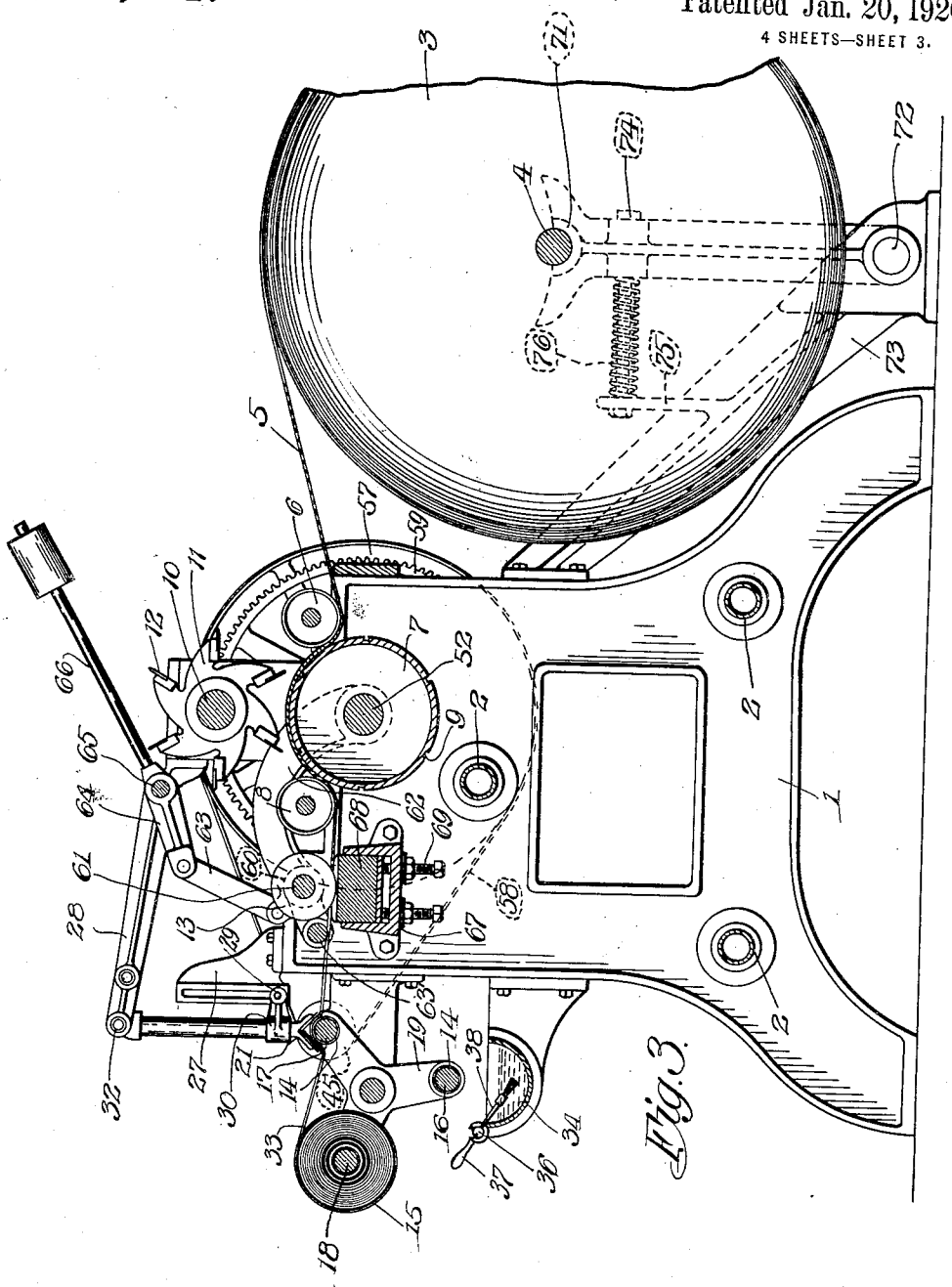

Fig. 3.

D. W. HUDSON INVENTOR.

BY E. F. Bond

his ATTORNEY.

D. W. HUDSON.

MACHINE FOR PERFORATING, SLITTING, AND REWINDING PAPER.

APPLICATION FILED MAY 8, 1916.

1,328,431.

Patented Jan. 20, 1920.

4 SHEETS—SHEET 4.

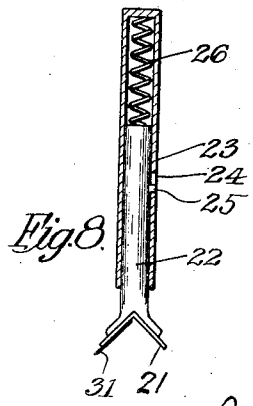

Fig. 8.

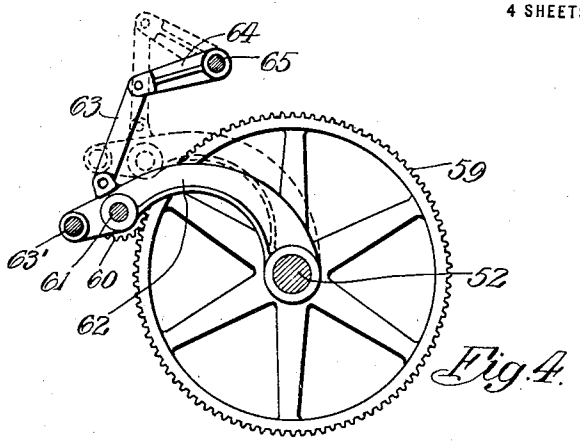

Fig. 4.

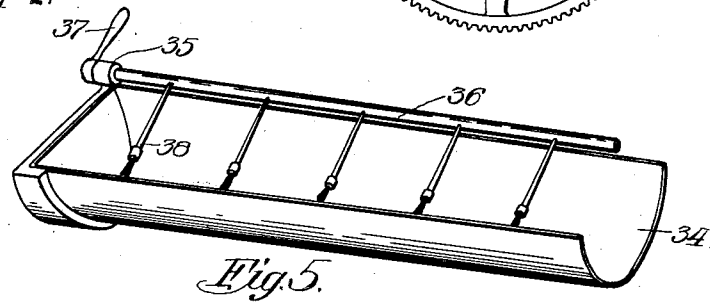

Fig. 5.

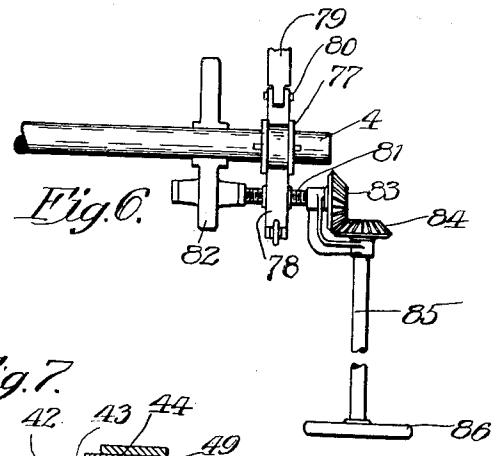

Fig. 6.

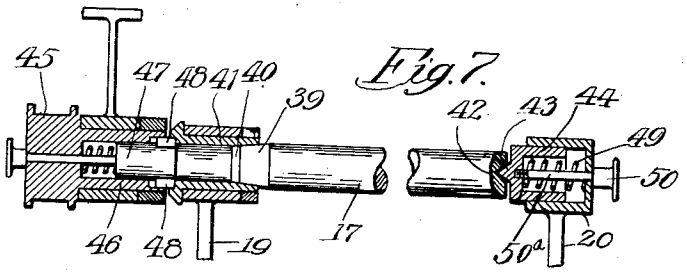

Fig. 7.

D. W. HUDSON INVENTOR.

BY E. F. Bond

his ATTORNEY.

UNITED STATES PATENT OFFICE.

DAVID W. HUDSON, OF GREEN BAY, WISCONSIN, ASSIGNOR TO HUDSON-SHARP MACHINE COMPANY, OF GREEN BAY, WISCONSIN, A CORPORATION OF WISCONSIN.

MACHINE FOR PERFORATING, SLITTING, AND REWINDING PAPER.

1,328,431. Specification of Letters Patent. Patented Jan. 20, 1920.

Application filed May 8, 1916. Serial No. 96,219.

To all whom it may concern:

Be it known that I, DAVID W. HUDSON, a citizen of the United States of America, residing at Green Bay, in the county of Brown and State of Wisconsin, have invented certain new and useful Improvements in Machines for Perforating, Slitting, and Rewinding Paper, of which the following is a specification, reference being had therein to the accompanying drawing.

The invention relates to improvements in machines for unwinding paper from a large, wide roll, and slitting, perforating and rewinding the same on a plurality of smaller, narrower rolls.

It is an object of the invention to provide means for holding the paper to a pasted core while the sheet is being severed between said pasted core and the rewound roll, so as to prevent tearing of the paper sheet back of said pasted core.

A further object of the invention is the provision of means for raising the slitting cutters so that a sheet of paper from a new roll may be easily fed through the machine.

A further object consists in providing conveniently arranged means for providing the paper cores with a band of paste.

Still a further object aims at the provision of means for yieldingly supporting a large supply roll.

To the accomplishment of these and other objects that will appear as the description proceeds the preferred embodiment of the invention consists in the novel construction and arrangement of parts described in the specification and specifically pointed out in the appended claims.

In the accompanying drawings—

Figure 1 is a front view of the machine made in accordance with the invention.

Fig. 2 is an end view of the machine.

Fig. 3 is a transverse section through the machine through its center.

Fig. 4 illustrates in detail the means for raising the slitting cutters.

Fig. 5 is a perspective fragmentary view of the glue trough and brushes employed to provide the paper cores with paste.

Fig. 6 illustrates in detail means for laterally adjusting the large supply roll.

Fig. 7 indicates in section the locking and driving means for the rewinding shafts, and

Fig. 8 is a detail view of one of the arms which press the sheet of paper to a core prior to its being severed and rewound.

In all of the figures like reference numerals indicate corresponding parts of the machine. In the drawings, 1 designates suitable side frames held in spaced relation to each other by a plurality of spacing rods 2 secured with their ends to said frames in any appropriate or suitable manner. The paper is supplied from a large, wide roll 3 mounted upon a shaft 4. The paper 5 is unwound from the roll and is conducted past a plurality of rolls 6, 7, 8, such that the paper passes under the rolls 6 and 8 and over the roll 7, as indicated in Fig. 3. The roller 7 is equipped on its surface with a plurality of recesses or longitudinal grooves 9 spaced equidistantly for a purpose presently described. Directly above the roller 7 a shaft 10 is provided extending parallel to said roller and carrying at suitable intervals frames 11 adapted to receive and maintain in proper relation to each other and to the roller 7 a plurality of perforating knives 12, which, rotated in timed relation to said roller, enter the longitudinal grooves thereof and simultaneously provide an intervening sheet of paper with a series of perforations. In its further movement the paper passes a plurality of slitting knives 13 which cut the web of paper into narrow bands for the purpose of rewinding said bands on suitable cardboard cores 14 to obtain smaller, narrower rolls 15. It is apparent that as soon as the rolls attain a certain predetermined diameter the machine is stopped and the series of rolls 15 is removed, as hereinafter more specifically pointed out. The cardboard cores 14 are provided on shafts 16, 17, 18 journaled in triangular frames 19 and 20.

An angle bar 21 is fastened at each end to arms 22 slidingly fitted in the hollow shaft 23 (Fig. 8) receiving in a slot 24 a pin 25 of said arms 22, whereby the vertical movements of said arms are limited. A spring 26 inserted between the end wall of the hollow shaft 23 and the arm 22 serves to cushion the latter. The hollow shafts 23 at each side of the machine are secured to a rod 32 connecting the ends of arms 28 loosely mounted to a shaft 65. The side frames 1 are provided at their forward

end with brackets 27 having vertical slots adapted to receive a pin 29 carried by the part 30 for the purpose of guiding the movements of the angle bar 21. To the latter a saw-toothed blade 31 (Fig. 8) is secured which engages the paper when the same is being severed after the rewound narrow roll 15 assumes a predetermined diameter.

If a series of rolls 15 are to be removed the frames 19 and 20 are turned in the position shown in Fig. 3, whereupon the new cores 14, which previously have been provided with a band of paste, are brought into proper position ready for receiving the next roll of paper. It is understood, however, that the frames 19 and 20 are not turned sufficiently to bring the cores 14 into engagement with the paper, but that this engagement only takes place after the angle bar 21 is pressed downwardly, thus forcing the paper into engagement with the paper core 14. The angle bar 21 may be readily raised or lowered by reason of the hollow shafts 23 pivotally secured to the rod 32 which extends the entire width of the machine and may be oscillated about the shaft 65 by the connecting loosely fitted arms 28, thus permitting the ready adjustment of the angle bar as is necessary for engaging and disengaging the sheet of paper. A weighted lever 66 carried by one of the arms 28 is for the purpose of normally holding the said arms 28 carrying the hollow shafts 23 and angle bar 21 in the upper position as shown in Fig. 2. When depressing the angle bar 21 the sheet of paper is forced into engagement with the pasted core 14 and the teeth of the blade 31 enter the web between the pasted core and the rewound roll for the purpose of preventing sliding of the paper when the operator passes his hand through the web at 33, so as to sever the rewound roll from the main sheet of paper.

Before the cores 14 are brought into proper position it is necessary to apply to them paste, and for this purpose the trough 34 is provided directly beneath the frames 19 and 20 containing the necessary glue. As is obvious from Fig. 3 and more particularly from Fig. 5, the end walls of said trough are provided with eyed ears 35 in which the rod 36 is journaled having at its end levers 37 and being provided with a plurality of brushes 38 normally extending into said trough. When it is desired to apply paste to a series of cores 14 of any of the shafts 16, 17, or 18, the operator simply presses down the lever 37 when one of the shafts is directly above said trough, whereupon the brushes apply to said cores a band of paste by turning the shaft with the hand.

The core shafts 16, 17, and 18 are round throughout their length, but are formed at one end with a square portion 39 fitting into a correspondingly formed socket 40 of a sleeve 41 (Fig. 7). This sleeve is carried by each of the frames 19. The opposite ends of said core shafts are each provided at its center with a conical recess 42 adapted to receive a similarly shaped centering part 43 formed on the sleeve 44 slidingly fitted in the hollow hub of the frame 20. A drive pulley 45 is formed integral with the sleeve 46 adapted to receive a sliding plug 47, whose outer end is formed with a plurality of keys 48 projecting beyond said sleeve 46 and adapted to engage grooves in the sleeve 41, whereby the same, and with it the core shaft, is rotated and the several strips of paper are wound on their respective cores until rolls of a desired diameter have been formed. From the foregoing it is obvious that only one shaft at a time is in driving connection with the pulley 45, while the other shafts are idle, whereby the operator is permitted to remove the rewound rolls from the shaft without necessitating an interruption in the continuous operation of the machine. The sleeve 44 is controlled by a spring 49 interposed between the hub 20 and the end wall of said sleeve, and a button 50 is secured with its elongated shaft 50^a to the sleeve 44, so that the rewound rolls may be removed by withdrawing laterally the button 50, whereupon the shaft and the rewound rolls may be detached.

The machine is actuated by means of a pulley 51 driven from any suitable source of power. The pulley is mounted upon a shaft 52, also carrying a gear 53 meshing with a gear 54 of the shaft 10, whereby the latter is driven. The gear 53 meshes also with gears 55, 56 which drive the rollers 8 and 6, respectively. A pulley 57 is mounted at the other end of the main drive shaft 52 and a belt 58 is trained around the pulleys 57 and 45 to drive the core shaft coupled to the pulley 45. Adjacent the pulley 57 a gear wheel 59 is mounted on the main drive shaft 52 meshing with the pinion 60 mounted upon the end of the slitter shaft 61. This shaft is carried by arms 62 mounted upon the shaft 52. A small roller 63′ extending the full width of the web in front of the slitting knives 13 is also carried by these arms 62. Links 63 connect each of these arms 62 with arms 64 keyed to a shaft 65. A lever 66′ is keyed to the shaft 65 to facilitate manipulation of the slitting knives. As indicated in Fig. 4, in the raised position of the lever 66′, the slitting knives are raised as shown in dotted lines, so that the operator can easily start a sheet from a new roll 3 through the machine.

A channel 67 is secured to the side frames 1 and carries a block 68, preferably of wood, which, resting on screws 69, may be adjusted by the same. The web of paper passes over this block 68 as it is being slit into nar-

row ribs or bands by the slitting knives 13, to which end the block 68 is provided with transverse grooves or recesses, into which each of said slitting knives extends. When the slitter shaft 61 is in its lower position it is supported by the half bearings 70 (Fig. 2), carried by the side frames 1.

The roll of paper 3, wound upon the shaft 4, is supported at the rear of the machine in bearings 71, mounted at their lower ends upon a shaft 72, which is journaled in arms 73 extending from the side frames 1. Near the upper end of each bearing a bolt 74 connects the bearing with a projection 75 extending vertically from the arm 73, as indicated in Fig. 3. A coiled spring 76 surrounds the bolts, whereby the roll of paper 3 will yield inwardly to avoid sudden strains upon the sheet of paper. The roll shaft 4 is provided with a collar 77 (Fig. 6) which supports a yoke 78, the upper portion 79 of which is pivotally secured to its lower portion by means of a pin 80. A screw shaft 81, journaled in a bearing 82, passes through the lower portion of the yoke 78 and carries at its end a beveled gear 83 meshing with a similar gear 84 of a rod 85 provided at its outer end with a hand wheel 86, so as to provide means for revolving the screw 81 to shift the roll shaft 4 laterally when this becomes necessary upon drawing the web of a new roll of paper 4 through the machine. A hand wheel 87 (Fig. 2) is provided at the end of a rod 88 whose other end terminates in a universal coupling 89 to which a screw shaft 90 is connected. The connections serve for the purpose of adjusting the tension to the roll. As will be seen by reference to Fig. 2, a hook member 91 is mounted upon the shaft 90 and is held in engagement with a collar 92 of said shaft by means of a coiled spring 93 surrounding the shaft 90 and engaging with the other end of a second collar 92′. The hook member 91 bears with its upper part upon the hinged part 94, which upon disengagement of said hook member may be swung back so as to permit withdrawal of the shaft 4. The hook member 91 is pivoted intermediate its ends on a pin 95 and by adjusting the lower part of said hook member the desired brake pressure may be applied to the collar 77.

While in the drawings a preferred embodiment of the invention is illustrated it is understood that I do not intend to confine myself to the exact details as shown, but want to avail myself of any change or alterations that fairly fall within the scope of the appended claims.

I claim:—

1. In a machine of the character described, a support for a roll of paper, means for supporting and rotating a series of rewinding cores whereon the paper is rewound on smaller rolls, means for placing a second series of cores in proper position, an angle plate extending the full width of the paper, arms on said angle plate, sleeves surrounding said arms, means for limiting the movement of said arms in said sleeves, a spring interposed between said arms and said sleeves, and means for raising and lowering said sleeves, substantially as described.

2. In a machine of the character described, a support for a roll of paper, slitting knives for cutting the paper into a plurality of bands, means for supporting and rotating a series of rewinding cores whereon the paper bands are rewound to smaller rolls, and means for placing said slitting knives into inoperative position preparatory to starting a new sheet of paper through the machine.

3. In a machine of the character described, a support for a roll of paper, slitting knives for cutting the paper into a plurality of bands, means for supporting and rotating a series of rewinding cores whereon the paper bands are rewound to smaller rolls, means for placing a second series of cores in proper position, means for placing the paper into engagement with said last named cores upon severing the rewound rolls from the sheet of paper, and means for placing said slitting knives into inoperative position preparatory to starting a new sheet of paper through the machine.

4. In a machine of the character described, a support for a roll of paper, means for supporting and rotating a series of rewinding cores whereon the paper is rewound to smaller rolls, means for placing a second series of cores in proper position, an angle plate adapted to bring the paper into engagement with said last named cores preparatory to severing the rewound rolls from the paper, and means provided on said angle plate for predetermining the line of severance.

5. In a machine of the character described, a support for a roll of paper, means for supporting and rotating a series of rewinding cores whereon the paper is rewound to smaller rolls, means for placing a second series of cores in proper position, an angle plate adapted to bring the paper into engagement with said last named cores upon severing the rewound rolls from the paper, and a saw-toothed blade adapted to enter the web of paper whereby the line of severance is predetermined.

In testimony whereof I hereunto affix my signature.

DAVID W. HUDSON.