May 23, 1933. L. LEBAU 1,910,701

ELECTRIC RADIANT HEATER

Filed Jan. 25, 1932

Fig. 3.

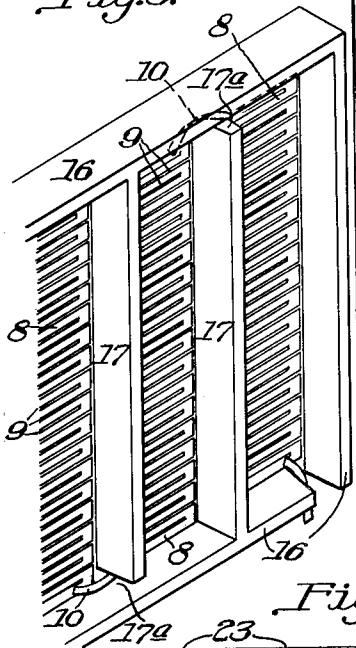

Fig. 1.

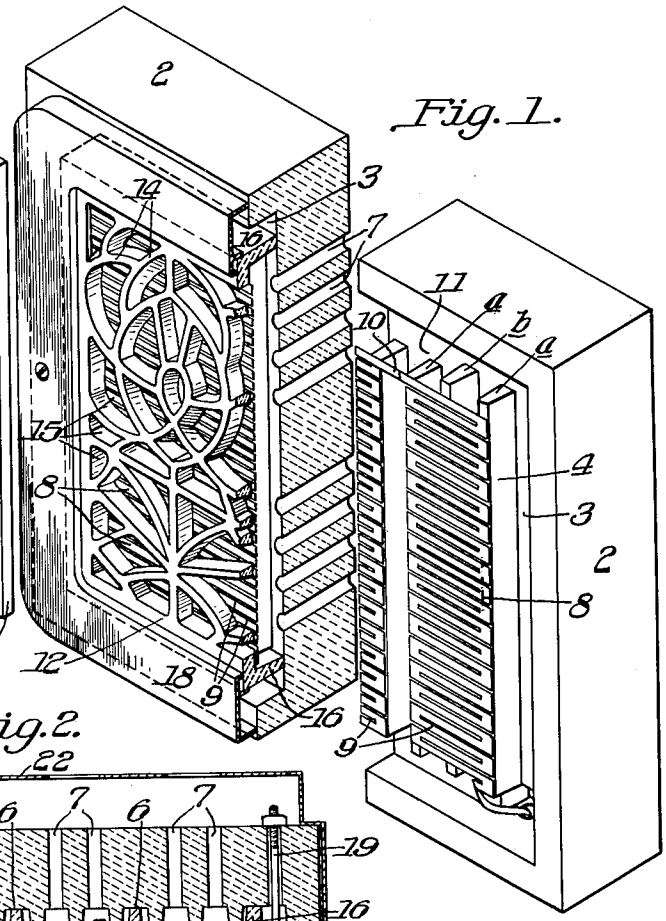

Fig. 2.

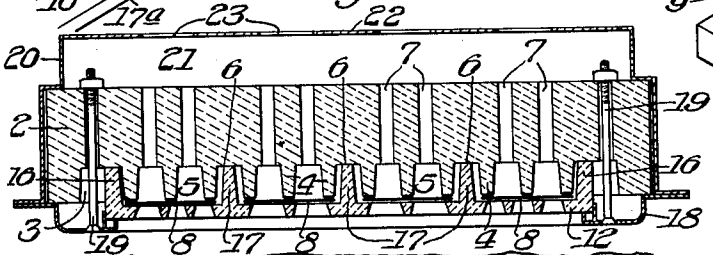

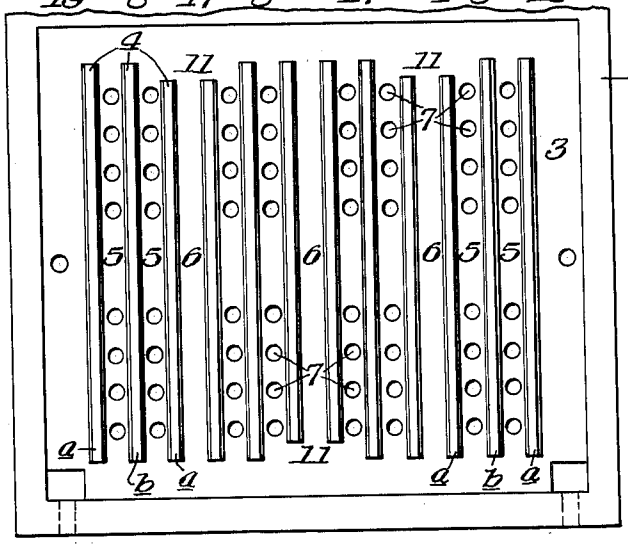

Fig. 4.

INVENTOR.
Louis Lebau
BY Clarke & Doolittle
ATTORNEYS.

Patented May 23, 1933 1,910,701

UNITED STATES PATENT OFFICE

LOUIS LEBAU, OF PITTSBURGH, PENNSYLVANIA

ELECTRIC RADIANT HEATER

Application filed January 25, 1932. Serial No. 588,518.

This invention relates to improvements in electric heaters, and more particularly to electric radiant heaters of the character shown in my pending application Serial Number 435,463, filed March 13, 1930.

The present invention resides principally in a new and improved back wall or heat-reflector block or plate for use in such a heater, in combination with a flat electrical resistor element and an open-work radiant member, whereby a circulation of air is provided to increase the efficiency of said heater.

The invention contemplates a construction embodying a heat-reflector plate or block formed of suitable material and having spaced-apart receiving means for the flat resistor element to form air passages therebehind, said passages being in open communication with the rear of the reflector plate by means of a series of ducts or openings. This construction will provide a continuous forward circulation of air through the heater.

Additional features and advantages of my invention will become apparent from the following description taken in connection with the accompanying drawing, wherein:

Fig. 1 is a front broken perspective view of a heater embodying my invention, having portions thereof removed to disclose details;

Fig. 2, a central horizontal section;

Fig. 3, a rear perspective view, particularly showing the radiant member and the resistor element therein; and

Fig. 4, a front elevational view of the heat-reflector plate or block.

Referring to the drawing, 2 designates a back wall or heat-reflector plate or block made of suitable material that may be utilized both for insulating and heat reflecting purposes. I prefer to use a plate or block formed of fire-clay, having incorporated therein saw-dust or the like which, upon firing, results in a more or less porous body.

Such a back wall or plate, when made of substantial thickness, will sufficiently insulate the heater against any dangerous and undesirable transfer of heat from the resistor element to the rear of the heater, thus preventing fire and loss of heat.

By experiments and tests, I have discovered that when a surface of a plate or block of the character specified is subjected to extreme heat, such as is generated by the resistor element employed by me, it will attain a high temperature and glow with a red color. The heat thus applied penetrates the material of the plate but a slight distance, being prevented from passing through the plate by its inherent insulating properties. The hot surface area of the plate acts as a reflector to reflect and radiate additional heat outwardly therefrom, thereby providing a highly efficient back wall construction.

As illustrated, the reflector plate 2 comprises a body of rectangular shape having the front or heat-reflecting face thereof formed with a rectangular depression or recess 3. Positioned in the depression or recess, I provide a plurality of spaced-apart parallel vertically extending ribs or projecting elements 4, preferably formed integral with the body. Elements 4, as shown and as preferred, are narrow in width and are arranged in groups of three, each group consisting of outer ribs *a* and a central rib *b*, and are spaced to produce vertically extending air passages 5. The groups are also spaced apart to provide intervening vertical spaces or grooves 6 for a purpose hereinafter described. A series of air ducts or openings 7 are also provided, and extend rearwardly through the plate 2 from the communicating air passages 5.

In connection with such a back wall or reflector plate, I prefer to employ a flat resistor element formed of thin metal strips 8 having narrow spaced apart slots 9 cut therein alternately from the edges of said strips to provide a sinuous path for the current. The said strips 8 are of substantially the same width as the distance between the outer ribs *a* of each group hereinbefore described, and are positioned thereon.

When the resistor strips 8 are thus positioned on the ribs 4, one strip for each group of three ribs, adjacent strips are electrically connected by portions 10, either at the upper or lower portions of the ribs. For this purpose, the end portions of the outer ribs *a* of adjacent groups are cut away, as at 11, to accommodate the connecting portions 10. The cen-

tral ribs *b* of each group serve to support the thin flat resistor elements and prevent buckling or distortion.

Superimposed upon the block or reflector plate 2 is an openwork radiant member 12; this radiant member is formed of refractory clay or the like and includes irregular connecting face portions 14 separated by openings 15 worked into an attractive design. The radiant member substantially conforms in shape and size to the depression 3 of the plate 2, and has a rearwardly extending marginal flange 16 for entrance in the outer portion of said depression.

Radiant member 12 is provided with spaced-apart vertically extending ribs 17 adapted to be positioned in the spaces or grooves 6 between adjacent groups of reflector plate ribs 4, as particularly shown by Fig. 2. Said ribs 17 are cut away at their end portions, as at 17*a*, to span the connecting portions 10 of the resistor strips.

The inner face of the radiant member 12 contacts with the resistor elements or strips 8 to maintain the same flat against their supporting ribs 4. The ribs 17 and vertical portion of the marginal flange 16 cooperate with grooves 6 and the depression 3 to prevent lateral movement or disengagement of the resistor strips 8.

Suitable means may be employed for securing the radiant member 12 to the block or plate 2. For example, I show an open frame member 18 secured to said plate by means of bolts or screws 19.

In operation, the terminals of the resistor element are connected with a source of electrical energy in any suitable manner. When an electrical current is applied, the element becomes heated and imparts heat to the surrounding medium and the back wall or reflector plate 2, as described.

Due to the open slots 9 in the resistor strips 8, the air passages 5 and rearwardly extending ducts or openings 7 in the reflector plate, a circulation of air is induced by the heat of the element through said ducts and passages to the element, where it is heated and passes out of the heater through the openings 15 of the radiant 12.

Any suitable casing or housing may be employed for the heater, as, for example, a metal box 20 having an air space 21 in the rear thereof. The back 22 of the casing is preferably formed with a series of openings 23 for supplying air to the ducts or openings 7 in the reflector plate.

It will be readily seen that, by means of my construction, the transfer of heat to the surrounding medium by convection is greatly increased, due to the air currents induced by the hot resistor element through the reflector plate. Also, the hot resistor and reflector plate will radiate heat very efficiently.

I have found that by means of my heater, a great saving in the cost of operation is effected by the construction shown, due to the fact that the full current need only be turned on while the reflector plate is heating, and when it attains its glowing red color, the current may be reduced and the heating continued effectively at a moderate cost.

I claim:

1. An electric radiant heater including a back reflector plate having an air passage formed on a face thereof and a communicating opening extending through the plate, a flat slotted electric resistor element positioned on the plate over the air passage, and an open-work refractory radiant member superimposed on the plate in contact with and over the resistor element.

2. An electric radiant heater including a back reflector plate having air passages therein and a series of air openings extending therethrough in communication with the air passages, a flat slotted electric resistor element extending over said air passages, and an open-work refractory radiant member superimposed on the plate and over the resistor element.

3. An electric radiant heater including a back reflector plate of insulating material provided with a plurality of ribs spaced apart to provide air passages therebetween, and a series of air openings extending therethrough in communication with the air passages, a flat slotted electric resistor element disposed on the ribs over the said air passages, and an open-work refractory radiant member superimposed on the plate and engaging said resistor element.

4. An electric radiant heater including a back reflector plate of insulating material formed with a pair of ribs spaced apart to provide an air passage therebetween, said plate having an air duct therethrough in communication with the air passage, a flat slotted electric resistor element extending between said ribs and over said air passage, and an open-work refractory radiant member superimposed on the plate and engaging said resistor element.

5. An electric radiant heater including a back reflector plate of insulating material formed with parallel ribs spaced apart to form air passages therebetween, said plate having air ducts extending therethrough in communication with the air passages, a flat slotted electric resistor element positioned on said ribs and over said air passages, an open-work refractory radiant member superimposed on the plate over the air passages and engaging said resistor element, and means for securing the radiant member to the reflector plate.

6. An electric radiant heater including a back reflector plate of insulating material formed with a series of groups of ribs, each

group comprising a plurality of ribs spaced apart to form air passages therebetween, said plate having grooves between said groups of ribs and air ducts extending through the plate in communication with the air passages, a flat electric resistor element comprising a series of connected slotted strips positioned with one strip over the air passages of each group of ribs, and an open-work refractory radiant member superimposed on the plate and engaging the resistor element, said radiant member having ribs entered in the grooves of the plate.

7. In an electric heater, a back plate having a front heat reflecting surface formed with spaced-apart projections having resistor contacting free ends and forming air passages therebetween, openings extending through the plate and communicating with said passages, a flat slotted resistor element bridging the space between adjacent projections and supported by the contacting free ends thereof, and means for retaining the resistor element in position on the free ends.

8. In an electric heater, a back plate, spaced apart projection elements on a face thereof forming air passages therebetween, openings extending through the back plate and communicating with the passages, a relatively flat resistor element bridging the space between adjacent projection elements and held on and supported by the projection elements.

In testimony whereof I affix my signature.

LOUIS LEBAU.