(No Model.) 4 Sheets—Sheet 1.

G. D. LOOMIS.

WELL DRILLING AND DRIVING MACHINE.

No. 565,909. Patented Aug. 18, 1896.

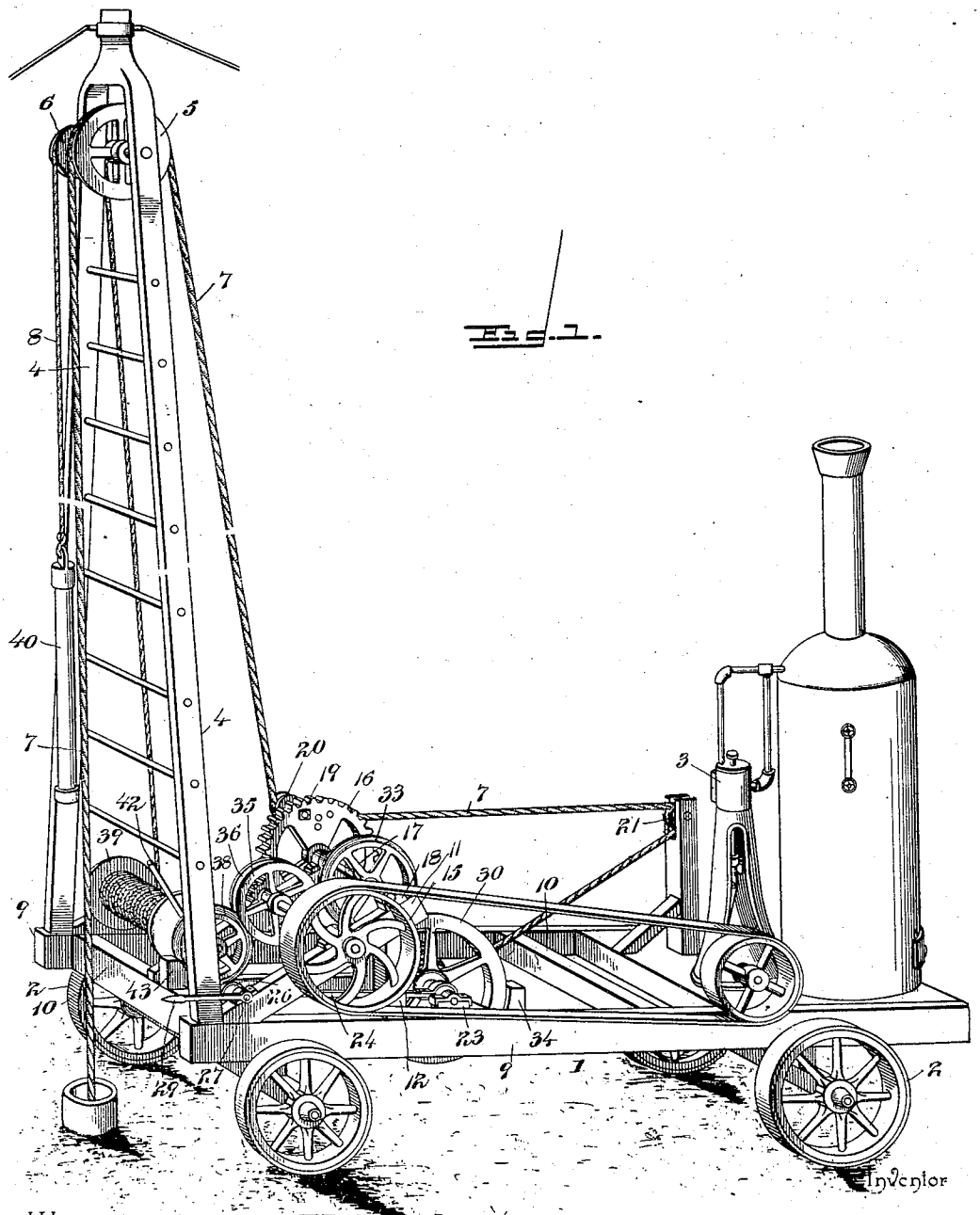

Fig. 1.

Inventor

Witnesses

E. K. Stewart

L. B. Richardson

George D. Loomis

By his Attorneys.

C. A. Snow & Co.

THE NORRIS PETERS CO., PHOTO-LITHO., WASHINGTON, D. C.

(No Model.) 4 Sheets—Sheet 2.

G. D. LOOMIS.

WELL DRILLING AND DRIVING MACHINE.

No. 565,909. Patented Aug. 18, 1896.

Fig. 2.

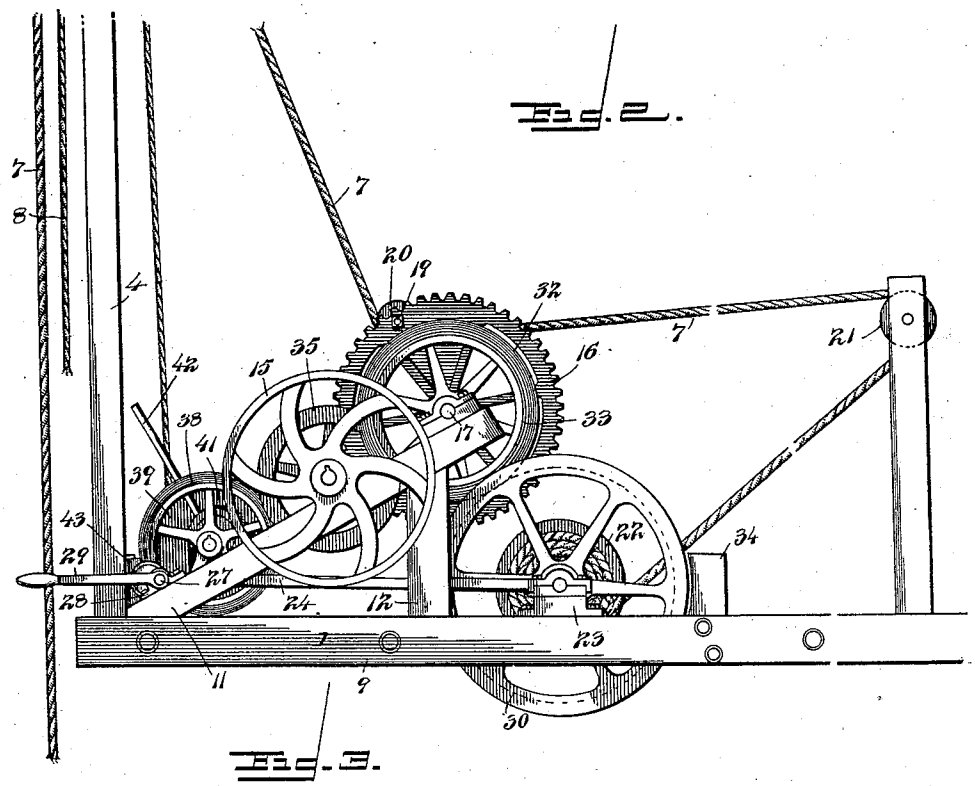

Fig. 3.

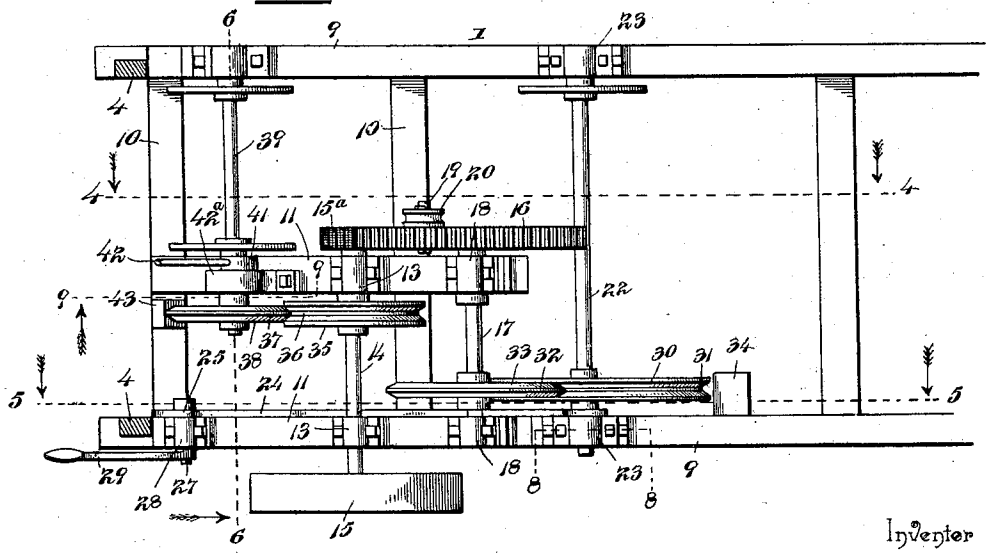

Inventor

Witnesses

E. K. Stewart.

D. P. Wilkinson.

George D. Loomis

By his Attorneys.

C. A. Snow & Co.

THE NORRIS PETERS CO., PHOTO-LITHO., WASHINGTON, D. C.

(No Model.) 4 Sheets—Sheet 3.

G. D. LOOMIS.

WELL DRILLING AND DRIVING MACHINE.

No. 565,909. Patented Aug. 18, 1896.

Fig. 4.

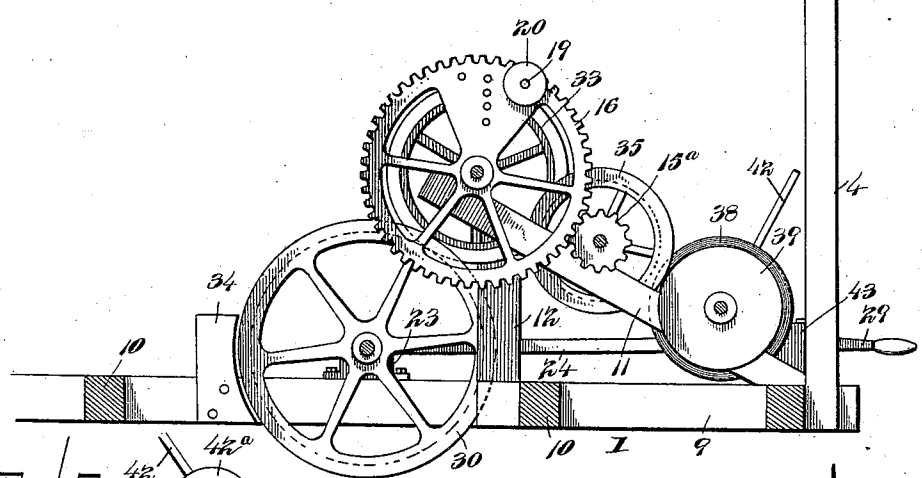

Fig. 9.

Fig. 5.

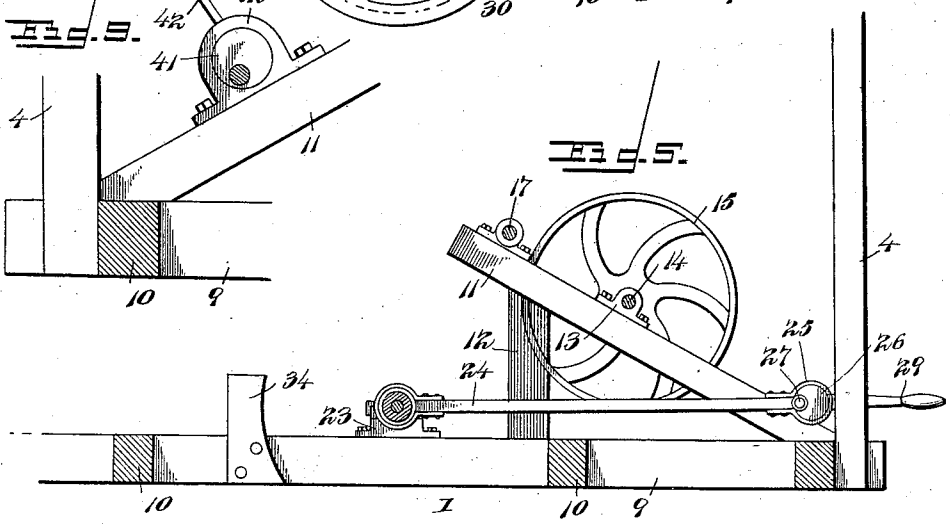

Witnesses

E. K. Stewart

D. P. Holtrauf Jr.

Inventor

George D. Loomis

By his Attorneys,

C. A. Snow & Co.

THE NORRIS PETERS CO., PHOTO-LITHO., WASHINGTON, D. C.

(No Model.) 4 Sheets—Sheet 4.

G. D. LOOMIS.

WELL DRILLING AND DRIVING MACHINE.

No. 565,909. Patented Aug. 18, 1896.

Fig. 6.

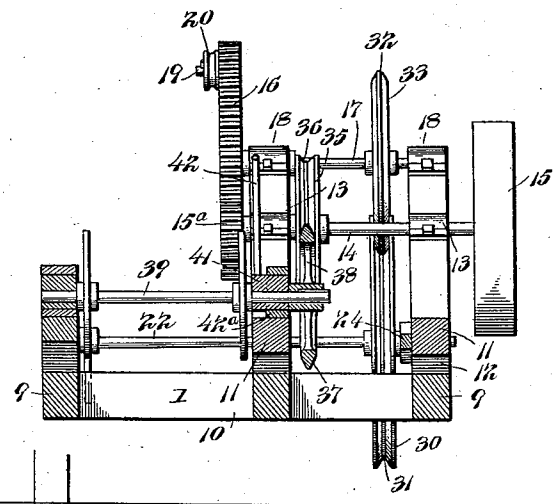

Fig. 8.

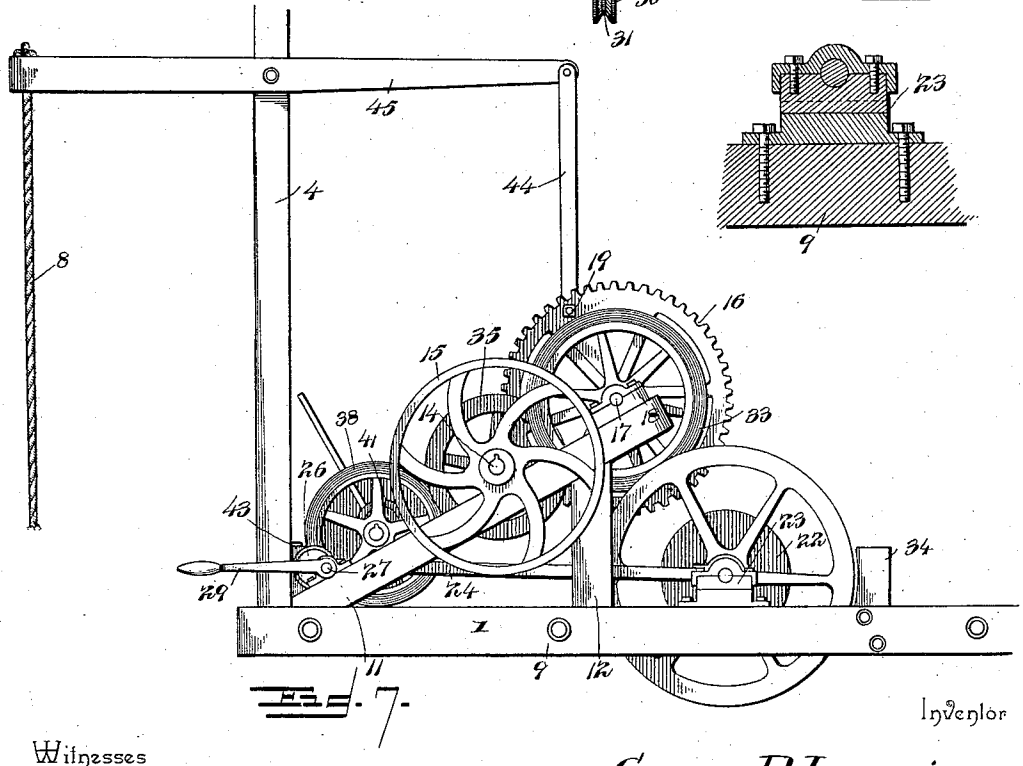

Fig. 7.

Witnesses
E. K. Stewart
L. P. Holmes

Inventor
George D. Loomis
By his Attorneys,
C. A. Snow & Co.

THE NORRIS PETERS CO., PHOTO-LITHO., WASHINGTON, D. C.

UNITED STATES PATENT OFFICE.

GEORGE DUDLEY LOOMIS, OF TIFFIN, OHIO.

WELL DRILLING AND DRIVING MACHINE.

SPECIFICATION forming part of Letters Patent No. 565,909, dated August 18, 1896.

Application filed November 14, 1895. Serial No. 568,954. (No model.)

To all whom it may concern:

Be it known that I, GEORGE DUDLEY LOOMIS, a citizen of the United States, residing at Tiffin, in the county of Seneca and State of Ohio, have invented a new and useful Well Drilling and Driving Machine, of which the following is a specification.

This invention relates to well-drilling apparatus; and it has for its object to effect certain improvements in apparatus of this character that are adapted for drilling and driving wells, and which may also be advantageously employed for driving fence-posts and the like.

To this end the main and primary object of the present invention is to provide a well-drilling apparatus having as few parts as possible, while at the same time accomplishing precisely the same results in a more efficient manner than the complicated well machinery in common use. In the attainment of this result the present invention not only dispenses with all wheels outside of the main frame excepting the drive-pulley, but also dispenses with the use of toothed clutches, chain-wheels, friction-belts, screw or ratchet feeding devices, bull-wheel ropes, &c., which are well-known parts of most well-drilling apparatus, and, while dispensing with these different parts of the ordinary apparatus, the present invention provides an apparatus capable of doing all the required work of drilling, driving, sand-pumping, hoisting out the tools and dropping the same into the well, and paying or feeding out the main drilling-cable or taking up the same when the work is progressing.

With these and other objects in view, which will readily appear as the nature of the invention is better understood, the same consists in the novel construction, combination, and arrangement of parts hereinafter more fully described, illustrated, and claimed.

In the drawings, Figure 1 is a perspective view of a well-drilling apparatus constructed in accordance with this invention. Fig. 2 is an enlarged side elevation thereof. Fig. 3 is a top plan view of the same. Fig. 4 is a longitudinal sectional view on the line 4 4 of Fig. 3. Fig. 5 is a similar view on the line 5 5 of Fig. 3. Fig. 6 is a transverse sectional view on the line 6 6 of Fig. 3. Fig. 7 is a detail elevation of a modified arrangement of the apparatus, showing one method of employing a walking-beam in connection with the spur crank-wheel. Fig. 8 is a detail sectional view on the line 8 8 of Fig. 3. Fig. 9 is a similar view on the line 9 9 of Fig. 3.

Referring to the accompanying drawings, 1 designates the main frame of the apparatus, which is usually mounted on the ground-wheels 2, so that it can be readily transported from place to place. The main frame 1 usually carries at one end an engine or motor 3 for driving the mechanism and supports at the end opposite the engine the ordinary upright derrick 4, which carries at its upper end the usual pulleys 5 and 6, around which respectively pass the main drilling-cable 7 and the sand-pump cable 8, to which reference will be more particularly made hereinafter.

The main frame 1 essentially consists of the opposite parallel side beams 9, connected at suitable points by the transverse frame-bars 10, and at one end adjacent to the derrick 4 the frame 1 has mounted thereon the inclined supporting-bars 11, supported at their high ends above the plane of the side beams 9 by the short brace-posts 12, and the said inclined bars 11 provide for the proper positioning of the several parts of the apparatus, so that the same will operate in the manner contemplated by the present invention. Mounted in suitable bearings 13, on the inclined supporting-bars 11, intermediate of their ends, is a short drive-shaft 14, carrying at its outer end outside of the frame the drive-pulley 15, which is suitably belted with the engine 3 to provide for communicating motion to the shaft 14. The inner end of the shaft 14 terminates at a point substantially in alinement with the longitudinal center of the frame 1, and has fitted thereon the pinion 15^a, which meshes with a larger spur crank-wheel 16. The spur crank-wheel 16 is mounted on the inner end of a short counter-shaft 17, journaled in suitable bearings 18, fitted on the upper ends of the inclined supporting-bars 11.

The spur crank-wheel 16 has fitted therein at a point near its periphery a wrist-pin 19, on which is preferably mounted a crank-roller 20, under which passes the main drilling-cable 8. The main drilling-cable 8 extends from the crank-roller 20 around a fixed guide-

pulley 21, supported above the frame 1 near one end, and from the fixed guide-pulley 21 the main drilling-cable 7 extends to and winds and unwinds on the main-cable spool 22, the shaft of which spool is journaled in movable bearing-boxes 23, mounted on top of the frame 1, in a plane below the short counter-shaft 17. The shaft of the main-cable spool 22 has suitably connected thereto one end of an eccentric-rod 24, the other end of which rod connects with an eccentric-strap 25, fitted on an eccentric disk 26, mounted on one end of a short shaft 27, turning in a bearing-box 28, secured on top of one of the bars 11, and the other end of said shaft 27 has fitted thereto one end of an adjusting-lever 29, the manipulation of which provides for the adjustment of the main-cable spool to adjust the position of the narrow friction-wheel 30.

The narrow friction-wheel 30 is mounted on the shaft of the main-cable spool 22, near one end of said shaft, and is provided with a V-shaped grooved periphery 31, that is adapted to have a frictional engagement with the double-beveled pointed periphery 32 of an adjacent narrow friction-wheel 33, that is mounted fast on the short counter-shaft 17, between the bearings for such shaft. At a point substantially opposite the location of the friction-wheel 30 is arranged a fixed block 34, that is secured fast to the frame 1 adjacent to the periphery of the wheel 30, so that by manipulating the lever 29 the wheel 30 can be thrown into frictional contact with the brake-block 34 to check or stop the rotation of the spool 22, or thrown into engagement with the wheel 33 to provide for rotating said spool in a direction to wind up the main drilling-cable when necessary, as will be readily understood by those skilled in the art.

The short drive-shaft 14, which transmits motion to the crank-wheel 16 and to the main-cable spool in the manner described, has fitted thereon at an intermediate point a friction-wheel 35, provided with a V-shaped peripheral groove 36, that is adapted to frictionally receive the double-beveled pointed periphery 37 of the adjacent friction-wheel 38, mounted on one end of the shaft of the sand-reel 39, on which winds and unwinds the sand-pump cable 8 for controlling the movements of the sand-pump 40. (Illustrated in Fig. 1 of the drawings.)

The end of the shaft of the sand-reel which carries the friction-wheel 38 is mounted in an eccentric bearing-collar 41, turning in the bearing-box 42^a, mounted on one of the inclined supporting-bars 11, and the inner end of said eccentric bearing-collar 41 has attached thereto one end of the hand-lever 42, which when adjusted throws the peripheral edge of the wheel 38 into the groove of the wheel 35 to impart motion to the sand-wheel, or against the fixed brake-block 43, mounted at one end of the frame 1, to provide for checking or stopping the rotation of the reel 39 at the proper time.

While the crank-wheel 16 has been described as being provided with a crank-roller, which by the rotation of the crank-wheel elevates and depresses the main drilling-cable to raise and lower the spudding-tool, it will be obvious that the wrist-pin of said crank-wheel may be connected with a walking-beam in any suitable manner, such as illustrated in detail in Fig. 7 of the drawings. In this figure of the drawings the wrist-pin of the crank-wheel is illustrated as having connected thereto one end of a pitman 44, the other end of which is connected to one end of a walking-beam 45, fulcrumed in the derrick 4, and having connected to the outer vibrating end thereof the cable carrying the string of tools for the purpose of drilling deeper wells in the usual manner.

When power is applied to the drive-shaft 14, motion is communicated to the crank-wheel 16, which, through the medium of its wrist-pin connection, imparts an up-and-down motion to the main drilling-cable to provide for drilling or driving purposes. When the drilling or driving operation has reached the desired point and it becomes necessary to wind up the main drilling-cable, the lever 29 is manipulated so as to draw the friction-wheel 30 into frictional engagement with the wheel 33, which will immediately cause the main-cable spool 22 to rotate and rapidly wind up the cable. After the cable 7 has been wound up sufficiently and it is desired to use the sand-pump for cleaning out the hole, the brake is taken off of the sand-reel 39, so as to allow the sand-pump cable to unreel to permit the sand-pump to pass down to the bottom of the well. To draw the sand-pump out of the well, the lever 42 is manipulated to adjust the wheel 38 into engagement with the wheel 35, which will cause the sand-reel to rotate in a direction to wind up its cable and elevate the sand-pump. It will of course be understood that in unreeling the cables from either the main-cable spool or the sand-reel the adjustment of the friction-wheels 30 and 38, respectively, against the blocks 34 and 43 will provide for unreeling said cables at any desired speed.

From the above it is thought that the construction, operation, and many advantages of the herein-described apparatus will be readily apparent to those skilled in the art, and it will be understood that various changes in the form, proportion, and the minor details of construction may be resorted to without departing from the principle or sacrificing any of the advantages of this invention.

Having thus described the invention, what is claimed, and desired to be secured by Letters Patent, is—

1. In a machine of the class described, the main frame, the main drive-shaft mounted on the frame and carrying a pinion at one end, a short counter-shaft carrying at one end a spur-wheel meshing with the pinion and provided near its periphery with a crank-

pin having a suitable connection with the main drilling-cable for raising and lowering the latter, a narrow friction-wheel mounted on said counter-shaft and provided with a double-beveled pointed periphery, the main-cable spool having its shaft mounted in movable bearings and carrying a narrow friction-wheel provided with a V-shaped groove adapted to receive the pointed periphery of the wheel on the counter-shaft, and means for adjusting the shaft of the main-cable spool, substantially as set forth.

2. In a well-drilling apparatus, the combination with the main frame and the main drilling-cable; of a short drive-shaft mounted on the frame and carrying at one end a pinion, a counter-shaft arranged adjacent to the drive-shaft and carrying at one end a spur crank-wheel meshing with the pinion and provided near its periphery with a wrist-pin, a crank-roller mounted on the wrist-pin and receiving thereunder the main drilling-cable, a narrow friction-wheel mounted on said counter-shaft and provided with a beveled periphery, the main-cable spool having its shaft mounted in movable bearings and carrying a narrow friction-wheel provided with a V-shaped groove adapted to receive the pointed periphery of the wheel on the counter-shaft, and means for adjusting the shaft of the main-cable spool, substantially as set forth.

In testimony that I claim the foregoing as my own I have hereto affixed my signature in the presence of two witnesses.

GEORGE DUDLEY LOOMIS.

Witnesses:
W. S. CRAMER,
HARRY TAGGART.