(12) INTERNATIONAL APPLICATION PUBLISHED UNDER THE PATENT COOPERATION TREATY (PCT)

(19) World Intellectual Property Organization
International Bureau

(43) International Publication Date
7 June 2012 (07.06.2012)

WIPO | PCT

(10) International Publication Number
WO 2012/075480 A2

(51) International Patent Classification:
A01K 7/00 (2006.01) *A01K 7/02* (2006.01)

(21) International Application Number:
PCT/US201 1/063213

(22) International Filing Date:
4 December 201 1 (04.12.201 1)

(25) Filing Language: English

(26) Publication Language: English

(30) Priority Data:
61/419,836 4 December 2010 (04. 12.2010) US

(71) Applicant *(for all designated States except US):* **PIONEER PET PRODUCTS, LLC** [US/US]; N144 W5660 Pioneer Road, Cedarburg, WI 53012 (US).

(72) Inventors; and

(75) Inventors/Applicants *(for US only):* **LIPSCOMB, John, M.** [US/US]; 193 Granville Road, Cedarburg, WI 53012 (US). **HE, Qing** [CN/US]; 1845 Turnpike Street, North Andover, MA 01845 (US).

(74) Agent: **STEIN, David, D.;** Boyle Fredrickson SC, 840 North Plankinton Avenue, Miwaukee, WI 53203 (US).

(81) Designated States *(unless otherwise indicated, for every kind of national protection available):* AE, AG, AL, AM, AO, AT, AU, AZ, BA, BB, BG, BH, BR, BW, BY, BZ, CA, CH, CL, CN, CO, CR, CU, CZ, DE, DK, DM, DO, DZ, EC, EE, EG, ES, FI, GB, GD, GE, GH, GM, GT, HN, HR, HU, ID, IL, IN, IS, JP, KE, KG, KM, KN, KP, KR, KZ, LA, LC, LK, LR, LS, LT, LU, LY, MA, MD, ME, MG, MK, MN, MW, MX, MY, MZ, NA, NG, NI, NO, NZ, OM, PE, PG, PH, PL, PT, QA, RO, RS, RU, RW, SC, SD, SE, SG, SK, SL, SM, ST, SV, SY, TH, TJ, TM, TN, TR, TT, TZ, UA, UG, US, UZ, VC, VN, ZA, ZM, ZW.

(84) Designated States *(unless otherwise indicated, for every kind of regional protection available):* ARIPO (BW, GH, GM, KE, LR, LS, MW, MZ, NA, RW, SD, SL, SZ, TZ, UG, ZM, ZW), Eurasian (AM, AZ, BY, KG, KZ, MD, RU, TJ, TM), European (AL, AT, BE, BG, CH, CY, CZ, DE, DK, EE, ES, FI, FR, GB, GR, HR, HU, IE, IS, IT, LT, LU, LV, MC, MK, MT, NL, NO, PL, PT, RO, RS, SE, SI, SK, SM, TR), OAPI (BF, BJ, CF, CG, CI, CM, GA, GN, GQ, GW, ML, MR, NE, SN, TD, TG).

Published:

— *without international search report and to be republished upon receipt of that report (Rule 48.2(g))*

WO 2012/075480 A2

(54) Title: WATER WHEEL AERATOR ASSEMBLY FOR PET FOUNTAIN

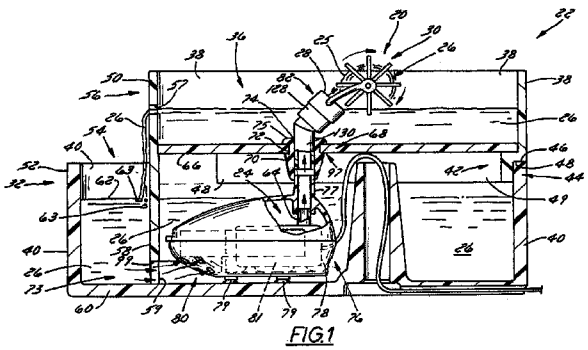

FIG.1

(57) Abstract: An aerator assembly for an animal watering device having a rotor mount removably inserted in a discharge opening of a cover of the device and a rotor carried by the mount that is rotated by discharged water. The mount includes a conduit having one end inserted in the cover and an outlet at its opposite end conveying a discharged stream of water against rotor baffles causing rotation. The mount includes an arm that offsets an axis of rotation of the rotor relative to the stream so water impinges against a baffle. A pin can be included that engages the arm that is received through a rotor hub rotatively attaching the rotor to the arm. Such an aerator not only aerates water discharged during fountain operation, it also reduces noise by reducing splashing. The present invention is also directed to a pet fountain equipped with such an aerator assembly.

WATER WHEEL AERATOR ASSEMBLY FOR PET FOUNTAIN

FIELD

The present invention relates to an aerator for pet watering devices and more particularly to an in-line flow disposed water wheel aerator assembly for a pet fountain.

BACKGROUND

It is desired to maintain water recirculating in a pet fountain in as fresh of state as possible until water is added or replaced. While pet fountains have employed a filter in the past to help maintain freshness, improvements remain desirable.

What is needed is an arrangement that enhances freshness of water recirculating in a pet fountain. What is also needed is a water freshness-enhancing arrangement that is usable in a recirculating pet fountain.

SUMMARY

The present invention is directed to an aerator assembly for a recirculating pet fountain which helps maintain water freshness by aerating water discharged by a pump from a basin of the fountain into a fountain cover carrying the aerator assembly. The aerator assembly includes a rotor mount of tubular construction that is inserted into a discharge opening in the fountain cover to attach the aerator assembly to the cover. The rotor mount rotatively carries a rotor having a plurality of radially outwardly extending water-deflecting water flow directors that rotate when water is discharged from the discharge opening in the cover through an outlet of a tubular conduit formed of the rotor mount.

Part of the tubular conduit of the rotor mount is removably inserted and frictionally retained in that opening formed in the cover and is in line in fluid-flow communication with a pump that conveys water from the basin to the cover during fountain operation. In a preferred embodiment, the conduit has one end in fluid-flow communication with a discharge tube of the pump and the conduit outlet formed in its opposite end that directs water pumped by the pump against part of the rotor to cause rotor rotation.

The rotor mount includes at least one rotor mounting arm that disposes the water flow directors relative to the outlet in the rotor mount conduit so that a stream of water discharged

from the conduit impinges against the water flow directors causing the rotor to rotate. In a preferred embodiment, the rotor mount has a fork with a pair of arms that offset a hub of the rotor relative to the rotor mount conduit outlet so water discharged from the conduit impinges against the water flow directors in a manner that causes rotor rotation.

Each rotor mounting arm can include a knuckle at or adjacent its free end having an opening defining a trunnion receiving a pin upon which the hub of the rotor can be rotatively carried. Each arm is configured to offset the hub and hence the rotor relative to a center of the rotor mount conduit outlet so water discharged from the conduit impinges against one of the flow directors in a manner that causes rotor rotation.

In a preferred embodiment, each flow director is a baffle having a width substantially as wide as the width or diameter of the tubular conduit opening. Each baffle has a length that enables the outer radial edge of each baffle to extend radially outwardly and substantially overlie a portion of the outlet opposite the offset imparted by each arm.

These and various other features, aspects, and advantages of the present invention will be made apparent from the following description of the drawings and detailed description.

DRAWING DESCRIPTION

One or more preferred exemplary embodiments of the invention are illustrated in the accompanying drawings in which like reference numerals represent like parts throughout and in which:

Figure 1 is a perspective view of a pet fountain equipped with a water wheel aerator assembly constructed in accordance with the present invention having a water wheel being rotated in a clockwise direction by water discharged from a pump;

Figure 2 is a fragmentary cross sectional view of the aerator inserted into a discharge opening in a cover of another embodiment of a pet fountain showing the water wheel being rotated by discharged water in a counterclockwise direction;

Figure 3 is an exploded perspective view of one preferred embodiment of a water wheel aerator;

Figure 4 is an assembled perspective view of another preferred water wheel aerator;

Figure 5 is a side elevation view of the water wheel aerator of Figure 4;

Figure 6 is a rear plan view of the water wheel aerator;

Figure 7 is a top plan view of the water wheel aerator;

Figure 8 is another side elevation view of the water wheel aerator;

Figure 9 is a front plan view of the water wheel aerator; and

Figure 10 is a bottom plan view of the water wheel aerator.

Before explaining one or more embodiments of the invention in detail, it is to be understood that the invention is not limited in its application to the details of construction and the arrangement of the components set forth in the following description or illustrated in the drawings. The invention is capable of other embodiments, which can be practiced or carried out in various ways. Also, it is to be understood that the phraseology and terminology employed herein is for the purpose of description and should not be regarded as limiting.

DETAILED DESCRIPTION

Figure 1 illustrates a preferred embodiment of an aerator assembly 20 for a recirculating pet fountain 22 that includes a pump 24 that discharges a stream 25 of water through an outlet 28 of the aerator assembly 20 causing the water 26 to impinge against a rotor 30 of the assembly 20 creating turbulence in the discharged water helping oxygenate the water. The aerator assembly 20 is a water wheel that not only helps oxygenate water 25 discharged from the aerator assembly outlet 28 but also helps prevent splashing while creating a visually enticing "bubbling" effect that is particularly attractive to cats.

The pet fountain 22 shown in Figure 1 has a lower basin 32 in which water is received and which can hold a supply of water that the pump 24 recirculates during fountain operation. The fountain 22 also has a cover 34 that can also be configured as or with an upper basin 36 that receives water discharged from the aerator assembly outlet 28, including after the water has impinged against the rotor 30. Upper basin 36 can be open, such as shown in Figure 1, permitting an animal to drink water 26 in the basin 36. Cover 34 overlies the pump 24 such that pump 24 is hidden by the cover 34.

Cover 34 includes a wall 38 that is configured to mate with part of an outer wall 40 of the lower basin 32 in a manner that locates the cover 34 relative to the lower basin 32 and helps retain the cover 34 in place relative to the lower basin 32. Cover wall 38 has a bottom section 42 configured with a seat 44 that receives an outer edge 46 of lower basin wall 40 with the seat 44 including an abutment 48 that abuts lower basin wall edge 46 and a lip 49

that overlaps with part of the lower basin wall 40 to help locate the cover 34 as well as help keep the cover 34 in place once assembled to the basin 40.

Cover wall 38 mates via seat 44 with basin wall 40 along a substantial portion thereof to help locate and keep the cover 34 in place along at least one of a plurality of horizontal directions when seated on the basin 32. For example, where the lower basin 32 is circular, seat 44 can extend 180 degrees or more in extent to locate and help retain of the cover 34 on the lower basin 32. Where the lower basin 32 includes a plurality of walls, e.g., more than one lower basin wall 40, seat 44 extends along a portion of a plurality of the walls 40 to locate and help retain the cover 34 on the lower basin 32. Where oval or oblong, seat 44 extends along spaced apart wall sections of the lower basin wall 40 that are disposed opposite one another and can be disposed adjacent one another. Lower basin 32 can be generally Vee shaped dividing the lower basin wall 40 into separate wall sections along which extends at least a portion of seat 44.

Cover wall 38 has an upraised section 50 that is disposed inwardly and spaced from a section 52 of basin outer wall 40 to provide an open access area 54 big enough to allow an animal to drink from. Cover 38 can be configured with a weir 56 formed in part of cover wall 38 through which water 26 flows when it reaches a sufficient height in the upper basin 36 formed in the cover 38. During fountain operation, water 26 overflowing the weir 56 falls down into water in the open animal drinking access area 54 of the lower basin 32. In the preferred embodiment shown in Figure 1, the weir 56 includes a plurality of spaced apart bores 57 (only one of which is shown in Figure 1) through which water 26 overflows down into the open animal drinking access area 54 below.

Cover wall section 50 includes a skirt 58 spaced above a bottom 60 of the lower basin 32 a sufficient distance so as to enable water from the cover 38 flowing into the lower basin drinking access area 54 to flow underneath the cover 34 so it can be drawn into the pump 24. Skirt 58 extends downwardly a sufficient distance below the water line 62 of the water in the lower basin 32 such that the skirt 58 functions as a debris skimmer that helps prevent debris floating in the water 26 in the lower basin drinking access area 54 from being drawn into the pump 24. As is shown in Figure 1, debris skimming skirt 58 extends to a point greater than half of the height of the adjacent lower basin wall section 52 and that is no more than about one-quarter inch above the basin bottom 60 to permit water to freely flow from the drinking

CLAIMS

What is claimed is:

1. An aerator assembly for a pet fountain comprising:

rotor mount comprising an outlet from which water is discharged; and

a rotor disposed downstream of the outlet so that water discharged from the outlet causes rotor rotation.

2. The pet fountain aerator assembly of claim 1 wherein the rotor mount comprises (1) a tubular conduit having the outlet at one end, and (2) an outwardly extending arm that carries the water wheel.

3. The pet fountain aerator assembly of any one of claims 1 and 2 wherein the arm spaces the water wheel axially outwardly of the outlet and offsets the rotor from a center of the outlet.

4. The pet fountain aerator assembly of any one of claims 1-3 wherein the rotor mount comprises a pair of outwardly extending and spaced apart arms.

5. The pet fountain aerator assembly of claim 4 wherein each one of the arms comprises a trunnion and further comprising a pin carried by the trunnions that carries the rotor.

6. The pet fountain aerator assembly of claim 5 wherein the rotor comprises a hub that receives the pin therethrough and a plurality of flow directors.

7. The pet fountain aerator assembly of claim 6 wherein each flow director comprises a baffle.

8. The pet fountain aerator assembly of claim 7 wherein each baffle has a width substantially as wide as the outlet.

9. The pet fountain aerator assembly of claim 8 wherein each baffle has a length enabling an outer edge of the baffle to substantially overlie a side of the outlet opposite the offset.

10. An aerator assembly for a pet fountain comprising:

a rotor comprised of a plurality of pairs of radially outwardly water-deflecting baffles; and

a rotor mount rotatively carrying the rotor, the rotor mount comprising a tubular conduit removably received in a discharge opening of the pet fountain and having an outlet directing water flow discharged from the discharge opening through the conduit against the rotor rotating the rotor.

11. The pet fountain aerator assembly of claim 10 wherein rotor comprises a plurality of radially outwardly extending flow directors and the rotor mount comprises a fork rotatively carrying the rotor that offset a rotational axis of the rotor from a center line of the outlet of the conduit of the rotor mount positioning at least one flow director in line with the outlet when the rotor is rotating.

12. The pet fountain aerator assembly of claim 11 wherein the rotor mount comprises a pair of spaced apart arms that define the fork.

13. The pet fountain aerator assembly of any one of claims 11 and 12 wherein the fork carries a trunnion that carries a pin that carries the rotor.

14. The pet fountain aerator assembly of any one of claims 11-13 wherein the rotor comprises a hub.

15. The pet fountain aerator assembly of any one of 14 wherein the pin is received through the pin and by the trunnion.

16. The pet fountain aerator assembly of any one of claims 10-15 wherein the rotor mount comprises a stop that abuts against a portion surrounding the watering device discharge opening when the rotor mount is inserted into the watering device discharge opening.

17. The pet fountain aerator assembly of claim 10 wherein the pin comprises a head at one end that abuts one of the rotor mount arms and a groove at its opposite end that engages a detent of the other one of the arms.

18. The pet fountain aerator assembly of claim 17 wherein the pin comprises a portion journalled for rotation disposed between the ends of the pin.

19. The pet fountain aerator assembly of claim 17 wherein each one of the arms comprises a bore therethrough through which the pin extends with the bores being generally axially aligned and wherein the detent comprises a projection extending radially inwardly within one of the arm bores that is received in the groove in the pin.

20. A pet fountain comprising:

a basin in which water is received;

a cover carried by the basin having a discharge opening formed therein;

a pump disposed in the basin and having a discharge tube from which water is expelled through the discharge opening in the cover; and

an aerator assembly having a rotor mount with a tubular fluid conduit inserted into the discharge opening formed in the cover and a rotor rotatively carried by the rotor mount that is rotated by water discharged from the tubular fluid conduit.

21. The pet fountain of claim 20 wherein the rotor comprises a plurality of pairs of radially outwardly baffles against which water discharged from the tubular fluid conduit impinges.

22. The pet fountain of claim 21 wherein (a) the fluid conduit has one end in fluid flow communication with the pump discharge tube and the other end comprising an outlet disposed adjacent the baffles, and (b) the rotor mount comprises an arm carrying the rotor permitting rotation of the rotor relative thereto with the arm offsetting a rotational axis of the rotor relative to a center line of the conduit outlet such that the center line is spaced from and does not pass through the rotor rotational axis.

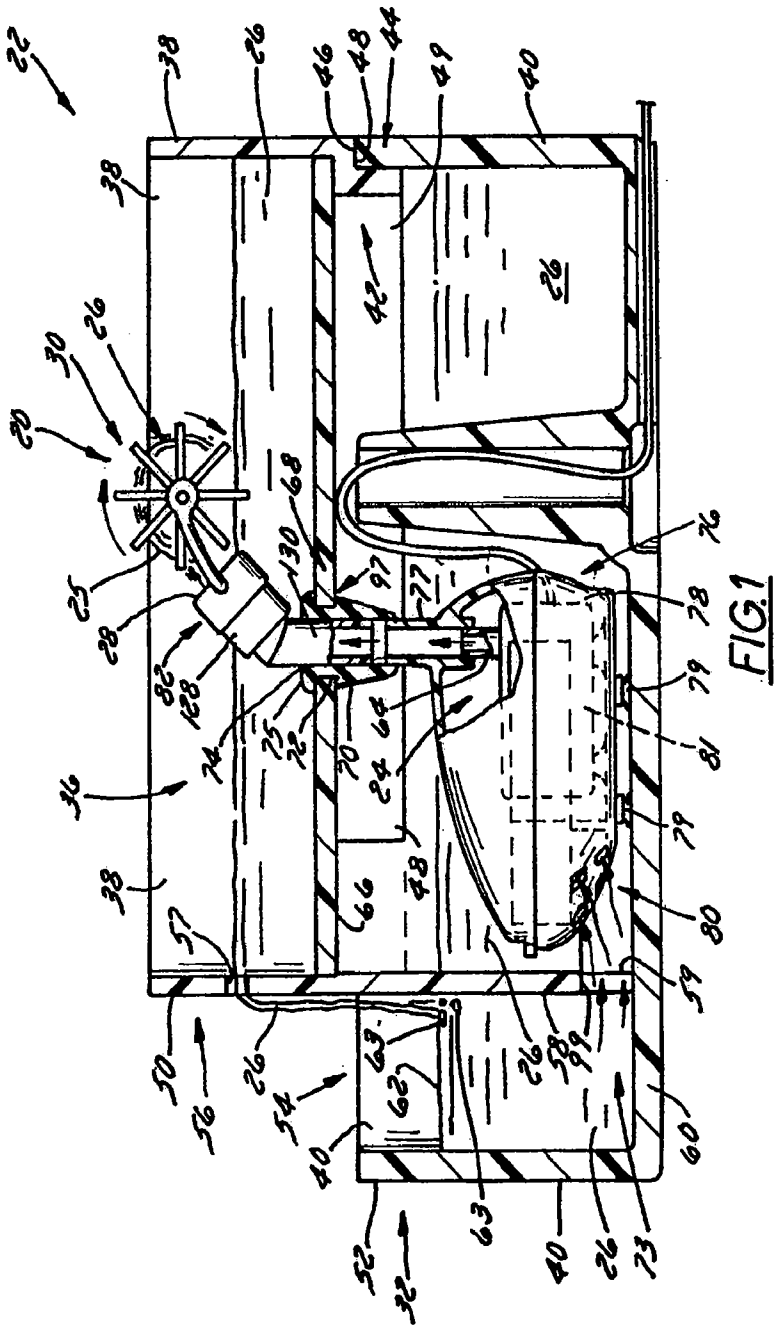

FIG.1

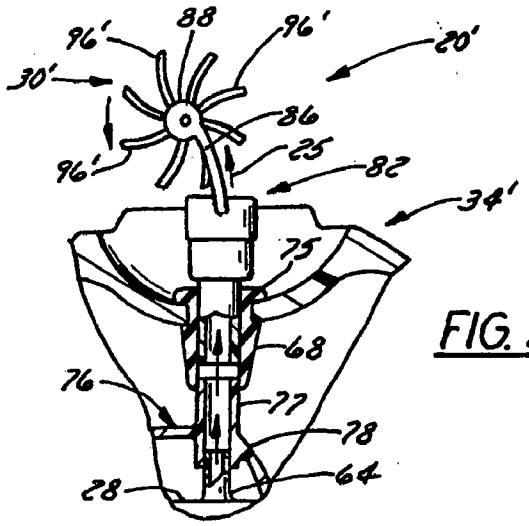
96'
88
96'
20'
30'
86
96'
25
82
34'
75
68
76
77
78
28
64

FIG. 2

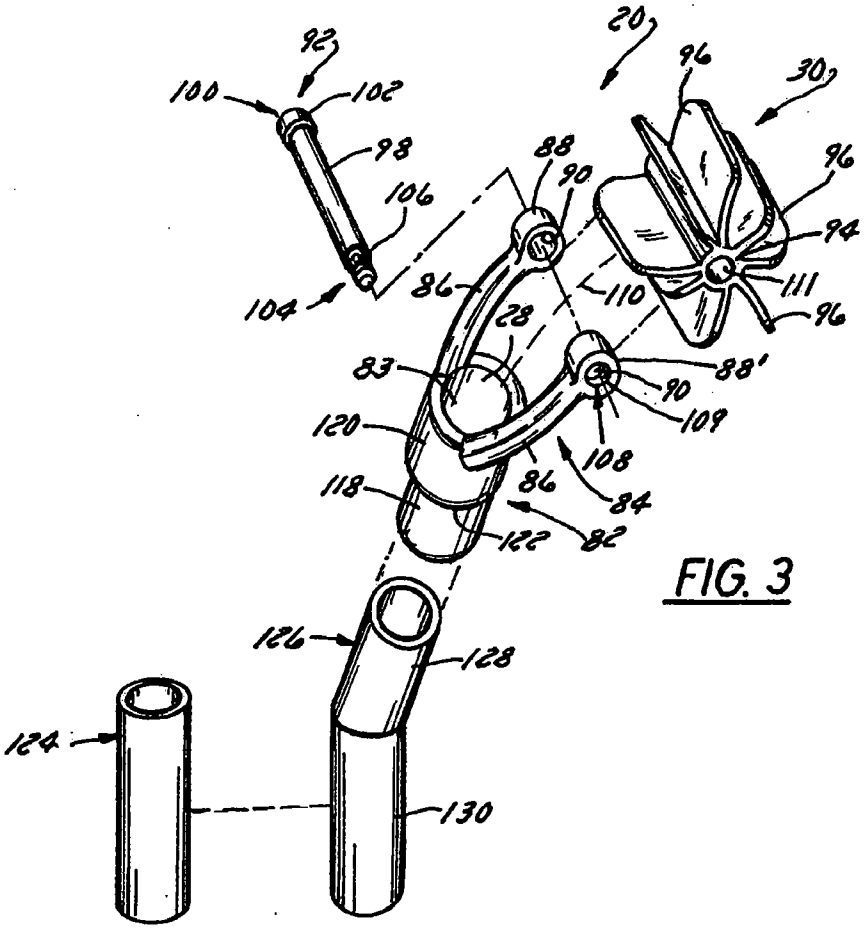
92
20
96
30
100
102
98
88
90
96
106
94
104
86
110
111
28
96
83
88'
90
120
109
108
86
84
118
122
82
126
128
124
130

FIG. 3

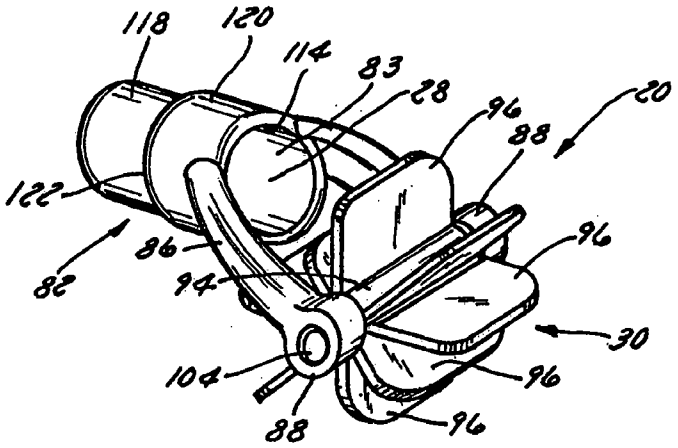

FIG. 4

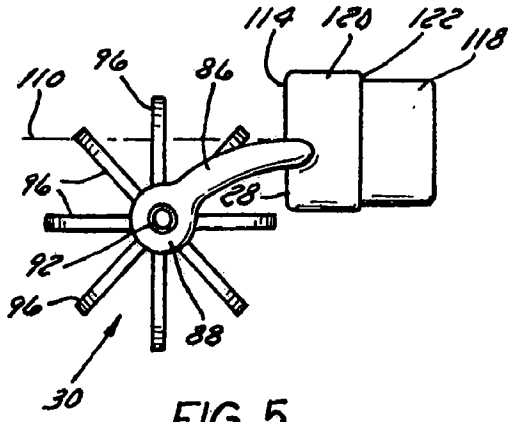

FIG. 5

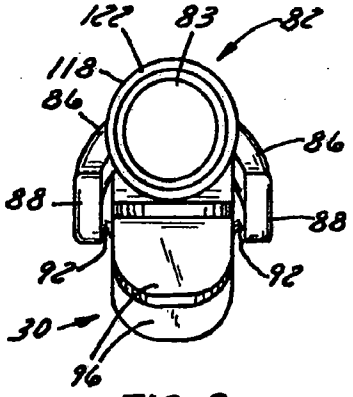

FIG. 6

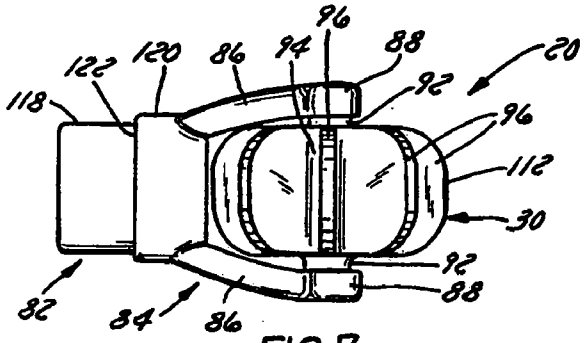

FIG. 7

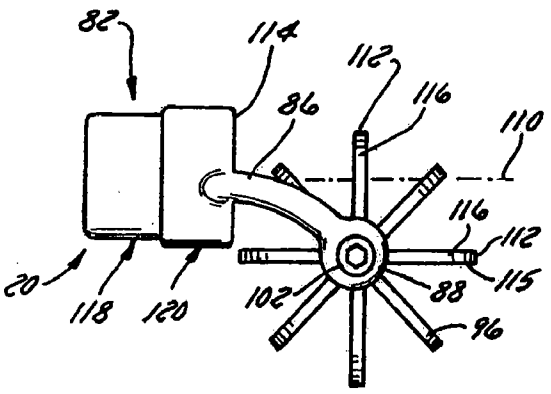

FIG. 8

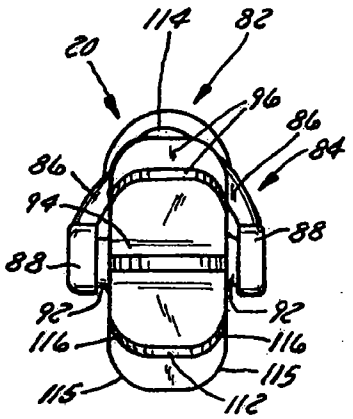

FIG. 9

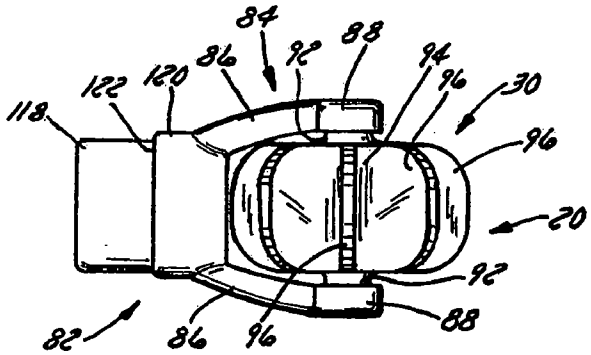

FIG. 10