R. M. BECKER.

COMBINED TYPE WRITING AND COMPUTING MACHINE.

APPLICATION FILED JUNE 11, 1914.

1,296,355. Patented Mar. 4, 1919.

2 SHEETS—SHEET 1.

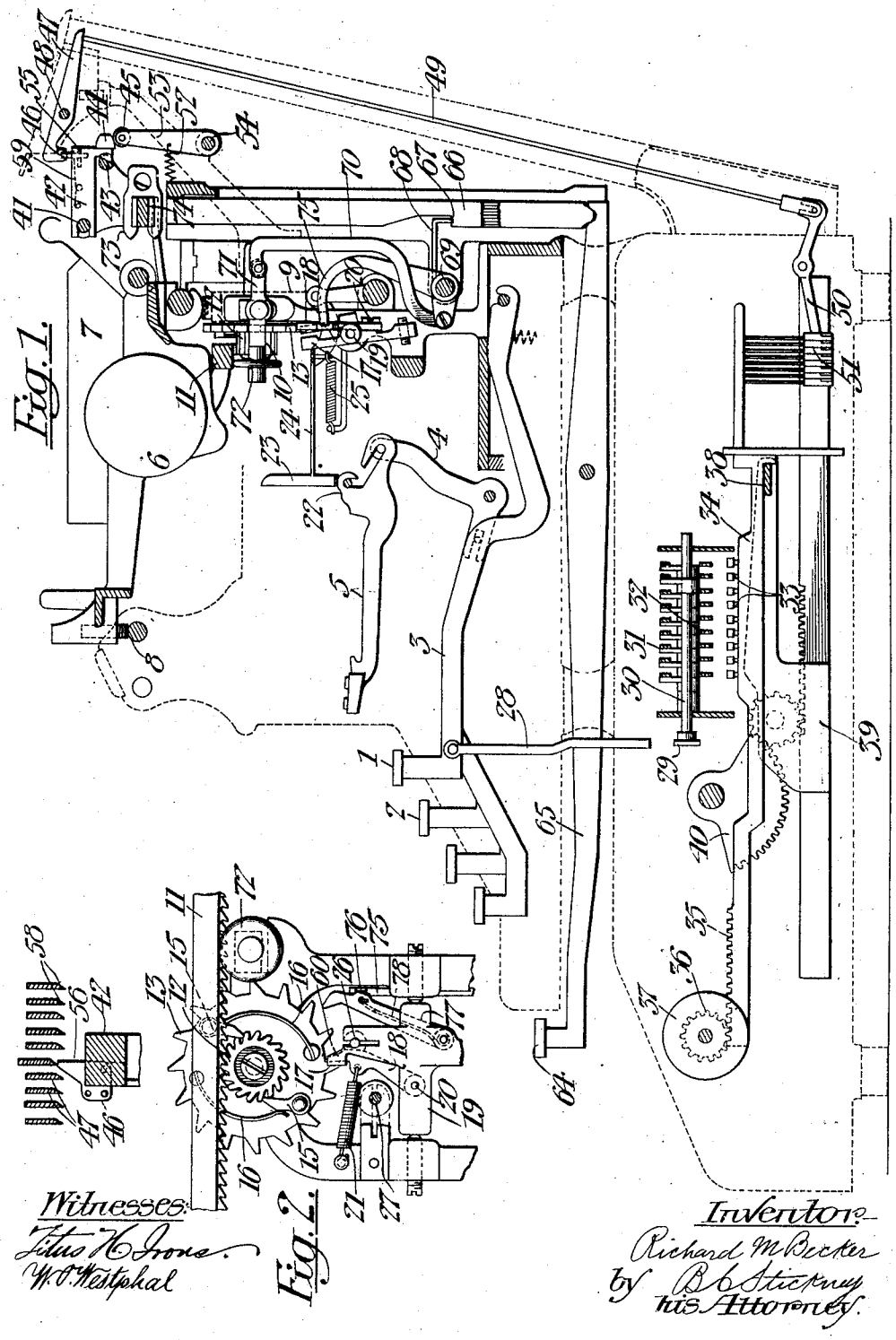

R. M. BECKER.

COMBINED TYPE WRITING AND COMPUTING MACHINE.

APPLICATION FILED JUNE 11, 1914.

1,296,355.

Patented Mar. 4, 1919.

2 SHEETS—SHEET 2.

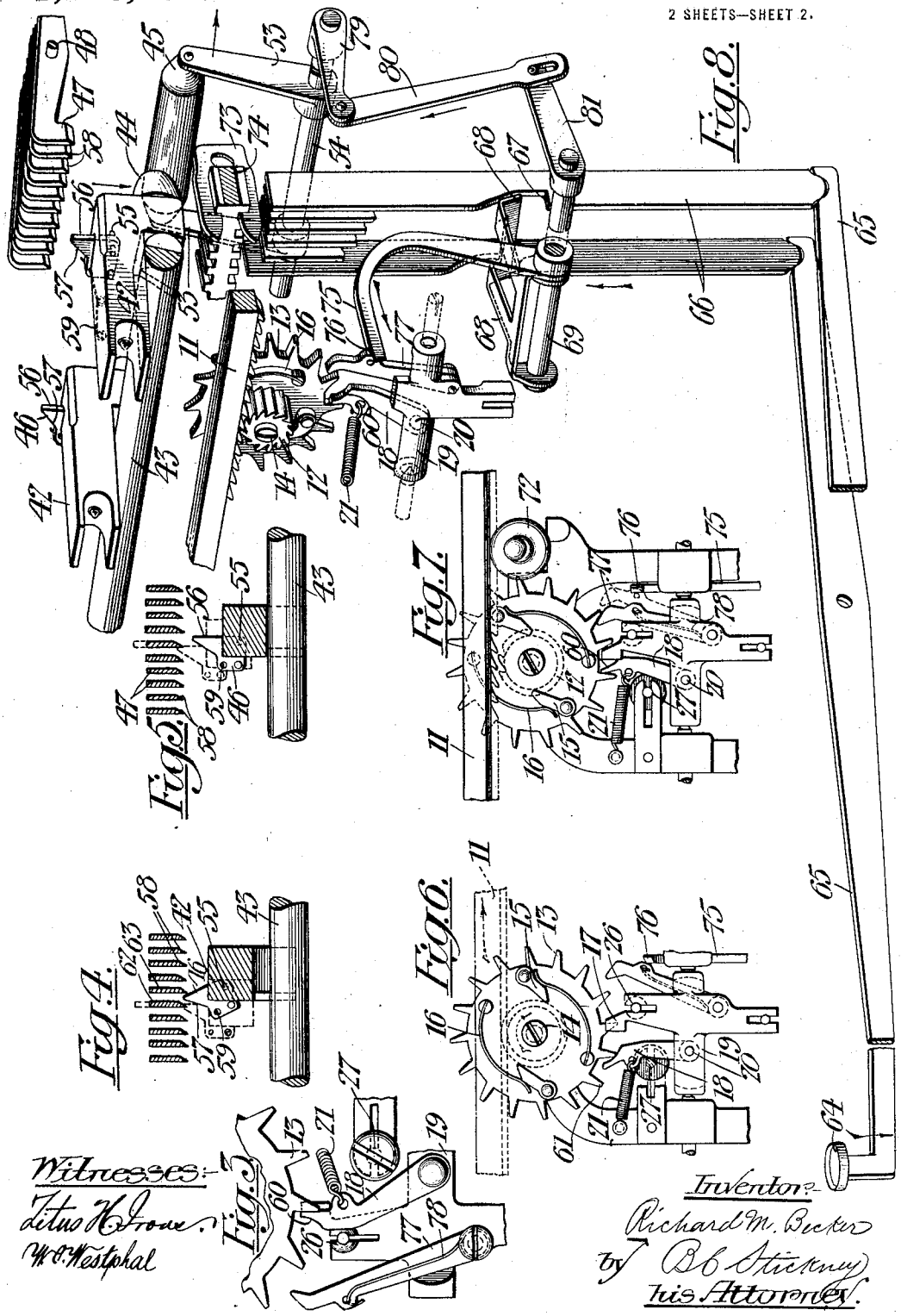

Witnesses:-
Titus H. Crowe.
W. C. Westphal

Inventor:-
Richard M. Becker
by B. C. Stickney
his Attorney.

UNITED STATES PATENT OFFICE.

RICHARD M. BECKER, OF BROOKLYN, NEW YORK, ASSIGNOR, BY MESNE ASSIGNMENTS, TO UNDERWOOD COMPUTING MACHINE COMPANY, OF NEW YORK, N. Y., A CORPORATION OF NEW YORK.

COMBINED TYPE-WRITING AND COMPUTING MACHINE.

1,296,355. Specification of Letters Patent. Patented Mar. 4, 1919.

Application filed June 11, 1914. Serial No. 844,421.

To all whom it may concern:

Be it known that I, RICHARD M. BECKER, a citizen of the United States, residing in Brooklyn borough, in the county of Kings, city and State of New York, have invented certain new and useful Improvements in Combined Type-Writing and Computing Machines, of which the following is a specification.

This invention relates to a combined type-writing and computing machine of the Underwood-Hanson type, such as that shown in my prior application, No. 697,393, filed May 15, 1912 (now Patent No. 1,243,669, dated October 16, 1917).

In the Underwood-Hanson combined type-writing and computing machine, the type-writer carriage as it travels step by step in a letter-feeding direction, controls the selection of the denominations of the computing mechanism, so that as each numeral key is struck to write a digit on the work sheet carried by the carriage, the same digit will be accumulated in the computing mechanism in a denomination or order corresponding to that in which it is written on the work sheet.

To accumulate the digits in this type of machine, there are provided a series of denominational members in the form of bars having pins settable thereon corresponding to the values of the numeral keys.

The numeral keys actuate a setting mechanism including one setting linkage for each numeral key, which setting linkages are common to all of the pin-bearing bars. That is to say, a setting linkage may set a pin on any one of said bars according to the denomination being written in at the particular instant that a numeral key is operated. To do this, the carriage in its travel brings in play *seriatim*, each of the denominational bars, and moves it away from its fellows, so that a pin can be set up thereon.

For this purpose the carriage carries a tappet, which engages *seriatim* with a series of jacks arranged in juxtaposition to the carriage, so as to actuate these jacks. The jacks in turn operate a set of transportation linkages, which in turn shift the pin-bearing bars individually away from their fellows. When the tappet is in its active position, and in a computing zone, a dog carried thereby will come *seriatim* into engagement with each of the jacks, to operate them individually as the carriage travels in a letter-feeding direction.

If, for any reason, the carriage is returned for the purpose of reëstablishing an effective operative engagement with any particular jack to actuate the same, this dog, which is pivotally mounted on its tappet, so as to avoid operating the jacks when the carriage is returning, unless means be provided to avoid the difficulty, will dwell in ineffective engaging relation with the particular jack which it should operate, and when the carriage settles to its normal position corresponding to the letter space desired to be written in, the dog would come up between two jacks and not operate the one which it is intended to.

The object of this invention, therefore, is to obviate such a possibility, and insure that the tappet and its dog operate the proper jack at the proper time, even though the carriage is moved in a return direction and settles to its true position corresponding to the denominational order desired and the jack to be operated.

To accomplish this object, in returning the carriage, means is provided whereby the carriage may be given excessive movement beyond the particular letter space or order column in which it is desired to write and compute. From such a position the carriage will settle or advance a distance of not less than one letter space, and preferably a distance materially more than one letter space but less than two letter spaces.

This, then, will insure the dog on the tappet passing by the particular jack which it is intended to operate, and on a settling of the carriage to its true position, operating this jack, so as to effect a denominational selection in the computing mechanism.

This abnormal settling movement of the carriage is effected by modifying the escapement mechanism, so that it will have a play after a return movement of the carriage corresponding to at least one letter space and preferably more.

In a tabulating action when the carriage has jumped forwardly a distance of many letter spaces, it is not desired that the carriage or settling should have this excessive movement as it would disturb the accuracy of the tabulating mechanism, and move the same perhaps a letter space or two beyond

its true position as determined by the tabulating key struck. To obviate such a possibility, an extra dog is provided for the escapement mechanism, which is normally passive or inactive, but as soon as a tabulating key is operated, it will be brought into play, so as to limit the extent of onward or settling movement of the carriage to somewhat less than a letter space, whereby the carriage when released from the tabulating mechanism, will permit the stop on the carriage to advance a sufficient distance to clear the stationary tabulating stop, and yet not so far as would take place when the carriage settles after having been moved in a return direction.

Other features and advantages will appear hereinafter.

In the accompanying drawings—

Figure 1 is a vertical section taken from front to rear, showing diagrammatically the main portions of the combined typewriting and computing mechanism.

Fig. 2 is a vertical section looking from the front, showing the relation of the escapement mechanism to the digit column or denominational selecting mechanism when the latter is moved in an advancing direction, and in the act of operating one of the denominational selecting jacks.

Fig. 3 is a detail view of the escapement mechanism taken from the opposite side to the view shown in Fig. 2.

Fig. 4 is a sectional view taken through the denominational selecting mechanism, showing the relation of the tappet and its dog to the jack after the tappet has been moved in a return direction with the carriage, and before it has settled to its true position. That is to say, the full lines show the dog in an ineffective engaging relation with the jack adjacent the one which it will operate when it settles as the carriage is released to its dotted line position.

Fig. 5 is a similar view to Fig. 4, showing in full lines the tappet in its depressed position when the tabulating mechanism is in play, and in dotted lines in its raised position a sufficient amount in advance to enable the stop carried by the carriage to clear the decimal stop.

Fig. 6 is a detail view of the escapement mechanism, looking at the same from the front, showing the carriage, however, as held in a position corresponding to that of the tappet in Fig. 4 before the carriage is released and ready to settle a distance more than one letter space.

Fig. 7 is a view similar to Fig. 6, showing the parts of the escapement mechanism in the relation which they will occupy during a tabulating movement corresponding to the relative position of the tappet and jacks shown in Fig. 5.

Fig. 8 is a skeleton perspective view, showing the relation of the tappet to the jacks and the parts of the escapement mechanism to each other during a tabulating action, whereby the extent of forward movement of the carriage and tappet is limited.

Referring more particularly to the separate parts of this invention, numeral keys 1 and alphabet keys 2 depress key levers 3, to rock bell cranks 4, so as to swing type bars 5 up rearwardly against the front side of a platen 6, mounted to rotate on a carriage 7, which travels on ways 8. The carriage 7 is normally urged by a spring barrel 9, to travel in an advance direction under the control of an escapement mechanism indicated in general at 10.

This escapement mechanism includes a rack 11 hung on the carriage 7, so that it can move into and out of engagement with a pinion 12. The pinion 12 is controlled in its rotary movement by an escapement wheel 13, mounted on the same shaft 14 therewith. The pinion 12, however, is only held from rotation by the escapement wheel 13 in one direction, and this by means of a pair of pawls 15, which are normally pressed into engagement with the pinion 12 by means of springs 16.

The escapement wheel 13, in turn, is locked against movement in one direction by a fixed pawl 17, and a loose pawl 18. The fixed pawl 17 is mounted on a rocker 19, so as to swing transversely to the plane of the escapement wheel 13, but is fixed against movement in the plane of the escapement wheel 13.

The loose pawl 18, however, is pivotally mounted, at 20, on the rocker 19, and in addition to having a movement transverse to the plane of the escapement wheel 13 with the rocker 19, it has a swinging movement about its pivot 20 in the plane of the escapement wheel 13. This loose pawl determines the extent of movement of the escapement wheel 13, not only in a step-by-step advancing movement of the carriage, but also after the carriage has been returned and settles to its true position. The loose pawl 18 normally tends to assume the position shown in Fig. 6, under the pull of a tension spring 21. The fixed pawl 17 and the loose pawl 18 have their engaging ends slightly staggered from each other or arranged in different planes, so that they will alternately engage the escapement wheel 13.

The oscillating of the rocker 19 is controlled by any of the keys 1 and 2 as they are struck. For this purpose, each of the type bars 5 is provided with a heel 22, which engages a universal bar 23 connected to an oscillating frame 24, which is connected to the rocker 19, and arranged to oscillate the same. That is to say, as any key is struck, the type bar 5 in swinging backwardly will push the universal frame 24 rearwardly

against the tension of a spring 25, so that the loose pawl 18, which is normally in engagement with one of the teeth of the escapement wheel 13, will slip therefrom, at the same time bringing the fixed pawl 17 into engagement with the same tooth.

When the type key is released, the type bar 5 will return to its normal position, permitting the spring 25 to swing the rocker 19 backwardly, carrying the fixed pawl 17 out of engagement with the escapement wheel 13, permitting the escapement wheel to rotate under the drive of the carriage spring 9. The loose pawl 18, however, has in the meantime jumped forwardly under the pull of the spring 21, so that as the fixed pawl escapes from the tooth of the escapement wheel 13, the loose pawl 18 will come into the path of a tooth somewhat in the rear of this tooth, so as to obstruct the movement of the escapement wheel 13, after it has rotated a predetermined amount corresponding to a letter-space movement of the carriage 7. The extent of this movement is determined by the extent of swing of the pawl 18, which, in turn, is determined by an adjustable stop 26.

The movement of the pawl 18 is determined in the opposite direction under the pull of the spring 21, by an adjustable stop 27. That is to say, the loose pawl 18 springs forwardly during the backward movement of the universal frame 24, a distance determined by the stop 27, where it is in position to intercept a tooth of the escapement wheel 13, so that when the universal frame 24 moves forwardly, it will catch this tooth and move back against the tension of the spring 21, with the escapement wheel 13, until it reaches the stop 26, when the escapement wheel 13 and the carriage 7 will be held against further movement, as shown in Fig. 2.

Before going further into details of the escapement mechanism, it will be well to consider the computing mechanism and the relation which the extent of movement of the carriage has to the computing mechanism. The numeral keys 1, in addition to operating the type bars when depressed, carry down with them thrust links 28, which engage arms 29 on shafts 30, so as to rock a corresponding pin-setting linkage 31 of a group of linkages arranged in parallel relation. That is to say, there is one of these pin-setting linkages for each numeral key, which is operated by its accordant numeral key to depress a lower link 32 of the linkage corresponding to the numeral key actuated, so as to tend to set the transverse row of pins 33 lying beneath the same. These pins, however, are normally located out of reach of the links 32, and must be moved up into reach of these links before any pin can be set.

The pins 32 are mounted in series of nine, when the decimal system is used, on denominational bars 34, so as to determine when set, the extent of individual movement of such bars. The bars 34 are provided at their front ends, with racks 35, so as to engage pinions 36 connected to dial wheels 37. These dial wheels exhibit numbers of the different denominational or digit columns, and are rotated by the bars 34 amounts corresponding to the numeral keys struck. That is to say, when a pin 33 is depressed below its fellows, it lies in the path of a cross bar 38 on a general operator 39, which latter, when all of the pins necessary are set up, may be moved forwardly and backwardly to advance and return the denominational bars 34 different amounts according to the pins set. Any suitable means, such as the driving means 40, may be used to reciprocate the general operator 39.

Before, however, the pins 33 can be set on the bars 34, to determine the extent of movement thereof, it is essential to shift them individually from their fellows in accordance with the denominational column being written in on the work sheet, by the particular digit or numeral key 1 being actuated at any specific instant.

For this purpose, the denominational bars 34, when the carriage 7 is in a computing zone, are moved individually and *seriatim* away from their fellows, to enable the pin corresponding to the numeral key actuated, to be set when a denominational column is being written in corresponding to the particular bar moved away from its fellows. To accomplish this, there is provided on the carriage 7, a bar or rod 41, pivotally mounted on which and adjustable therealong, are provided one or more tappets 42, according to the number of computing zones desired for any particular computing head formed by a series of dial wheels 37.

Normally the tappet 42 rests in a depressed position on a supporting rod 43 when not in a computing zone. In this position, the tappet 42 is ineffective. However, when the carriage 7 is advanced to a computing zone, as determined by the position of the tappet 42 thereon, a bearing roller 44 will come into engagement with the cam end of a zone-controlling roller 45, and be moved upwardly with its tappet 42 to the position shown in Fig. 1, in which position a dog 46 will engage individually and *seriatim*, a series of jacks 47, so as to cam them up successively from an inactive position to an active position, as the carriage moves step by step in a letter-feeding or advancing direction. The jacks 47 are loosely mounted intermediate their ends on a rod 48, so that when they are raised at their front ends they will depress individu-

ally the corresponding one of a series of thrust links 49. Each thrust link 49 is connected at its lower end to operate a bell crank 50, which, in turn, is connected to operate the corresponding one of a series of transposition linkages 51. Each linkage 51 is arranged to operate the corresponding one of the series of denominational rack bars 34.

Inasmuch, however, as the carriage 7 moves from right to left with the tappet 42, while the computing proceeds from left to right, the order of operation of the bars 34 will be inverse to that of the order of operation of the jacks 47. That is to say, as the carriage-carried tappet 42 travels in an advancing direction, it will first come into engagement with the jack 47 at the extreme right of the series, but the linkage connection is such that this jack will cause the lifting of the first denominational bar 34 at the extreme left of the series.

When a denominational bar 34 is thus raised, any pin can be set thereon according to which of the numeral keys 1 is actuated at the time that it is raised. Of course as a numeral key is actuated, it operates the carriage-escapement mechanism, and after setting a pin on the bar 34, the numeral key thus enables the carriage 7 to advance, carrying the tappet 42 to the next jack 47, which, in turn, will raise the next denominational bar 34, and so on.

The zone-controlling roller 45 may be normally held in its effective position by a spring 52, which is connected to one of a pair of arms 53, which form with a rock shaft 54, a swinging frame for the zone-controlling roller 45. If, then, the carriage should be moved in a return direction carrying the tappet 42 with it past the series of jacks 47, it would be undesirable to actuate the jacks while so moving, as there would be no need for such actuation.

To avoid such useless rocking of the linkages, and swinging of the denominational bars 34, the dog 46 on each tappet is pivotally mounted as at 55. A straight edge 56 of the dog 46 engaging a shoulder on the tappet 42, prevents any receding or yielding movement of the dog when the tappet is moved in an advancing direction with its cam edge 57 engaging the cam edges 58 of the jacks 47. However, when the carriage is returning, and the tappet is likewise returning therewith, the straight edge 56 comes into engagement with the abrupt surface of the jacks 47, and swings the dog about its pivot 55 against the tension of a spring 59, thereby passing idly along the series of jacks 47.

The jacks 47 are quite closely set together, so as to correspond to letter-space movements of the carriage and the tappet 42. That is to say, the jacks are spaced distances according with the distance between successive digit or denominational columns of the numbers being typewritten. The dog 46 has a considerable pivotal movement as seen in Fig. 4. Because of this, after a return movement within the range of the jacks 47, unless means be provided to avoid the difficulty, the dog 46 would dwell in an ineffective engaging relation with the jack which it is to operate and partly right itself in a position in advance thereof when the carriage and the tappet settled to their true letter-space positions. Under such circumstances, the dog 46 would be located between two of the jacks 47, and not with its cam surface engaging and forcing up the jack 47 corresponding to the letter-space position of the carriage. This difficulty might be overcome by returning the carriage and the tappet an extra letter-space, and then advancing the same by use of the space bar. This would require extra thought and manipulation on the part of the operative.

In order to take care of such a contingency automatically, provision is made for an abnormal settling movement of the carriage and the tappet 42, whereby when the carriage and tappet stop in any given letter space or digit column after a returning movement, the jack corresponding to that digit column will be assuredly operated. This excessive settling movement of the carriage, and through the carriage of the tappet, is obtained from the escapement mechanism.

For this purpose, the loose pawl 18 is given a slightly larger leave than it would normally have, by cutting away a portion of the stop 27 to such an extent that the pawl 18 will be just drawn in by its spring 21 when the universal frame 24 returns to its normal position after a letter-spacing movement, to engagement with the succeeding tooth on the escapement wheel 13. Further, the lost motion is obtained by cutting away the loose pawl 18 at 60, which enables the backing up of the escapement wheel a greater amount than usual, and until the loose pawl 18 banks up against the stop 27, when the pawls 15 will yield, permitting the rotation of the pinon 12 without a corresponding rotation of the escapement wheel 13. That is to say, if we return the carriage in the direction of the arrow in Fig. 6, so as to bring the tappet 42 back a certain distance in a computing zone, the escapement wheel 13, which is normally in engagement with the loose pawl 18, will be rotated in the direction of the arrow in Fig. 6, until the loose pawl 18 banks up against the stop 27, and the tooth in advance of the tooth which was in engage-

ment with the opposite side of the loose pawl 18, is stopped by the hard contact with the cut-out portion 60 of the loose pawl. Then the pinion 12 will rotate idly, the friction between this pinion and the escapement wheel 13 being overcome.

It will be evident, by reference to Fig. 6, that when the carriage is released by the person returning the same, it will have a settling movement equal to the distance of the next tooth 61 (Fig. 6) of the escapement wheel 13 from the loose pawl 18, plus the receding swing of this pawl against the tension of the spring 21. This is considerably greater than the space between two teeth, as the tooth 16 must first come into engagement with the pawl 18, and is then permitted to have a full sweep almost equal to a letter space.

The effect of this excessive settling movement will be evident by reference to Fig. 4, in which the tappet is shown to be moving in a return direction. Now the letter space or digit column which it is desired to stop in at the end of such return movement corresponds to the jack indicated in Fig. 4 at 62. It will be seen, however, that the dog 46 has not only surely passed the jack 62, but is also in ineffective engaging relation with the succeeding jack 63. Now, then, the tappet 42, when the carriage is released, will settle with the same a distance somewhat greater than the distance between two digit columns, and correspondingly greater than the distance between the two succeeding jacks 62 and 63, so that the dog 46 on the tappet will not only have space in which to resume an upright or erect position, but will also have movement enough to cam up the jack 62, as shown in dotted lines in Fig. 4.

There may occur cases where it is not desired to have this excessive spacing movement, as when tabulating. To tabulate, that is, to jump the carriage with its tappet 42 a number of letter spaces at a time, to bring any desired zone or column to the printing point, one of a series of keys 64 is struck, so as to depress the front end of a key lever 65, thereby raising the rear end thereof, so as to elevate one of a series of decimal stops 66. Each of the decimal stops is provided with a shoulder 67, so as to rock a universal frame 68 common thereto, which, in turn, rocks a shaft 69 to pull on a link 70. The link 70 is connected to rock a swinging frame 71, which bears at its front end, a roller 72 underlying the rack bar 11. This enables the disconnection of the rack bar 11 from the pinion 12 whenever any one of the tabulating keys 64 is struck. The carriage then may move under the traction of the spring barrel 9 until its movement is obstructed. To obstruct the movement of the carriage, the particular elevated decimal stop 66 will come into the path of a carriage stop 73 adjustably mounted on a rack bar 74 carried by the carriage 7.

It is desired, however, that when the particular tabulating key 64 is released, the carriage stop 73 shall escape sufficiently past the just operated decimal stop 66, so that in case the same or another tabulating key is actuated, the carriage stop 73 will be clear of this decimal stop 66, and permit a correct subsequent forward movement of the carriage.

It is, however, desirable that this settling movement of the carriage in tabulating, shall not be too great, as it might disturb the proper selection of the particular digit column corresponding to the particular tabulating key 64 operated. Means is therefore provided whenever a tabulating key is operated, to limit the settling movement of the carriage and the tappet 42 carried thereby to the proper amount, somewhat less than that arranged for when the carriage and the tappet 42 settle from a return movement thereof.

To do this, there is provided on the rock shaft 69, a shifter 75, which swings every time the rock shaft 69 is oscillated, and thus every time a tabulating key 64 is actuated. The forward movement of this shifter 75 brings a cam surface 76 thereon into engagement with a pawl or dog 77 pivotally carried by the rocker 19, so as to bring this dog, which is normally held in a passive position by a spring 78, into the path of one of the teeth of the escapement wheel 13 at the back side thereof.

As has been stated above, when a tabulating key 64 is depressed, the rack 11 is lifted out of engagement with the pinion 12, so that the tension of the carriage spring is taken off from the escapement wheel 13. This then permits the spring 21 to act, causing its pawl to tend to carry forwardly the escapement wheel 13, as far as the pawl 18 can swing. The dog 77, however, is in the same plane as the loose pawl 18, and at the striking of a tabulating key is moved by the shifter 75 into the path of one of the teeth on the escapement wheel 13, so that it intercepts this tooth, and thus prevents a further movement of the escapement wheel 13 before the pawl 18 has swung its full possible movement. That is to say, the parts will assume a position such as that shown in Fig. 7, in which the escapement wheel 13 has moved back the loose pawl 18 a sufficient distance to cause a settling movement of the carriage, when the tabulating key is released, which will bring the particular carriage stop 73 in action past the tabulating stop 66 in action, and yet not so great a movement as would occur from a settling of

the carriage after a return movement. This assures the accurate selection by the tabulating mechanism of any particular letter space or digit column.

The tappet 42 is permitted to drop out of action when a tabulating key is struck, so as to prevent the engagement of the dog 46 with the series of jacks 47 during such a rapid movement. For this purpose, the shaft 54 carrying the zone-controlling roller 45 and its frame, is provided with an arm 79, which is connected by a link 80 to an arm 81 secured on the rock shaft 69.

It will thus be evident, inasmuch as the rock shaft is oscillated every time a tabulating key 64 is struck, that the zone-controlling roller 45 will be moved against the tension of the spring 52, to the position indicated in Fig. 8, corresponding to the ineffective position of the tappet 42. When the tabulating key is released, the spring 52 will act to return the zone-controlling roller 45 to its normal position, whereby if any tappet 42 happens to be in a computing zone, it will be raised to cam up the jack directly above it, corresponding to the digit column selected by the tabulating mechanism.

It is therefore evident that means is provided whereby the denominational selecting tappet 42 may be given step-by-step movements in an advance direction of a degree corresponding to the difference between individual denominational or digit columns, and corresponding also to the distance between the jacks 47, whereby these jacks may be operated *seriatim*.

It is further evident that during a return movement of the demoninational selecting tappet 42, it is given an excessive movement of greater magnitude than the distance between two digit columns and between two successive jacks 47, so that the dog 46 will be certainly drawn to a position free and clear of the jack which it is intended to operate, and, in fact, will be brought into ineffective engagement with the next jack, whereby when the tappet settles to its true position, the proper jack is actuated.

It is still further evident that this excessive movement is minimized when a tabulating action takes place, so that while the tappet may settle a certain amount to clear the coöperating stops of the tabulating mechanism, it will not settle so great a distance but what the dog 46 will operate the proper jack 47 selected by the tabulating mechanism.

Variations may be resorted to within the scope of the invention, and portions of the improvements may be used without others.

Having thus described my invention, I claim:

1. The combination with a computing mechanism, of denominational selecting mechanism for said computing mechanism including a series of jacks and a tappet arranged to come *seriatim* in an advance movement into engagement with said jacks, so as to engage said jacks individually, said jacks being spaced apart distances corresponding to the step-by-step movement of said tappet, and means for giving said tappet a settling movement greater than the distance between two jacks after a movement of said tappet in a return direction.

2. In a computing machine, in combination, denominational selecting mechanism comprising a selecting member and a plurality of spaced denominational members to be individually selected and operated thereby, and means for normally effecting a relative step-by-step advancing movement between said members, so as to bring said selecting member into coöperative engaging relation with said denominational members one after another, the relation of said selecting member to said denominational members being such as to render the same effective on advancing movement only, the change of position at each normal step of advancing movement being equal to the distance between two denominational members, said movement-effecting means including an excessive-lost-motion couple, so as to render said means capable of permitting said selecting member and one of said denominational members to be brought to a relative position in coöperative engagement, by an advance settling movement of one relatively to the other, after a return movement such as to displace said selecting member from said relative position to an extent greater than the distance between two denominational members, thus affording means for reëstablishing a coöperative relation between said selecting member and a denominational member, after having been once caused to pass each other by said normal advancing movement, by first imparting a return movement, such as to cause said selecting member and said denominational member to be returned past each other to a position free from mutual engagement, and then permitting them to be brought to their coöperative engaging relation by said advance settling movement.

3. In a computing machine, in combination, denominational selecting mechanism comprising a selecting member and a plurality of spaced denominational members to be individually selected and operated thereby, and means for normally imparting a step-by-step advancing movement to said selecting member to bring the same into coöperative engaging relation with said denominational members one after another, the relation of said selecting member to said denominational members being such as to render the same effective on advancing

movement only, the movement of said selecting member at each normal step of advancement being equal to the distance between two denominational members, said movement-effecting means comprising an escapement mechanism including an excessive-lost-motion couple, so as to render said means capable of permitting said selecting member to be brought to a position of rest in coöperative engagement with one of said denominational members, by an advance settling movement, after a return movement such as to carry said selecting member beyond said position of rest a distance greater than that between two denominational members, thus affording means for reëstablishing a coöperative relation between said selecting member and a denominational member, after having been once caused to pass the same by said normal advancing movement, by first imparting to said selecting member a return movement sufficient to carry it past said member and free from mutual engagement therewith, and by then permitting it to be brought to its coöperative engaging relation with said denominational member by said advance settling movement.

4. In a computing machine, in combination, denominational-selecting mechanism comprising a selecting member and a plurality of spaced denominational members to be individually selected and operated thereby, and means for normally imparting a step-by-step advancing movement to said selecting member to bring the same into coöperative engaging relation with said denominational members one after another, said selecting member being capable of yielding, on engagement with a denominational member resulting from a return movement, so as to render the same effective on advancing movement only, the movement of said selecting member at each normal step of advancement being equal to the distance between two denominational members, said movement-effecting means including an excessive-lost-motion couple, so as to render said means capable of permitting said selecting member to be brought to a position of rest in coöperative engagement with one of said denominational members, by an advance settling movement, after a return movement such as to carry said selecting member beyond said position of rest a distance greater than that between two denominational members, thus affording means for reëstablishing a coöperative relation between said selecting member and a denominational member, after having been once caused to pass the same by said normal advancing movement, by first imparting to said selecting member a return movement sufficient to carry it past said member and free from mutual engagement therewith, and by then permitting it to be brought to its coöperative engaging relation with said member by said advance settling movement.

5. The combination with a computing mechanism, of denominational selecting mechanism for said computing mechanism including a series of jacks, a tappet arranged to come *seriatim* into engagement with each of said jacks, said tappet having a normal advancing movement corresponding to the distance between two successive jacks, and compensating means for increasing from a normal space movement, the advancing movement of said tappet when settling from a return movement.

6. The combination with a computing mechanism, of a series of denominational members connected to control the denominational selecting for said computing mechanism, a tappet arranged to come *seriatim* into register with each of said denominational members, and an escapement mechanism for said tappet controlling a step-by-step advancing movement of said tappet corresponding to the distance of one denominational member to another, and a settling movement, culminating from a return movement, of greater distance than that between two denominational members, so that said tappet will operate a denominational member in advance of the extreme return position of said tappet.

7. The combination with a computing mechanism, of a series of denominational members connected to control the denominational selecting for said computing mechanism, a tappet arranged to come *seriatim* into register with each of said denominational members, an escapement mechanism for said tappet controlling a step-by-step advancing movement of said tappet corresponding to the distance of one denominational member to another, and a settling movement, culminating from a return movement, of greater distance than that between two denominational members, so that said tappet will operate a denominational member in advance of the extreme return position of said tappet, tabulating mechanism for jumping said tappet a distance corresponding to a multiple of said step-by-step movements, and limiting means for preventing a settling movement of said tappet, after an actuation of said tabulating mechanism, greater than the distance between two denominational members.

8. The combination with a computing mechanism, of denominational selecting mechanism for said computing mechanism including a series of jacks, a tappet arranged to come *seriatim* into engagement with each of said jacks, said tappet having a normal advancing movement correspond-

ing to the distance between two successive jacks, compensating settling means for increasing from a normal space movement, the advancing movement of said tappet when settling from a return movement, and means for minimizing the settling movement of said tappet to less than the distance between two successive jacks when settling from a movement other than a normal advancing step-by-step movement and a return movement.

9. The combination with a computing mechanism, of a series of denominational members connected to control the denominational selection of said computing mechanism, a tappet having a step-by-step movement in an advancing direction, so as to come *seriatim* into register with each of said denominational members, compensating means for enabling a settling movement of said tappet in excess of its normal step-by-step movement, and in excess of the distance between two successive denominational members, and limiting means for restricting the advancing movement of said tappet when settling from a movement other than a normal advancing step-by-step movement, and from any other than a return movement, to a distance less than its normal step-by-step advancing movement and considerably less than its settling movement from a return movement.

10. The combination with a computing mechanism, of a series of spaced denominational members connected to control the denominational selection of said computing mechanism, a tappet arranged to come *seriatim* into register with each of said denominational members, an escapement mechanism for controlling step-by-step movements of said tappet to bring the same successively into register with said denominational members, said escapement mechanism being arranged to give a settling movement of said tappet somewhat greater than the distance between two successive denominational members, so as to insure after a return movement of said tappet while in a computing zone, the proper registering of said tappet with the denominational member corresponding to the settled position of said tappet, tabulating mechanism for jumping said tappet a distance corresponding to a multiple of the distances between two successive denominational members, and tabulating actuated means coming into play with the actuation of said tabulating mechanism for modifying the movement of said escapement mechanism when tabulating.

11. The combination with a computing mechanism, of a series of spaced denominational members connected to control the denominational selecting of said computing mechanism, a tappet arranged to come *seriatim* into register with each of said denominational members, an escapement mechanism for controlling step-by-step advancing movements of said tappet, said escapement mechanism being arranged to allow an excessive settling movement from a return movement of said tappet, tabulating mechanism for jumping said tappet a distance corresponding to a multiple of the space between two successive denominational members, silencing means for rendering said tappet ineffective during a tabulating action and enabling said tappet to become effective at the completion of a tabulating action, and means for modifying the action of said escapement mechanism during a tabulating operation to bring the tappet into exact register with the denominational member selected, so that when said tappet is rendered effective after a tabulating action, said tappet will come into engagement with the denominational member selected by the tabulating mechanism.

12. The combination with a computing mechanism, of a series of spaced jacks connected to control the denominational selecting of said computing mechanism, a tappet, a dog pivotally mounted on said tappet and held from depression when said tappet is moved in an advancing direction, so that said dog will operate said jacks successively, a spring yieldingly holding said dog to permit a swinging movement of said dog relatively to said tappet when said tappet moves in a return direction, so as to enable said dog to escape idly past said jacks without operating the same, and an escapement mechanism for controlling the advancing movement of said tappet step by step amounts corresponding to the spaces between said jacks, and arranged to give a settling movement of said tappet at the end of a return movement thereof greater than the distance between two successive jacks, so that said dog may swing past and escape the jack which it is to operate, and come on the settling of said tappet into engagement with said jack in an advancing direction.

13. The combination with a computing mechanism, of a series of jacks connected to control the denominational selecting of said computing mechanism, a tappet, a dog pivotally mounted on said tappet and limited in its movement in one direction, so as to operate said jacks *seriatim*, when said tappet is moving in an advancing direction, a spring yieldingly holding said dog against movement in the opposite direction to permit said dog to trip idly by said jacks, and an escapement mechanism enabling said dog to assume an erect position at the end of a return movement beyond and free and clear of the jack which it is to actuate before settling to actuate said jack.

14. The combination with a computing mechanism, of a series of jacks connected to

control the denominational selecting of said computing mechanism, a traveling carriage, a tappet carried by said carriage and arranged to operate said jack *seriatim*, an escapement mechanism for controlling the step-by-step advancing movements of said carriage and thus of said tappet, said escapement mechanism being arranged to give an excessive settling movement greater than the distance between two successive jacks after a return movement of said carriage, a tabulating mechanism for jumping said carriage a distance corresponding to a multiple of the space between two successive jacks, a special dog for said escapement mechanism, and a shifter operated by said tabulating mechanism for bringing said dog into play to limit the movement of said escapement mechanism when tabulating, and thus limit the settling movement of said carriage and said tappet, whereby the jack selected by said tabulating mechanism will be operated by said tappet.

15. In a computing machine, the combination with a denominational selecting mechanism including parts having a relative movement, of means for effecting relative step-by-step advancing movements of one magnitude between said parts, to bring said parts to predetermined relative positions of rest, said movement-effecting means including an excessive-lost-motion connection to render the same effective as a means for causing an advancing movement to any normal position of rest after a return movement of a magnitude greater than one step and less than two steps beyond said position.

16. In a computing machine, the combination with a denominational selecting mechanism including parts having a relative movement, of means for effecting relative step-by-step advancing movements of one magnitude between said parts, to bring said parts to predetermined relative positions of rest, said movement-effecting means including an excessive-lost-motion connection to render the same effective as a means for causing an advancing movement to any normal position of rest after a return movement of a magnitude greater than one step and less than two steps beyond said position, and tabulating mechanism having means to limit the extent of relative advancing movement between said parts after an action thereof which it controls.

17. In a computing machine, the combination with a denominational selecting mechanism including a series of jacks and a tappet for contacting with said jacks *seriatim* to effect denominational selections, of means for effecting a regular step-by-step advancing movement of said tappet corresponding to the spacing of said jacks, said movement-effecting means including an excessive-lost-motion connection rendering the same effective as means for positively clearing said tappet from a jack which it has just operated, on a return movement of said tappet, so that said tappet may correctly actuate said jack on a subsequent advancing movement.

18. The combination with a series of denomination-selecting jacks, of a tappet engaging said jacks to effect denominational selections, means for electively causing said tappet and said jacks to be brought into engaging relation or to be maintained in a disengaging relation, and traversing means for said tappet having different settling movements dependent on whether said tappet is in engaging or in disengaging relation with respect to said jacks.

RICHARD M. BECKER.

Witnesses:
W. O. WESTPHAL,
JULIUS DUCKSTINE.