J. A. WHITE.

PAPER SLITTING AND WINDING MACHINE.

APPLICATION FILED FEB. 6, 1911.

1,063,093.

Patented May 27, 1913.

3 SHEETS—SHEET 1.

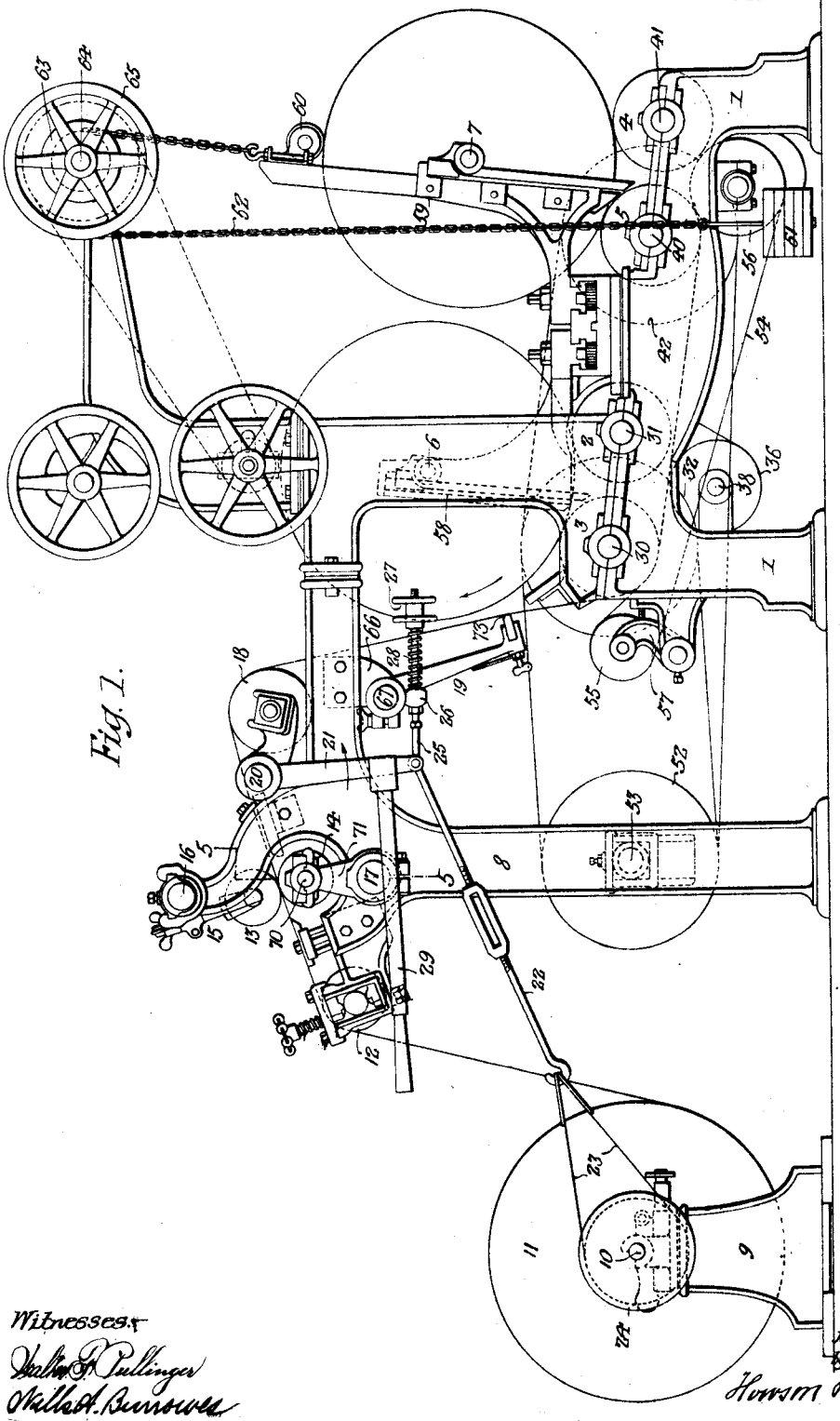

Fig. 1.

Witnesses:-

Walter F. Pullinger

Nellie A. Burrowes

Inventor:-

Joseph A. White

by his Attorneys

Howson & Howson

J. A. WHITE.

PAPER SLITTING AND WINDING MACHINE.

APPLICATION FILED FEB. 6, 1911.

1,063,093. Patented May 27, 1913.

3 SHEETS—SHEET 2.

Fig. 2

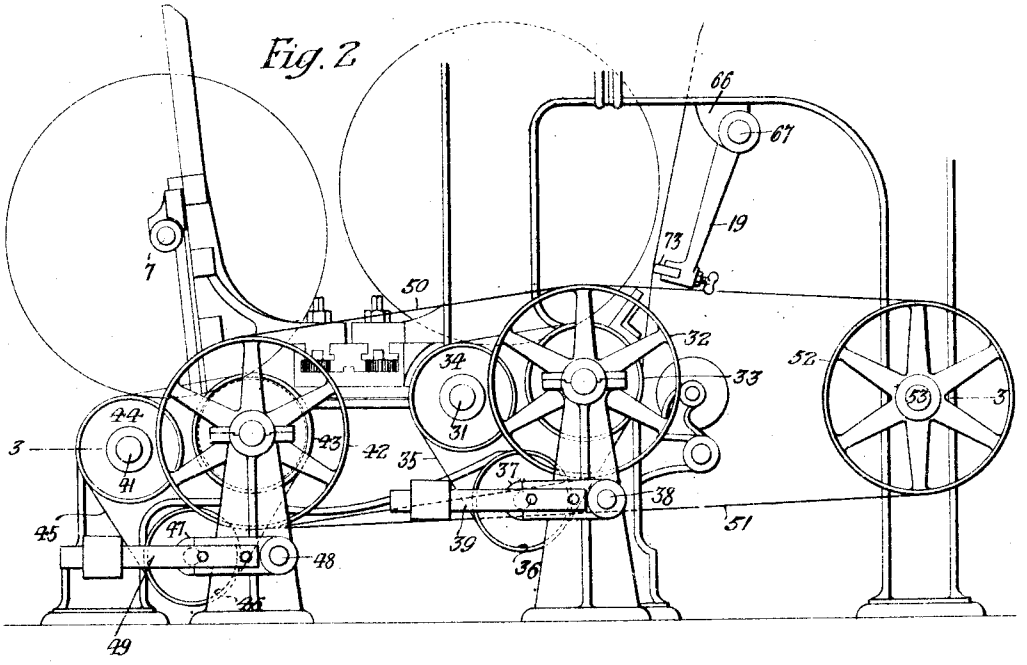

Fig. 4.

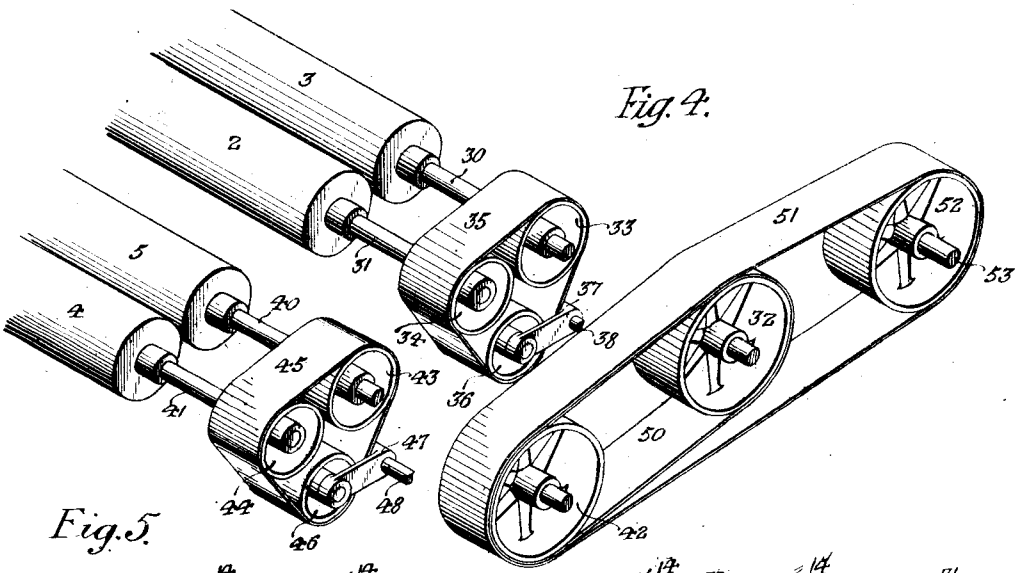

Fig. 5.

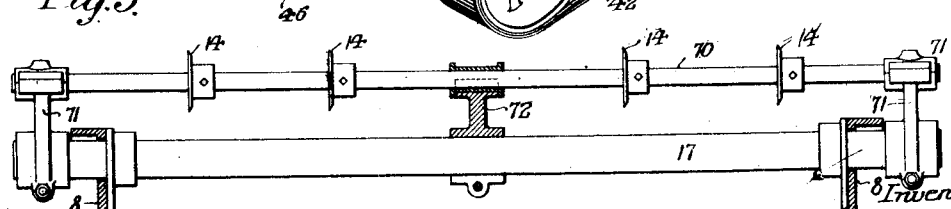

Witnesses:—
Walter F. Pullinger
Wills A. Burrowes

Inventor:—
Joseph A. White.
by his Attorneys.—
Howson & Howson

J. A. WHITE.

PAPER SLITTING AND WINDING MACHINE.

APPLICATION FILED FEB. 6, 1911.

1,063,093.

Patented May 27, 1913.

3 SHEETS—SHEET 3.

Fig. 3.

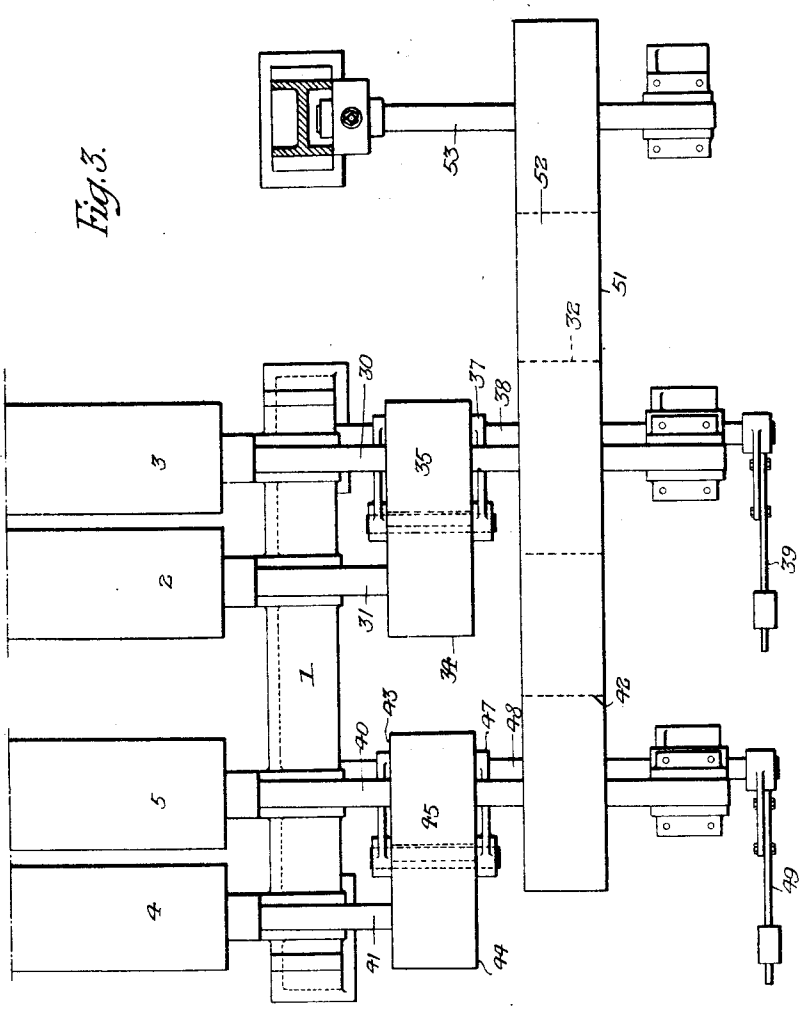

Witnesses.—
Wm. L. Ellinger
Wills A. Burrowes

Inventor.—
Joseph A. White.
by his Attorneys.—
Howson & Howson

UNITED STATES PATENT OFFICE.

JOSEPH ATWOOD WHITE, OF PHILADELPHIA, PENNSYLVANIA, ASSIGNOR TO THE MOORE AND WHITE COMPANY, OF PHILADELPHIA, PENNSYLVANIA, A CORPORATION OF PENNSYLVANIA.

PAPER SLITTING AND WINDING MACHINE.

1,063,093. Specification of Letters Patent. Patented May 27, 1913.

Application filed February 6, 1911. Serial No. 606,808.

To all whom it may concern:

Be it known that I, JOSEPH A. WHITE, a citizen of the United States, residing in Philadelphia, Pennsylvania, have invented certain Improvements in Paper Slitting and Winding Machines, of which the following is a specification.

My invention relates to certain improvements in machines for slitting and winding paper, and particularly in machines where the paper is taken from a roll.

One object of the invention is to prevent the tearing of the independent sheets as they are wound by allowing the driving mechanism of the main supporting roll to slip.

A further object of the invention is to provide means for automatically placing tension upon and releasing the roll from which the paper is taken as it is led through the slitting section of the machine, and the invention relates also to the construction of the slitting mechanism.

In the accompanying drawings:—Figure 1, is a side view of a combined slitting and winding machine, illustrating my invention; Fig. 2, is a view of the opposite side of the machine from that illustrated in Fig. 1; Fig. 3, is a plan view of one side of the machine; Fig. 4, is a perspective view, showing the driving mechanism in detail, and Fig. 5, is a sectional view on the line 5—5 Fig. 1.

1 is the frame of a paper winding machine having two sets of winding rolls 2 and 3, and 4 and 5.

6 and 7 are spindles upon which the rolls of paper are wound.

8 is an extension of the main frame, carrying the mechanism by which the paper is slit into strips of any width desired.

9 is a bearing upon which the spindle 10 is mounted, carrying the roll of paper 11, which is to be slit and wound upon either of the spindles 6 or 7 or both.

The paper passes from the roll 11 over a guide roll 12, which is adjustable in the frame 8 and between the slitting knives 13 and 14. The slitting knives 13 are adjustable longitudinally as well as vertically and are carried by brackets 15 mounted on the transverse bar 16. The lower slitter knives 14 are laterally adjustable on the shaft 70 by any suitable means, and in this instance I have shown a hub on each slitter knife provided with a set screw, Fig. 5. The shaft 70 is carried by three bearings 71, 71, and 72 mounted on a heavy bar 17 extending from one frame to the other and adapted to supports on the frame. The center bearing for the slitter can be moved longitudinally to a limited extent, and the end bearings can be entirely removed when it is desired to take any of the slitter knives off of the shaft. The frame is so designed that there will be a sufficient opening in line with the slitter knives so that they can be taken off without removing the shaft. By this construction either end bearing can be removed yet the slitter shaft will always be held in alinement by the other end bearing and intermediate bearing.

By supporting the slitter shaft on a heavy transverse bar, it can be made much lighter than heretofore and the spring of the shaft is avoided by the use of the central bearing. Furthermore, the heavy bar aids materially in stiffening the entire machine. It will be understood that the lower slitter shaft 70 may be driven by any suitable mechanism.

The paper, as it is slit, passes around a guide roll 18 to the first roll 3 and between the roll 18 and the roll 3 the strips of paper are spread by a device 19 shown in Fig. 1, and fully set forth and claimed in an application for patent filed by me on June 30, 1910, under Serial Number 569,710, so that when the sheets of paper are rolled upon a single spindle, the several rolls will not inter-lap but will be entirely independent, one of the other, and will be arranged close together.

In order that the paper will always be taut as it passes through the slitting section of the machine, I provide an automatic friction for the spindle 10 of the roll 11 consisting of the following elements:—The bearing arms for the roll 18 are carried by a shaft 20 mounted in bearings in the front frame and at one end of this shaft is an arm 21 connected by a longitudinally adjustable rod 22 to a strap 23, which passes around a wheel 24. The rod is hooked to engage eyes in the end of the strap, as clearly shown in Fig. 1. Pivoted to the end of the arm 21 is a rod 25, which passes through an opening in a lug 26 carried by a fixed portion of

the machine. Between a nut 27 and this lug is a spring 28, which tends to move the arm in the direction of the arrow, Fig. 1, and thus tighten the friction strap or band on the band wheel 24. Projecting from the arm 21 toward the rear of the machine, is a hand lever 29, by which the operator can immediately release or apply friction to the wheel 24 or disconnect the brake strap 23 when desired. If the paper becomes slack as it passes over the guide roll 18 the spring immediately places additional tension on the wheel 24, but if the paper binds upon the roll 18, it will overcome the pressure of the spring 28 and reduce the friction on the wheel 24, consequently, allowing the paper to more freely unwind from the roll. This mechanism is entirely automatic so that the paper passes through the slitter and to the winder with the proper amount of tension.

When paper is re-rolled, especially in narrow strips, it is liable to break, due to the weight of the roll as it increases in size and one object of my invention is to provide against this breaking of the paper as it is rolled by allowing the driving mechanism to slip. In the present instance the spindle 30 of the roll 3 is of greater length than the spindle 31 of the roll 2 and mounted on the outer end of this spindle, is a belt pulley 32, which receives the driving belt for one pair of rolls and between this driving pulley and the frame is a belt pulley 33 and on the spindle 31 is a belt pulley 34. A belt 35 passes around these two pulleys and around a weighted idler 36 mounted on an arm 37 of a rock shaft 38 and on this rock shaft is a weighted arm 39. On adjusting the weight of this arm more or less pressure can be applied to the belt 35 so that by regulating the pressure the roll 2 is allowed to slip more or less, according to the quantity of paper being rolled. It will be noticed in Figs. 1 and 2 that the major portion of the weight of the roll of paper is carried by the winding roll 2 and the roll 3 simply acts as a means for holding the roll of paper in position; taking only a portion of the weight. The winding is done by the roll 2 so that if the driving mechanism of this roll 2 is allowed to slip when the weight of the roll is increased, the paper cannot be brought to a point where it will be torn, as the driving mechanism will yield before tearing the paper, consequently, if the roll is allowed to slip, the paper being fed continuously to the roll of paper being wound, the tension will be immediately released and the paper will be wound upon the roll without excessive tightness.

The rolls 4 and 5 have the same driving mechanism as the rolls 2 and 3. The spindle 40 of the roll 5 is longer than the spindle 41 of the roll 4 and has at its end a belt pulley 42 and an intermediate belt pulley 43 and on the spindle 41 is a belt pulley 44 and the belt 45 passes around these two pulleys and around the idler 46, which is mounted on arms 47, secured to a rock shaft 48 having a weighted arm 49 and the roll 4 takes the major portion of the weight of the roll of paper in the same manner as the roll 2. A belt 50 passes around the two pulleys 42 and 32 and a main driving belt 51 passes from the pulley 52 on the main driving shaft 53 and around the belt pulley 42; the belt pulley 32 being mounted between the two runs of the belt. This means of driving from the main shaft is common in this type of winders.

The paper is guided onto the rolls 3 and 5 by means of an endless belt 54, which passes around the rollers 55 and 56. The roll of paper, as it comes from the slitter section passes between this belt 54 and the roll 3, and that portion of the paper which is to be wound on the first spindle 6 is carried up around the roll 3 and on to the spindle, while the other strips of paper are carried by the endless belt 54 on and around the roll 5 to the spindle 7. The roller 55 is carried by an adjustable bearing 57 so as to take up the slack in the belt 54.

58 and 59 are guides for the spindles 6 and 7 respectively, and these guides are bolted to the main frame of the machine in the ordinary manner.

A pressure roll such as illustrated at 60 may be located so as to rest upon the periphery of a series of rolls of paper when wound upon a single winding spindle. The weight of the roll may be regulated by an adjustable weight 61 connected by a chain 62 secured to a sheave 65 on a shaft 64, sheaves 63 are mounted on this shaft and are connected by chains to each end of the frame carrying the roll 60. By the use of the roll 60 all the rolls of paper on said spindle 7 are driven uniformly and retain the same diameter.

It will be noticed that the rolls 2 and 4 are the main supporting rolls for the paper, as it is wound upon the spindles 6 and 7 respectively, as the roll is mounted nearer a vertical line drawn through the center of the spindles than the rolls 3 and 5. Consequently the major portion of the weight is taken by these rolls.

The operation is as follows: The roll of paper to be slit and wound is mounted on the spindle 10 and the end is passed over the guide roll 12 and between the slitting knives 13 and 14 and around the guide roll 18 and the slit ends are then directed to their respective spindles 6 and 7 in the manner described above. As motion is imparted to the mechanism the paper is slit in the desired number of sections and it is then separated by the device 19 and if the paper is to be wrapped on one roll then the strips are guided either to the spindle 6 or to the

spindle 7, or, if they are to be divided, then some of the strips may be wound on the spindle 6 and others on the spindle 7. As the paper is fed from the slitting section onto the winding section, tension is automatically regulated so that there is an even tension on the paper throughout the slitting and winding process. As the rolls of paper increase in size and there is a tendency to strain the paper as it is being wound on the spindles 6 and 7, the weights on the arms 39 and 49 are so adjusted that there will still be the proper amount of driving friction to turn the rolls 2 and 4 so that in the event of extra strain on the paper the belts 35 and 45 will slip on the pulleys 34 and 44 respectively, and as soon as the strain on the paper is reduced motion will be again imparted to the rollers. Thus there is no likelihood of the paper being torn during the winding process.

I claim:—

1. The combination in a winding machine, of two rolls spaced apart, one roll acting as the main supporting roll, the other acting as the guiding roll for the roll of paper as it is wound, means for guiding the roll, and separate driving means for driving the supporting roll, so that the supporting roll will slip when extra pressure is applied.

2. The combination in a winding machine, of two rolls spaced apart, one roll acting as the main supporting roll, the other acting as the guiding roll for the roll of paper as it is wound, means for positively driving the guiding roll, and an endless belt for driving the supporting roll from the guiding roll, with means for allowing the belt to slip when increased weight is carried by the supporting roll, to prevent the paper tearing as it is wound.

3. The combination in a machine for winding paper, of two rolls, a spindle, a guide for the spindle on which the paper is to be rolled, one of said rolls being nearer a vertical line drawn through the spindle than the other roll and acting as the main supporting roll, means for driving the other roll, a belt wheel on the spindle of each of said rolls, a belt passing around said belt wheel, an idler wheel in the loop of the belt, an adjustable weight for placing tension on the belt so that when the draft of paper as it is wound upon the roll becomes too great for its tensile strength, the belt will slip, causing a momentary stoppage of the rotation of the supporting roll.

4. The combination of two sets of rolls, a spindle mounted above each pair of rolls, guides for the spindles, one of said rolls of each pair being nearer the vertical center line of its spindle than the other roll so that it carries a greater proportion of the weight of the paper as it is rolled upon the spindles, the other rolls acting as guide rolls for the paper, a belt pulley on the spindle of each guide roll, a driving shaft, a belt pulley on the driving shaft, a belt passing around the two belt pulleys of the guide rolls, and a belt passing over the first mentioned belt and around the driving pulley, a second pulley on the spindle of each guide roll and a pulley on the spindle of each supporting roll, belts passing around the two sets of pulleys, a weighted idler mounted on the loop of each belt so as to allow the said belts to slip when extra weight is applied to the said supporting rolls.

5. The combination in a combined slitting and winding machine for paper, of a support for the roll to be unwound, guides for the paper, slitters, and means for rolling the slit paper, with a yielding guide roll and friction mechanism for the roll of paper to be unwound controlled by the said yielding guide roll.

6. The combination in a combined slitting and winding machine for paper, of a spindle upon which the paper is mounted to be unrolled, a series of guide rolls, slitters for slitting the paper into longitudinal lengths, rolls for winding the paper on the spindle, a rock shaft, bearings on the rock shaft for one of said guide rolls, an arm on the rock shaft, a friction wheel on the spindle of the roll of paper to be unwound, a friction band extending around the wheel and connected to said arm, with a spring tending to tighten the band on the friction wheel, the pressure of the paper on the roll opposing the action of the spring.

7. The combination in a combined slitting and winding machine for paper, of a spindle, a friction wheel on the spindle, a series of guide rolls for the paper, a rock shaft, bearings on the rock shaft for one of said guide rolls, an arm on the rock shaft, a friction band passing around the wheel and connected to the said arm, a rod extending through a fixed lug, a nut on the rod, and a spring mounted between the lug and the nut so that when the said yielding roll is drawn down by the tension of the paper, it will cause the spring to yield and reduce the friction of the band upon the friction wheel and when the paper is slack the spring will increase the friction of the band upon the wheel so that the paper will be fed to the winding mechanism always under the same tension.

8. The combination in a paper slitting machine, of a frame, a carrying beam mounted in the frame and extending beyond each side thereof, detachable bearings on the beam beyond the frame, a slitter shaft mounted in the bearings; and slitter knives adjustably mounted on the shaft.

9. The combination in a paper slitting machine, of a frame, a carrying beam mounted in the frame and extending beyond the

sides thereof, bearings mounted on the end of said beam beyond the frame, a center bearing longitudinally adjustable on the beam, a slitter shaft mounted in the three bearings, and slitter knives adjustably mounted on the slitter shaft.

In testimony whereof, I have signed my name to this specification, in the presence of two subscribing witnesses.

JOSEPH ATWOOD WHITE.

Witnesses:
WM. E. SHUPE,
W[illegible] A. BARR.