May 28, 1935. R. C. SHAND 2,002,757

LIQUID DISPENSING SYSTEM

Filed Aug. 28, 1933 2 Sheets-Sheet 1

FIG. 1

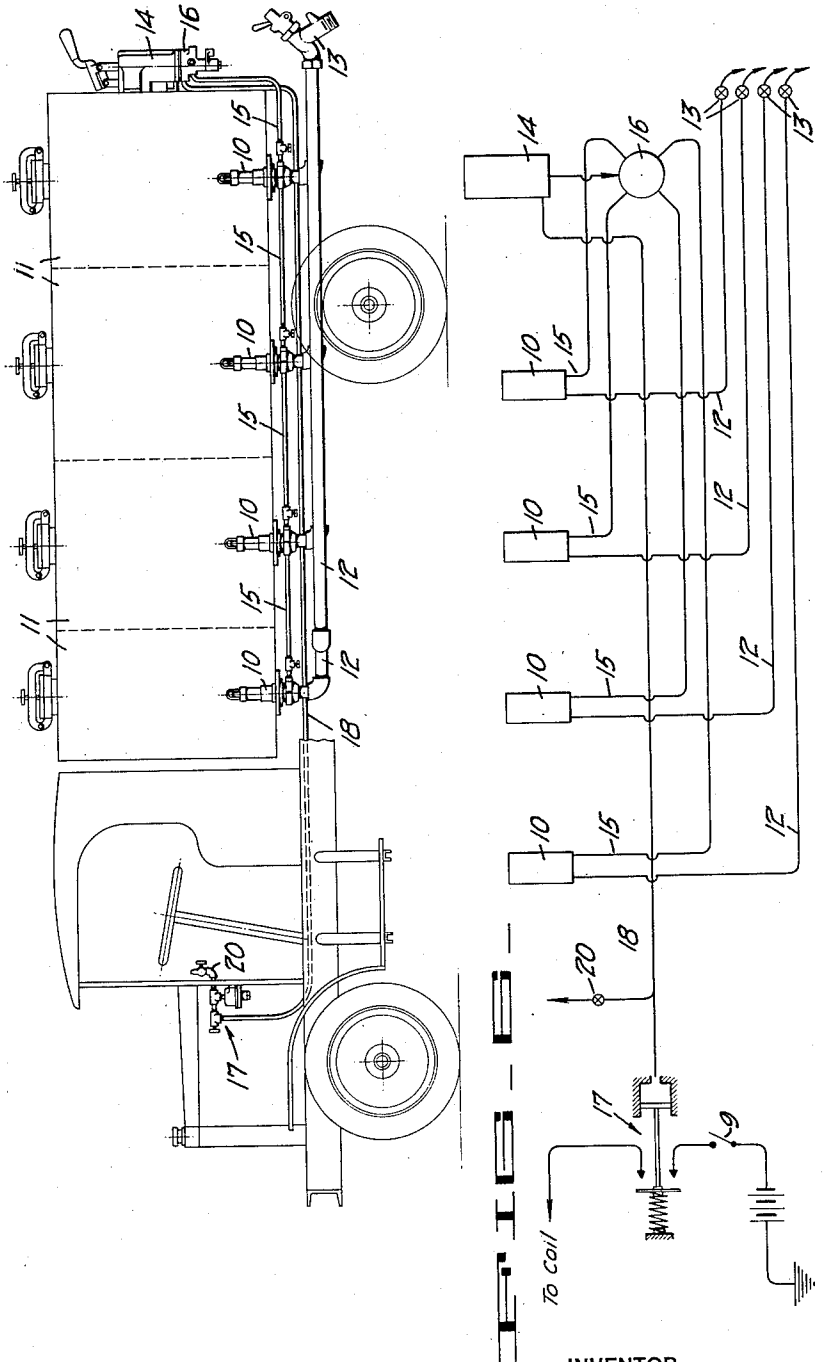

INVENTOR
Reginald C. Shand
BY
White, Prost, Fleischer & Lothrop
ATTORNEYS

May 28, 1935. R. C. SHAND 2,002,757

LIQUID DISPENSING SYSTEM

Filed Aug. 28, 1933 2 Sheets-Sheet 2

FIG. 2.

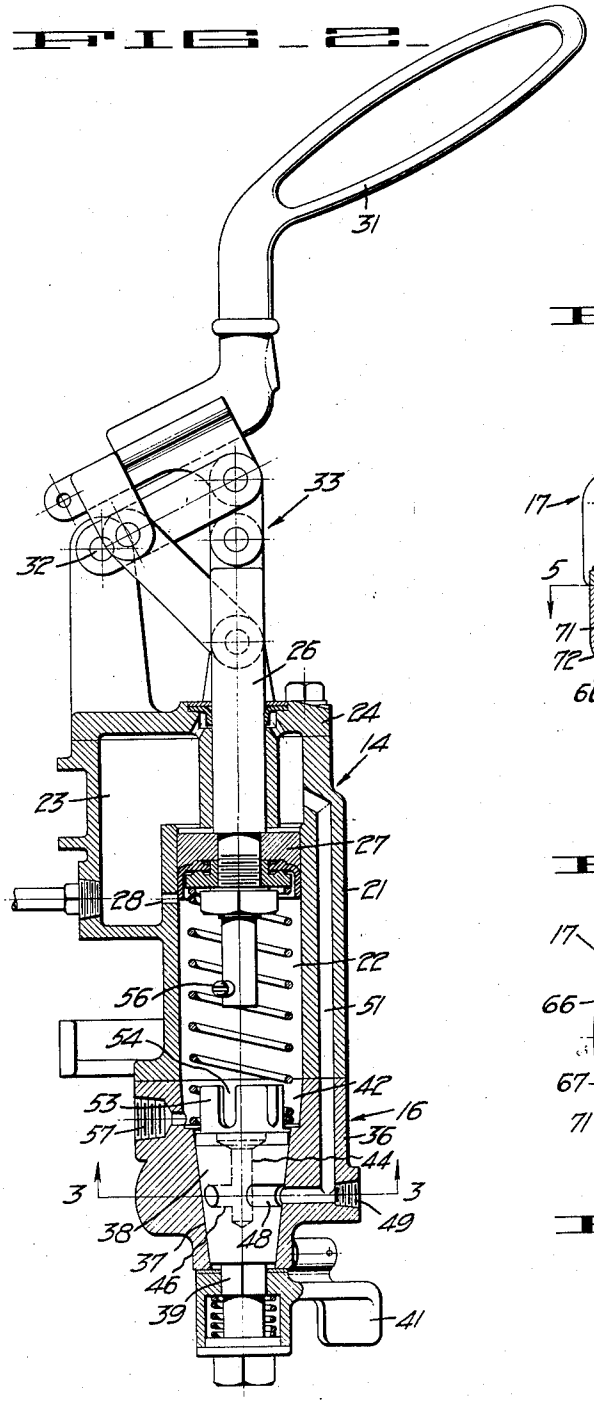

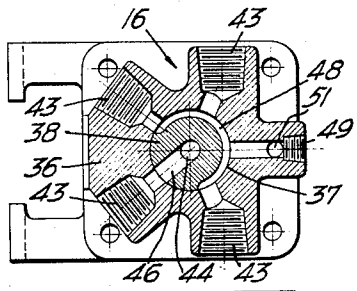

FIG. 3.

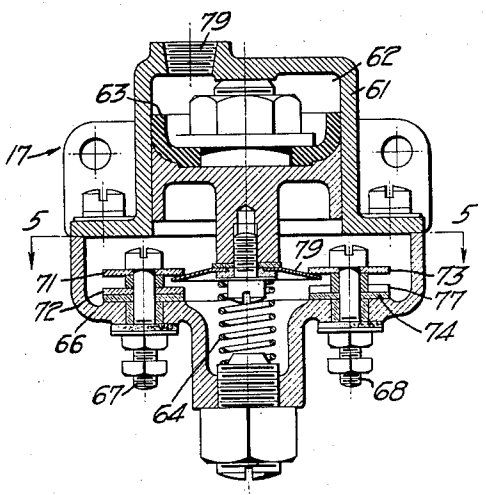

FIG. 4.

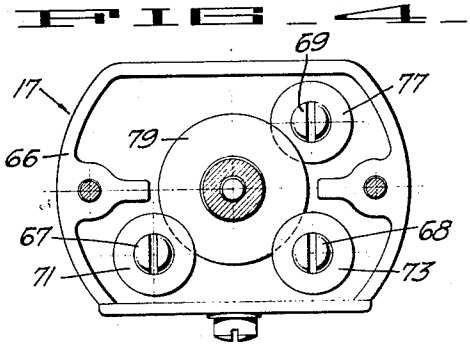

FIG. 5.

INVENTOR
Reginald C. Shand
BY
White, Prost, Fisher & Lothrop
ATTORNEYS

Patented May 28, 1935 2,002,757

UNITED STATES PATENT OFFICE

2,002,757

LIQUID DISPENSING SYSTEM

Reginald C. Shand, Piedmont, Calif.

Application August 28, 1933, Serial No. 687,038

4 Claims. (Cl. 221—67)

This invention relates generally to systems for dispensing liquid from the tanks or tank compartments of a motor vehicle, particularly where the liquid is of an inflammable character such as gasoline or kerosene.

It is an object of the invention to provide a system of the above character which will preclude the possibility of dispensing liquid when the motor of the vehicle is in operation, thus avoiding a fire hazard.

Further objects of the invention will appear from the following description in which the preferred embodiment of the invention has been set forth in detail in conjunction with the accompanying drawings.

Referring to the drawings:

Figure 1 is a side elevational view of a motor truck, to which the system of the present invention has been applied.

Fig. 2 is a side elevational view, in transverse cross-section, illustrating a form of hydraulic actuator which can be utilized with the system shown in Fig. 1.

Fig. 3 is a cross sectional detail taken along the line 3—3 of Fig. 2.

Fig. 4 is a side elevational view, in cross section, showing a form of fluid pressure operated switch utilized in conjunction with my system, for disrupting operation of the vehicle motor while liquid is being dispensed from the tank or tank compartments.

Fig. 5 is a cross sectional detail taken along the line 5—5 of Fig. 4.

Fig. 6 is a schematic layout of my complete system.

The present specification is a continuation in part of subject matter disclosed in my copending application Ser. No. 355,711, filed April 17, 1929, entitled Valve control system. The system as disclosed herein utilizes valve units which are adapted to control flow of liquid from the different tanks or tank compartments of a motor truck, and these valve units are adapted to be operated to effect opening of the same by the use of means for applying hydraulic pressure thereto, commonly termed a hydraulic actuator. A pressure operated electrical switch is incorporated in conjunction with the ignition circuit for the motor truck engine, and this switch is so associated with the hydraulic valve system that when the actuator is operated to effect opening of one of the valve units, the ignition circuit of the engine is rendered inoperative.

Referring now to Fig. 1 of the drawings, the system as disclosed consists of a plurality of valve units 10, associated with the tank compartments 11. Connected with each of the valve units 10, there is a liquid discharge conduit 12, leading to a rear faucet 13. A hydraulic actuator 14 is shown mounted near the rear end of the truck, and in conjunction with this actuator there is a distributing valve 16. Pipe lines 15 between the distributing valve 16 and the valve units 10, serve to transmit liquid pressure from the actuator to the several valve units, to effect their operation. Mounted near the forward end of the truck and adjacent the engine, there is an electrical switch device 17 adapted to be operated by liquid under pressure, and which is likewise connected to the actuator 14 thru the pipe 18. Pipe 18 may also be provided with a valve controlled vent 20, by means of which the operator may relieve hydraulic pressure from the system in the event of an emergency.

The hydraulic valve units can vary as to construction, suitable units of this character being disclosed in my aforesaid application Serial No. 355,711. A suitable actuator 14 is illustrated in Figs. 2 and 3 and is likewise disclosed in my aforesaid application Serial No. 355,711. Briefly, this actuator consists of a hollow body or casing 21 which is formed to provide a cylinder bore 22. The upper portion of the body is formed to provide a liquid reservoir 23 which is normally closed by plate 24. Slidably extending into the body 21 there is a piston rod 26, to the lower end of which is secured a piston 27. The reservoir 23 is adapted to contain a suitable quantity of liquid, such as lubricating oil, and is in communication with the space below piston 27 through port 28.

For actuating the piston rod 26, a hand lever 31 is provided, which swings about the pivotal connection 32, and which is operatively connected to the upper end of the piston rod 26 through a toggle linkage mechanism 33. When the lever 31 is in its uppermost position, as shown in Fig. 1, port 28 is exposed by piston 27 to insure filling the space below the piston with liquid from the reservoir 23. When lever 31 is forced downwardly to its lowermost position, piston 27 is forced downwardly to displace the liquid in cylinder 23 to one of the valve units to be actuated.

The selecting or distributing valve 16 may consist of a hollow valve body 36, which is removably secured to the lower end of the casing 21. A valve seat 37 is formed within body 36, and rotatably positioned within the valve seat there is a valve member 38. For rotating the valve

member 38 to any one of a number of selected positions, a stem 39 is shown projecting from one end of the same, and to this stem there is secured an operating lever 41. An opening 42 in the upper portion of the valve body 36 establishes communication between the lower portion of the cylinder bore 22, and the valve member 37. For establishing communication between any one of the several pressure pipe lines 17 and the valve body 36, the valve body is shown provided with a plurality of discharge openings or passages 43 (Fig. 3), which are spaced circumferentially and which communicate with the valve seat 37. The valve member 38 is provided with a central passage 44 communicating with the upper opening 42 and cylinder bore 22, and with a radial extending port 46, which communicates between the periphery of the valve member 38 and the central passage 44. Port 46 is adapted to communicate with any one of the passages 43, depending upon the position of the valve member 38. Thus by moving selecting lever 41 to any one of a number of predetermined positions, the operator can establish communication betwen the cylinder bore 22 and any one of the pipe lines 17, to effect operation of any one of the valve units 10.

The selecting valve illustrated is also provided with means to insure return of an actuated valve unit to normal closed position, when the setting of the selecting lever is changed. Thus valve member 38 has been shown provided with a recess or port 48, which extends about the periphery of valve member 38 a substantial distance, and which is capable of communicating with all but one of the passages 43 for any one selected position of the lever 41. This recess or port 38 is also in continuous communication with the port 49, which in turn is in communication with the reservoir 23 thru passage 51. Therefore for any operating position, all of the passages 43 will be in communication with reservoir 23 thru recess or port 48, port 49, and passage 51, except of course that passage 43 which is in registry with port 46.

To preclude movement of the selecting valve member 38 while the piston 27 is in an actuated position, the upper end of the valve member 38 is shown provided with a skirt 53, in which circumferentially spaced slots 54 are formed. The inner end of piston rod 23, below the piston 27, is provided with a radially extending screw or like member 56, which is accommodated within one of the slots 54 when the piston is in its lower actuated position.

Since it is desired to operate the electrical switch device 17 by hydraulic pressure from the actuator described above, irrespective of which one of the valve units is selected for operation, I have shown a passage 57 communicating directly with the cylinder bore 22 below piston 27, and to which the pipe line 18 may be connected. Therefore whenever the handle 31 of the actuator is forced downwardly, pressure is transmitted thru pipe 18 to the switch device 17. As will be presently explained, this switch device is adapted to render the ignition circuit of the engine inoperative, before sufficient pressure has been developed to effect opening of the selected valve unit.

A suitable form of switch 17 is illustrated in detail in Figs. 4 and 5. It consists of a body 61, formed to provide a cylinder bore 62. Fitted within the bore 62 there is a piston 63, which is urged in one direction by the compression spring 64. Mounted upon the hollow casing part 66 and electrically insulated therefrom, are the electrical connector terminals 67, 68 and 69. Electrically connected to the terminal 67, are the two spaced contactors 71 and 72. Terminal 68 is also provided with a contactor 73 corresponding to the contactor 71, but with insulation 74 corresponding to the contactor 72. Terminal 69 is provided with a single contactor 77 corresponding to the contactor 72. Cooperating with the contactors just described, there is a contactor bridge 79, which is secured to the piston 63, and which in this instance is in the shape of a disc. When the piston 63 moves downwardly as viewed in Fig. 4, electrical connection between terminals 67 and 68 is interrupted and electrical connection between terminals 67 and 69 is established. A passage 79 is provided in body 61, for making connection with pipe 18, whereby when liquid pressure is transmitted thru this pipe, piston 63 is forced against the pressure of spring 64.

A set of three terminals is provided with switch device in order that it may readily adapt itself to either a battery ignition circuit, or an ignition circuit of the magneto type. Thus when operating upon the conventional battery ignition, terminal 67 is connected to the usual ignition switch, while terminal 68 is connected to the high tension ignition coil. In other words in this case the terminals 67 and 68 are connected in series with the low potential side of the ignition system. With a conventional magneto system, terminal 67 is grounded, and terminal 69 is connected to the usual conductor which leads from the magneto to the magneto switch. Assuming first that connections are made to terminals 67 and 68 previously explained for a battery ignition system, when piston 63 is in the position shown in Fig. 4, corresponding to periods when it is not being subjected to liquid pressure, the battery circuit is properly completed thru the terminals 67 and 68, thus permitting normal operation of the engine. However when piston 63 is moved by hydraulic pressure transmitted thru pipe 18, movement of piston 63 causes the circuit between terminals 67 and 68 to be broken, thus interrupting the engine ignition circuit and precluding normal operation of the engine, or arresting its operation in the event the engine has previously been operating. When connections are made to terminals 67 and 69 of the magneto ignition circuit, movement of piston 63 under liquid pressure serves to short circuit the ignition system, thus likewise precluding operation of the engine.

Operation of my system as a whole can best be understood by reference to the diagrammatic layout of Fig. 6. In this case the switch device 17 has been interposed between the usual ignition switch 9 and the coil of a battery ignition system. Assuming that an operator now desires to operate one of the valve units 10, the selecting valve 16 is set accordingly, and the actuator 14 is operated to transmit liquid under pressure thereto. During the initial movement of the handle for the actuator, sufficient hydraulic pressure is built up to move piston 63 of the switch device 17 to disrupt the engine ignition circuit, thus precluding operation of the engine, or interrupting its operation in the event the operator has previously neglected to turn off the ignition switch. Thereafter when the operator moves the actuator handle to completely actuated position, the selected valve unit is opened to permit the dispensing of the desired liquid. After a dispensing operation the ignition circuit

is automatically established, to permit normal operation of the truck.

I claim:

1. In a system of the character described, a motor vehicle carrying a liquid tank, a fluid pressure-operated valve unit for dispensing liquid from said tank, means for applying fluid under pressure to said valve unit to effect opening of the same, and fluid pressure-operated means having a fluid connection with said last named means and serving to preclude operation of the motor of the vehicle when said valve unit is opened.

2. In a system of the character described, a motor vehicle carrying a liquid tank, the motor thereof having an ignition circuit, a fluid pressure operated valve unit for dispensing liquid from said tank, means for applying fluid under pressure to said valve unit to effect opening of the same, a fluid pressure operated switch in the ignition circuit, and a fluid connection between said switch and said last named means for automatically disrupting the ignition circuit while liquid is being dispensed.

3. In a system of the character described, a motor vehicle carrying a liquid tank, the motor thereof having an ignition circuit, a plurality of fluid pressure operated valve units for dispensing liquid from said tank, a common hydraulic actuator for selectively applying fluid pressure to said valve units to effect opening of the same, a fluid pressure operated switch device in the ignition circuit, and a fluid connection between said switch device and said actuator for causing automatic disruption of the ignition circuit while any one of said valve units is being actuated by hydraulic pressure.

4. In a system of the character described, a motor vehicle carrying a liquid tank, the motor thereof having an ignition circuit, a plurality of fluid pressure-operated valve units for dispensing liquid from said tank, a common fluid pressure actuator for operating said valve units, a distributing valve having fluid communication with the actuator and with the valve units, a fluid-operated switch device in the ignition circuit, and a fluid connection between the switch device and said actuator for causing automatic disruption of the ignition circuit while any one of said valve units is being actuated by fluid pressure.

REGINALD C. SHAND.