F. MÜLLER.

PRESS.

APPLICATION FILED APR. 3, 1914.

1,169,559.

Patented Jan. 25, 1916.

2 SHEETS—SHEET 1.

Fig. 1.

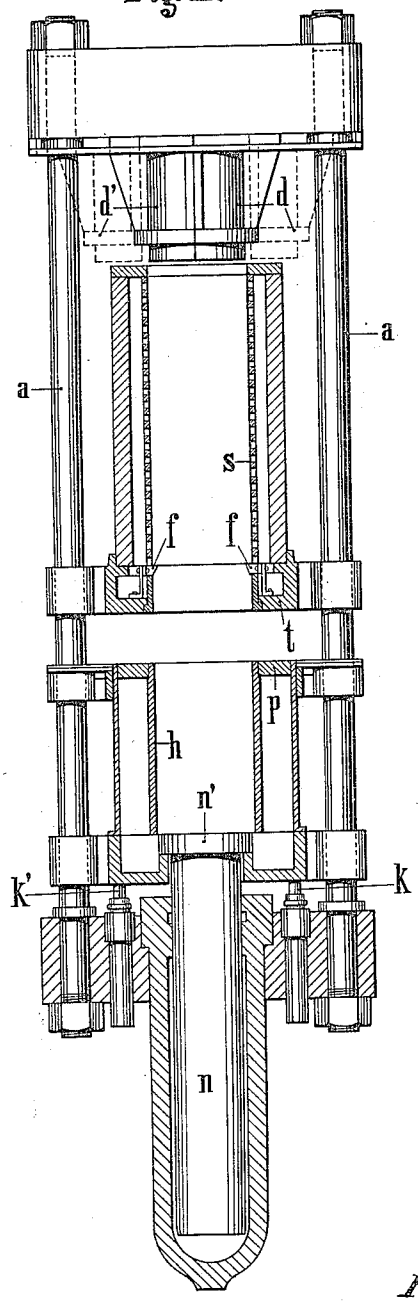

Witnesses:
Chas. E. Whittemore.
H. D. Penney.

Inventor:
Fritz Müller,
By his Atty,
W. H. Richards.

THE COLUMBIA PLANOGRAPH CO., WASHINGTON, D. C.

F. MÜLLER.

PRESS.

APPLICATION FILED APR. 3, 1914.

1,169,559.

Patented Jan. 25, 1916.

2 SHEETS—SHEET 2.

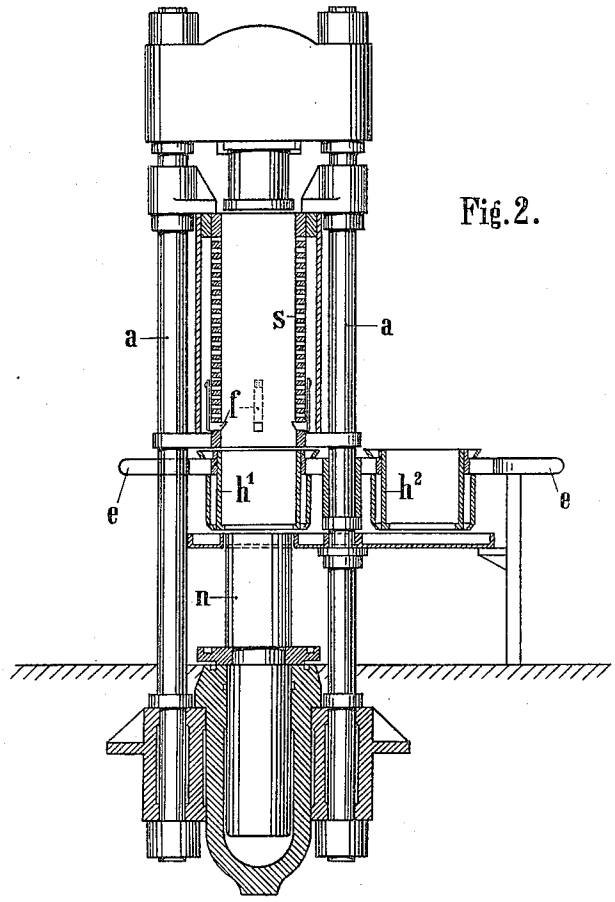

Fig. 2.

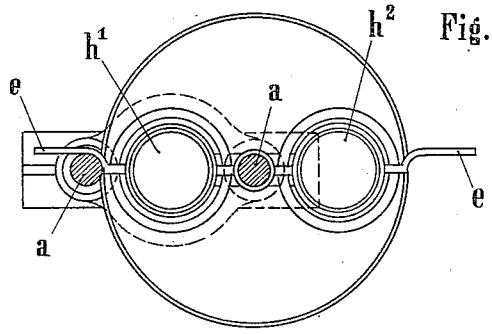

Fig. 3.

Witnesses:

Chas. E. Whiteman.

H. D. Penney

Inventor:

Fritz Müller,

By his Atty, Jr. H. Richards.

THE COLUMBIA PLANOGRAPH CO., WASHINGTON, D. C.

UNITED STATES PATENT OFFICE.

FRITZ MÜLLER, OF ESSLINGEN-ON-THE-NECKAR, GERMANY.

PRESS.

1,169,559. Specification of Letters Patent. Patented Jan. 25, 1916.

Application filed April 3, 1914. Serial No. 829,164.

To all whom it may concern:

Be it known that I, FRITZ MÜLLER, manufacturer, a subject of the King of Wurttemberg, residing in Esslingen-on-the-Neckar, in the Kingdom of Wurttemberg, Germany, have invented certain new and useful Improvements in Presses, of which the following is a specification.

This invention relates to presses, such for instance as those used in compressing oil or fruit of any kind, in which the material to be treated is placed in a drum having perforated walls.

It is well known in the art to provide a main drum that is open at the top and through the bottom of which the material to be pressed is introduced from an auxiliary tank and the resulting pressed material then discharged from such open upper end. Heretofore, however, such presses utilized separate plungers and drums for the operations of filling and pressing. Consequently these apparatuses were complicated and occupied considerable space. Both these disadvantages are overcome by the present invention, in that the same piston is used for feeding material into the pressing drum, discharging the resulting pressed material from such pressing drum, and for pressing the newly introduced material. Although the drum is open at the top when the drum is being filled, it will be closed by special closing means during the operation of pressing. Furthermore, according to the present invention, in order to confine the press into the smallest space possible, the auxiliary tank which is used for introducing new material is movably disposed in a vertical direction under the pressing drum. In its descended position, this auxiliary tank is filled and in its raised position its contents are pressed or introduced into the pressing drum.

Where there is sufficient room, two swingingly mounted auxiliary tanks may be provided, which will be filled when disposed in their outer position and their contents discharged into the pressing drum when disposed in an inwardly swung position. Such auxiliary tanks are well known in the art, but are new in combination with a press in which one piston serves both for filling and pressing the material.

In Figure 1 of the drawings, there is illustrated a press, according to the present invention, provided with a vertically movable auxiliary tank; while Fig. 2 is an elevation partly in section of a press having swingingly mounted auxiliary tanks and Fig. 3 is a plan view of the construction illustrated in Fig. 2.

On the guide columns a of the embodiment illustrated in Fig. 1 are mounted in the well known manner the press table t which is movable on the columns and in its lowest position rests on collars or projections, not shown, formed on the columns. On the press table t is mounted the perforated drum s which can be of any known construction, and above the main drum s closing members d, d' are provided which can be brought together or moved apart. When they are brought together into the position shown by full lines they close the upper opening of the perforated drum but when they are drawn apart into the position shown by dotted lines, the upper end of the main drum is open.

Under the press table t is mounted a working table p which is also movable on the guide columns and provided with a cylindrical auxiliary drum or chamber h. By means of driving pistons k k', the working table p can be raised or lowered with the auxiliary chamber h. Finally below the auxiliary chamber h is arranged the press piston n, the head n' of which exactly fits the auxiliary chamber h as well as the main drum s. The parts of the press used for driving, etc., can be of any desired construction and are not shown.

The operation is as follows:—Assuming the compression in the main perforated drum s has been completed, so that the oil or other press cakes are ready to be discharged, and the main drum refilled, the working table p is lowered according to this invention to such an extent as to leave between it and the press table t sufficient space for the auxiliary chamber h to be filled from the top with the fresh material to be pressed. When the charging is completed, the working table is raised by means of the driving pistons k k', to such an extent as to press the mouth of the auxiliary chamber h close against the open lower end of the perforated drum s. The closing members d d' at the upper end of the drum s are then opened, and the large press piston n is allowed to rise. The latter then presses the fresh material from the auxiliary chamber h into the perforated drum s. If the free space of the drum s is not yet filled thereby, the work-

ing table p is again lowered, and the charging repeated, according to the proportion between the height of the drum s and of the auxiliary chamber h. When finally the whole free space of the perforated drum s is filled, and the piston rises still farther, the cakes or other compressed material contained in the upper part of the drum s are forced out through the upper open end of the drum, whereupon they are removed, and the closing members d d' are brought into the closing position. The pressing operation can then be continued direct.

To enable repeated introduction of fresh material to be pressed into the perforated drum s, spring controlled bolts or catches f are provided at the lower end of the drum s, which hold back in the well-known manner the press plate below each charge each time the piston is lowered.

To obviate the necessity of raising the working table p with the tank h toward the press table t, the chamber h may also be made in the known manner to swing out or may be rotatable about one of the press columns, as in rotary presses. The auxiliary chamber is then filled while it is swung out, and for the purpose of pressing it is turned back again under the drum s.

In the embodiment illustrated in Figs. 2 and 3, there is provided a pair of outwardly swinging tanks. In its general construction, this press is identical with that disclosed in Fig. 1, with the exception that the vertically movable tank h of Fig. 1 is supplanted by the swinging tanks h^1 and h^2. One of the columns a serves as a shaft or pivot for these swinging tanks. In the operation of this embodiment, whenever the tank h^1 is disposed under the perforated drum s, the tank h^2 will be in position where it is being filled. During this interval, the piston n will press the contents of the tank h^1 out of the tank h^1 into the perforated drum s. Thereupon the piston n will be returned and the tanks h^1 and h^2 swung by means of the handles e. This operation may thereupon be repeated, except that the tank h^2 may be emptied while the tank h^1 is being filled.

The drum s is generally changed after the charging and brought into another press for additional pressing. For many purposes, and according to the nature of the material to be pressed, it may be sufficient to press for a short time, and the pressure in the press itself is sufficient, so that the changing of the perforated drums is done away with.

What I claim is:—

1. In a press, the combination of a perforated drum, an auxiliary chamber movable relatively thereto and disposed below the main drum in axial alinement therewith, a movable cover for the upper end of the main drum and a plunger adapted to be reciprocated within the auxiliary chamber and main drum to transfer the contents of the auxiliary chamber into the main drum and thereby expel the contents of said drum.

2. In a press the combination of a perforated drum, a table disposed below said drum and movable relatively thereto, an auxiliary chamber carried by said table and disposed coaxially with the main drum, mechanism for moving the table and auxiliary chamber away from and into contact with the lower open end of the main drum and a reciprocating plunger adapted to transfer the contents of the auxiliary chamber into the main drum and thereby expel the contents of said drum.

3. In a press the combination of a perforated drum, a removable cover for the upper open end of said drum, a reciprocating table disposed below said drum, an auxiliary chamber carried by said table disposed in axial alinement with the main drum, means for reciprocating the table and chamber away from and into contact with the lower open end of the main drum and a reciprocating plunger disposed below the auxiliary chamber adapted to transfer the contents of the auxiliary chamber into the main drum and thereby expel the contents of said drum.

In witness whereof I have hereunto signed my name this 20th day of March, 1914, in the presence of two subscribing witnesses.

FRITZ MÜLLER.

Witnesses:
ROSA THALBAUER,
PAULINE MÜLLER.

Copies of this patent may be obtained for five cents each, by addressing the "Commissioner of Patents, Washington, D. C."