Aug. 3, 1954 E. L. AUYER 2,685,429

DYNAMIC SEALING ARRANGEMENT FOR TURBOMACHINES

Filed Jan. 31, 1950

Fig. 1.

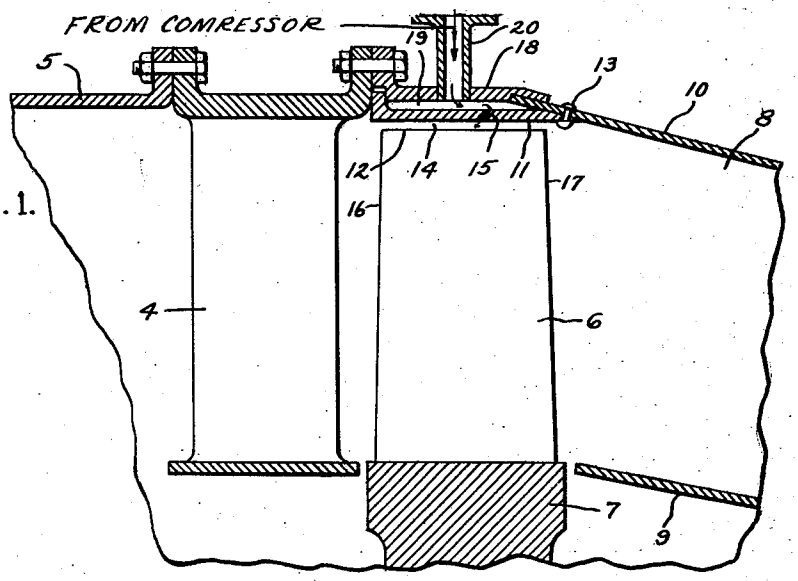

Fig. 2.

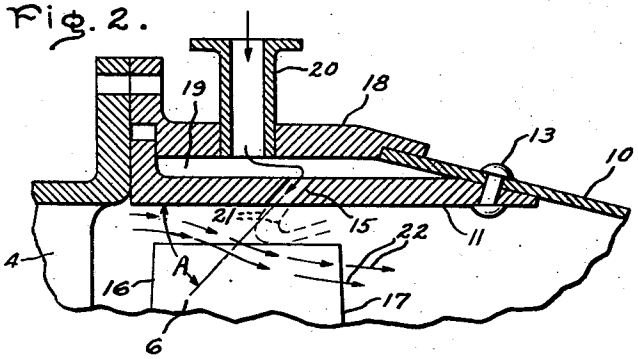

Fig. 3.

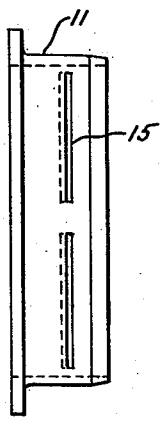

Fig. 4.

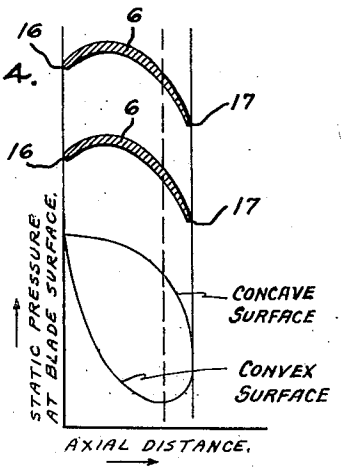

Inventor:
Earl L. Auyer,
by Ernest C. Britton
His Attorney.

Patented Aug. 3, 1954

2,685,429

UNITED STATES PATENT OFFICE

2,685,429

DYNAMIC SEALING ARRANGEMENT FOR TURBOMACHINES

Earl L. Auyer, Marblehead, Mass., assignor to General Electric Company, a corporation of New York

Application January 31, 1950, Serial No. 141,505

6 Claims. (Cl. 253—39.1)

1

This invention relates to fluid pressure energy converting devices, and more particularly to an improved sealing arrangement in such a device.

In turbo machines of the character described, mechanical clearance must be provided between a stationary portion of the machine and a rotor carrying one or more rows of blading. In order to minimize losses which arise from the fact that a portion of the motive fluid tends to leak past the tips of the rotor blades through a clearance space without doing work on the blades, it is customary to reduce such clearance to an absolute minimum commensurate with safe operation. It is necessary, however, to provide adequate mechanical running clearance in order to insure against rubbing of the blades against a stationary member during operation which might result in destruction of the machine. In such machines which are intended for operation at elevated temperatures, for example, 1000° F., or higher, the problem is further complicated because of certain physical properties, such as the coefficient of thermal expansion, of the materials which must be employed in such service.

In high temperature turbine apparatus the magnitude of the clearance space is often controlled by providing a shroud surrounding the tips of the turbine blades and spaced therefrom to provide the desired amount of operating clearance. In operation, the temperature of the shroud will closely approach the temperature of the motive fluid flowing past it due to the scrubbing action of the motive fluid thereon and due to the fact that the shroud possesses relatively little mass so that the rate of heat transfer from the fluid to the shroud is relatively high. Under the same conditions, the turbine rotor approaches the temperature of the motive fluid in the region of the rotor blades while in the central portion of the rotor, the operating temperature may be as low as 300–400° F. Consequently, the average temperature at which the turbine rotor operates is considerably less than that of the motive fluid so that, due to the differential expansion, the magnitude of the clearance space at the tip of the turbine blades may increase considerably over the preselected cold value; that is, the clearance value which exists when the turbine rotor and the shroud are both at ambient temperature.

Accordingly, it is an object of the invention to provide a fluid pressure energy converting apparatus having improved efficiency.

Another object is in the provision of turbine apparatus having an improved sealing arrangement for minimizing the leakage of motive fluid past the tips of the rotor blades.

2

Another object is in the provision of a new and improved sealing arrangement for a turbine wherein the adverse effects of temperature differentials are minimized.

Still another object is in the provision of an improved sealing arrangement wherein a jet of fluid is employed as a sealing means and at the same time cooling of critical parts is effected by the action of the cooling fluid.

Other objects and advantages will be apparent from the following description taken in connection with the accompanying drawings, in which Fig. 1 is a sectional view of a turbine provided with sealing means in accordance with the invention; Fig. 2 is an enlarged detailed view of the arrangement shown in Fig. 1 and illustrating the action of the cooling fluid in the region of the tips of the turbine blades; Fig. 3 is an elevation of the turbine shroud; and Fig. 4 is a diagrammatic view illustrating the flow through the turbine blades and typical pressure distributions at the convex and concave sides of a turbine blade.

Referring now to Fig. 1, motive fluid at elevated temperature and at a suitable pressure is supplied from a suitable source (not shown) to turbine nozzles 4 which are secured to a casing 5. Nozzles 4 convert the pressure and temperature energy of the motive fluid supplied thereto to kinetic energy and direct the motive fluid against blades 6 at a preselected angle and a preselected velocity. Blades 6 are carried by a rotor 7 which is rotatably supported by suitable bearings (not shown). The motive fluid passes through the turbine blades 6 and is then discharged to an exhaust passage 8 formed by concentric walls 9, 10.

In order to minimize leakage of motive fluid past the blades 6 without performing useful work thereon, an annular shroud member 11 surrounds tips 12 of the turbine blades and is radially spaced from the tips to provide sufficient mechanical clearance as may be necessary to avoid rubbing of tips 12 against the shroud. Shroud 11 is maintained concentric with the turbine rotor 7 and in such spaced relationship relative to the blade tips 12 by wall 10. By way of example, shroud 11 is shown secured to wall 10 by a rivet 13, but it is to be understood that the shroud can be secured relative to the blade tips 12 by other types of securing means, for example, by welding to wall 10.

A feature of the invention is in the provision of

a fluid dam in the clearance space 14 between the inner surface of shroud 11 and the blade tips 12. Such a dam is provided by introducing a jet of fluid into clearance space 14 in an upstream direction; that is, in a direction opposite to the flow of motive fluid through nozzles 4 and blades 6. To this end, I provide a circumferentially extending slot 15 in shroud 11. Slot 15 is angularly disposed with respect to the inner surface of shroud 11 to form a restricted fluid passageway through which a jet of fluid is introduced into the clearance space 14 at a location between the leading edges 16 and the trailing edges 17 of the turbine blades. It will be appreciated that by making the restricted flow passageway or slot 15 angularly disposed relative to shroud 11, as shown in Figs. 1 and 2, the fluid injected into clearance space 14 will have a substantial component of velocity in the upstream direction.

For reasons which will appear presently, I prefer to introduce the cooling fluid into clearance space 14 at a location upstream from the trailing edges 17 and spaced therefrom by an amount which is of the order of or less than 50% of the projected axial distance between the leading edges 16 and the trailing edges 17, as indicated in Figs. 1, 2 and 4.

Referring now to Figs. 1, 2, wall 10 is secured to a flange member 18, the inner surface of which is radially spaced from the outer surface of shroud 11 to provide an annular chamber 19 surrounding shroud 11 and in communication with the passageway formed by slot 15. Fluid under pressure is supplied to chamber 19 from a suitable source (not shown) through a conduit portion 20. The invention is well adapted for use in gas turbine powerplants of the types described in United States Patent 2,432,359—Streid, and in the copending applications of Alan Howard, Serial No. 506,930, filed October 20, 1943, now Patent 2,479,573, and Serial No. 541,565, filed June 22, 1944, and assigned to the assignee of the present application, and in such case, sealing fluid may be provided by connecting conduit portion 20 to the compressor and thereby supplying a portion of the compressor air flow from the powerplant to chamber 19.

In operation, motive fluid discharged by the turbine nozzles 4 is directed against the turbine blading 6 to do useful work thereon. After flowing through the turbine blades, the motive fluid is discharged into exhaust passage 3. Because of the mechanical clearance provided between tips 12 and the stationary shroud 11, a portion of the motive fluid tends to leak past the tips of the turbine blades through clearance space 14 without doing any useful work on the turbine blading. Fluid under pressure is supplied through conduit portion 20 to chamber 19. This fluid under pressure then flows through slot or passageway 15 into clearance space 14 which is a region of lower pressure than that of the fluid supply means. Upon being discharged from the passageway formed by slots 15, the fluid forms a jet in clearance space 14 having a substantial component of velocity in an upstream direction as clearly indicated by the broken lines 21 in Fig. 2. The motive fluid issuing from nozzles 4 flows in a downstream direction and at relatively high velocity with respect to shroud 11 and blades 6, and opposite to the inward and upstream flow of fluid issuing from slots 15, thereby causing the jet to be deflected and flow as indicated in Fig. 2 in a downstream direction and ultimately to mix with the motive fluid discharged from turbine blades 6. In opposing the inward and upstream flow of fluid from passageway 15, a portion of the motive fluid issuing from nozzles 4 tends to flow through clearance space 14 in a downstream direction, but is deflected radially inward as shown by arrows 22, Fig. 2, and thereby is caused to do useful work on the turbine blades 6. Thus by providing an air dam, or dynamic sealing of clearance space 14, by introducing a jet of fluid therein, the turbine is provided with an improved seal against the leakage of motive fluid past the tips of the turbine blades and the turbine efficiency is thereby improved.

In order to insure that the sealing fluid is introduced into clearance space 14 with a substantial component of velocity in an upstream direction, and to prevent the jet of sealing fluid from penetrating too deeply into the stream of motive fluid, I prefer to introduce the sealing fluid into clearance space 14 at an angle α relative to the inner surface of shroud 11 and in an upstream direction of the order of magnitude of or less than 45 degrees, as indicated in Fig. 2.

In order to consider the question of the axial location of the jet of sealing fluid with respect to the leading edges 16 and the trailing edges 17 of blades 6, reference is made to Fig. 4. In addition to the fact that a portion of the motive fluid tends to flow past the tips 12 through clearance space 14 in an axial direction, there is also a possibility that a portion of the motive fluid may flow in a circumferential direction past the tips 12 from the space between an adjacent pair of blades 6 through clearance space 14 and into the space defined between a next adjacent pair of blades due to the pressure differential that exists across the two surfaces of the blades. A typical pressure distribution at the convex and at the concave sides of a turbine blade is shown in Fig. 4. In addition to the loss caused by flow in a circumferential direction, such flow may occasion further losses since it may induce separation of the flow of motive fluid from the convex surface of the blade near the tip and near the trailing edge 17 where the static pressure is rising. In order to minimize such losses, I prefer to introduce the jet of fluid into clearance space 14 at a location where the pressure at the concave surface of blade 6 is falling rapidly so that the differential pressure for causing flow in a circumferential direction between the jet location and the trailing edges 17 is minimized. Tests show that good results are obtained by spacing the jet upstream from the trailing edges 17 by an amount of the order of 25% of the projected axial distance between the leading edges 16 and the trailing edges 17 of the turbine blades. Because of the pressure difference across the convex and concave surfaces near the leading edges, the jet location should be spaced upstream from the trailing edge 17 by an amount not greater than 50% of said projected distance. With such an arrangement, motive fluid in the clearance space and upstream from the jet is deflected into the blades, and once this flow is deflected into the blades it will remain there if there is little or no pressure differential between the concave and convex sides of the blades.

Another feature of the invention is in the cooling of shroud 11 and in the reduction of differential expansion tending to increase the clearance between shroud 11 and blade tips 12 as the turbine comes up to operating temperature. In accordance with the invention, cooling fluid is

caused to pass over the outer surfaces of the shroud, thereby cooling it, and additional cooling is obtained from action of the fluid passing through the passageway formed by slots 15 at high velocity. In addition, that portion of the shroud which is downstream from slots 15 is effectively insulated from direct contact with the hot motive fluid by the jet which forms a relatively thin film of cooling fluid between the inner surface of shroud 11 and thereby insulates it against direct contact with the hot motive fluid, as is indicated in Fig. 2. The transfer of heat from the motive fluid to the portions of the shroud disposed at the upstream side of the jet of fluid issuing from passageway 15 is effectively reduced by the formation of a stagnant region along the inner surface of the shroud in clearance space 14 at the upstream side of slots 15. This region is formed due to the action of the air dam introduced into clearance space 14 and consists of a layer of stagnant fluid interposed between the inner surface of shroud 11 and the hot high-velocity motive fluid issuing from nozzles 4, thus preventing a high rate of heat transfer from the motive fluid into shroud 11.

Thus it will be seen that my invention provides an improved sealing arrangement for turbines and thus improves turbine efficiency; and at the same time it provides cooling for certain critical parts to minimize adverse effects of differential expansion, as well as providing a reduction in heat transfer from the high temperature motive fluid to critical parts of the sealing arrangement.

While a particular embodiment of the invention has been illustrated and described, it will be obvious to those skilled in the art that various changes and modifications may be made without departing from the invention, and it is intended to cover in the appended claims all such changes and modifications that come within the true spirit and scope of the invention.

What I claim as new and desire to secure by Letters Patent of the United States, is:

1. In a fluid pressure energy converting device including a rotor carrying at least one row of blades, sealing means for preventing excessive leakage of motive fluid across blade tips comprising shroud means spaced from and surrounding said tips to form a clearance space, circumferentially extending nozzle means having an entrance portion axially spaced downstream from the leading edges of said blades and a discharge portion axially spaced between said entrance portion and said leading edges and carried by said shroud means for directing a jet of fluid into said clearance space with a substantial axial component of velocity toward said leading edges, and means for supplying fluid under pressure to said nozzle means.

2. In an elastic fluid turbine including a rotor carrying at least one row of axial flow blades having tip portions and upstream and downstream edge portions, an annular shroud surrounding said tip portions and having an inner wall surface spaced from said tip portions and

defining a clearance space therewith, said shroud having a circumferentially extending restricted fluid flow passageway therein, said passageway being in communication with said clearance space at a location between said leading and trailing edge portions of said blades, said passageway being inclined at an angle less than normal to said wall surface and having a discharge portion axially spaced from an entrance portion thereof for discharging a jet of fluid into said clearance space with a component of velocity toward said upstream edge portions, and means for supplying fluid under pressure to said passageway.

3. Apparatus in accordance with claim 2 wherein said passageway is angularly disposed relative to said wall surface in the region of said location at an angle not greater than 45 degrees.

4. Apparatus in accordance with claim 3 wherein said passageway communicates with said clearance space at a location spaced upstream from said downstream edge portions, said spacing being of the order of magnitude of one-fourth of the projected axial distance between said upstream and downstream edge portions.

5. Apparatus in accordance with claim 4 wherein said spacing is not greater than one-half of the projected axial distance between said upstream and downstream edge portions.

6. In a turbomachine for operation at elevated temperatures including a flow passageway and a rotor carrying at least one row of blades having tip portions and leading and trailing edge portions, an annular shroud surrounding said tip portions and spaced therefrom to form a close clearance space therewith, a wall portion surrounding said shroud and spaced from the outer surface thereof, said shroud having edge portions disposed in cooperative relation with said wall portion to define an annular passageway surrounding said shroud, said shroud having therein a circumferentially extending second passageway between said leading and trailing edge portions and having a first end portion communicating with the annular passageway and having a second end portion axially spaced upstream with respect to said flow passageway from said first end portion communicating with said clearance space for directing a jet of fluid into said space with a component of velocity in an upstream direction, and means for supplying fluid to said annular passageway.

References Cited in the file of this patent

UNITED STATES PATENTS

Number	Name	Date
2,390,506	Buchi	Dec. 11, 1945
2,445,661	Constant	July 20, 1948
2,457,833	Redding	Jan. 4, 1949

FOREIGN PATENTS

Number	Country	Date
346,599	Germany	Jan. 5, 1922
383,506	Germany	Oct. 13, 1923
398,929	Germany	July 18, 1924