United States Patent [19]

Rodriguez

[11] **3,807,856**

[45] **Apr. 30, 1974**

[54] **ILLUMINATION SYSTEM FOR A PHOTOCOPYING MACHINE**

[75] Inventor: **Lee L. Rodriguez,** Elk Grove, Ill.

[73] Assignee: **SCM Corporation,** New York, N.Y.

[22] Filed: **Dec. 6, 1971**

[21] Appl. No.: **205,335**

Related U.S. Application Data

[63] Continuation of Ser. No. 861,275, Sept. 26, 1969, abandoned.

[52] **U.S. Cl.** **355/67,** 355/8, 355/11, 355/82, 355/25

[51] **Int. Cl.** **G03b 27/54**

[58] **Field of Search** 355/8, 11, 67, 82, 83, 355/84, 104, 110, 25; 240/11.4, 41.3, 41.35

[56] **References Cited**

UNITED STATES PATENTS

2,807,190	9/1957	Oldenboom	355/8
3,637,303	1/1972	Komori	355/8
3,219,799	11/1965	Trumbull	355/3
3,451,752	6/1969	Frank	355/8
3,375,752	4/1968	Fairbanks	240/11.4 R X
3,428,397	2/1969	Elmer	355/11
2,546,482	3/1951	Van Der Grinten	355/104
3,398,259	8/1968	Tregay	355/3 X

Primary Examiner—Monroe H. Hayes

[57] **ABSTRACT**

A photocopying machine produces a copy of a page of a bound book placed on a stationary window by moving an optical projection system past the window for projecting the images of successive elongated strip portions of the page onto a light sensitive copy material. The portion of the page placed flat against the window is maximized by providing a downwardly extending wall adjacent an edge of the window to minimize the portion of the page adjacent the binding being pulled out of focus by the binding of the book. Movable past the window with the optical projection system is an illumination system for illuminating an elongated strip portion of the page for projection onto the light sensitive copy material. The illumination system has a physical configuration substantially coextensive with the illuminated strip portion being projected onto the copy paper, and one end of the illumination system is substantially coextensive with the edge of the window adjacent the downwardly extending wall. The illumination system includes an elongated elliptical reflector and an in-line lamp located at the longitudinally extending focal point of the elliptical reflector. Transverse reflectors are located at the opposite ends of the elliptical reflector and extend obliquely to the longitudinally extending focal point of the elliptical reflector for covering the non-light radiating terminal portions of the in-line lamp which is supported at the longitudinally extending focal point by suitable electrical contact means.

2 Claims, 7 Drawing Figures

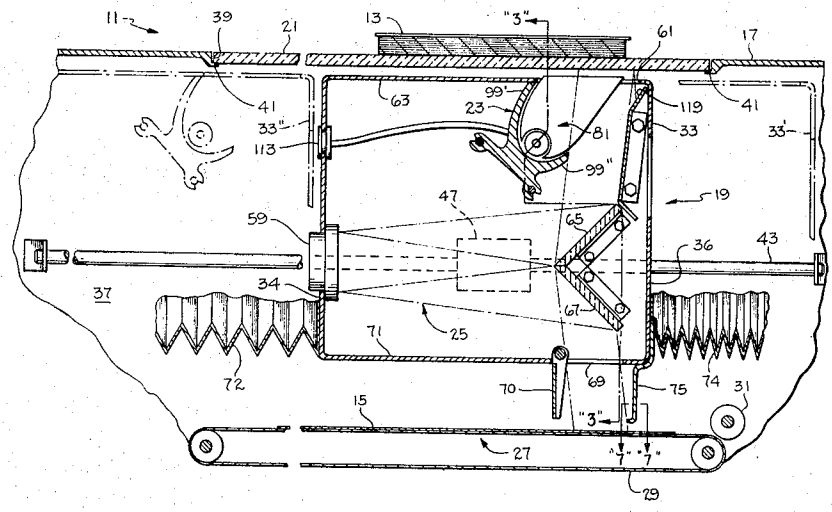

PATENTED APR 30 1974

3,807,856

SHEET 1 OF 4

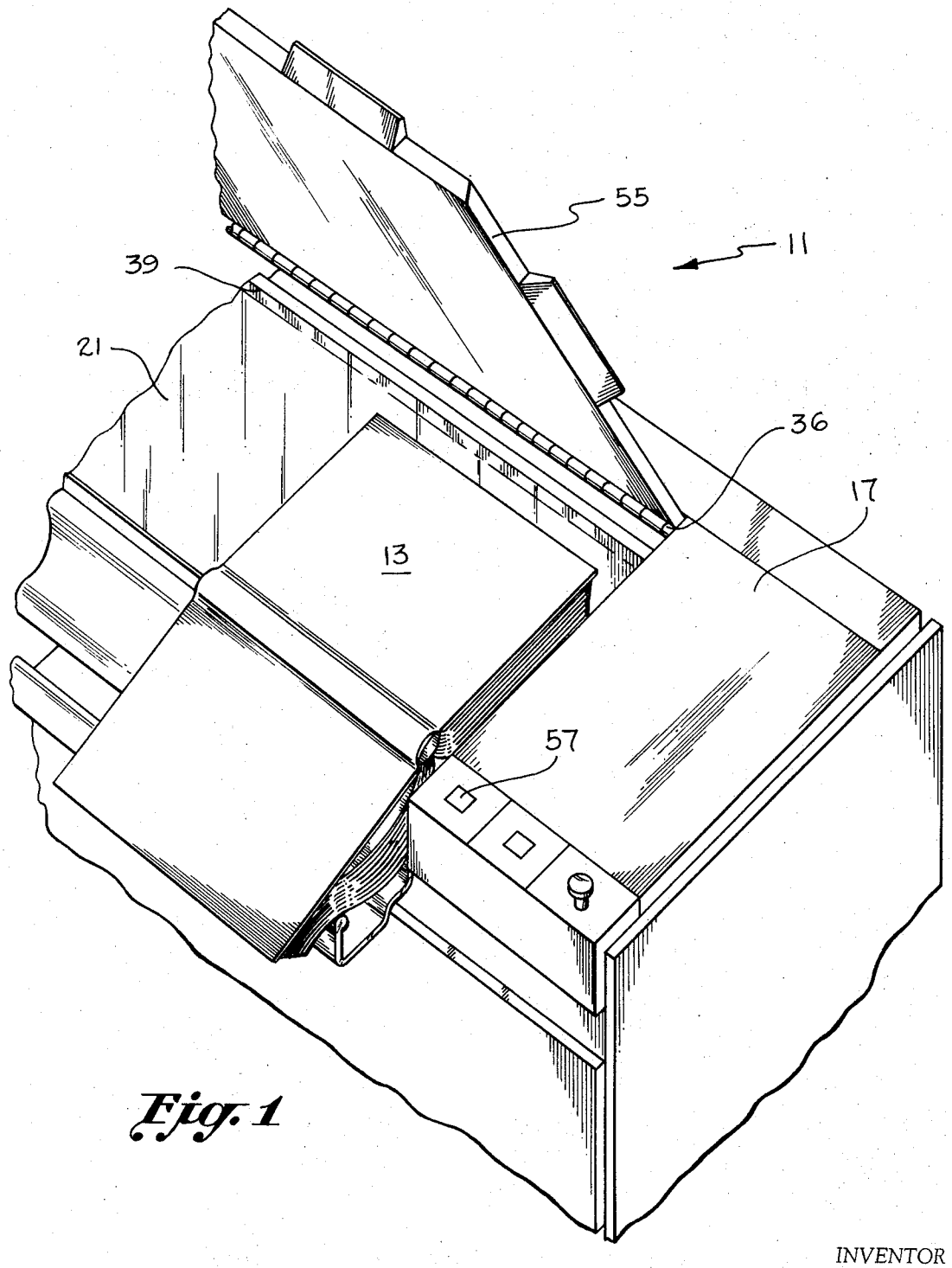

Fig. 1

INVENTOR
LEE L. RODRIGUEZ

BY Gerald S. Schur et al
Keith D. Moore
ATTORNEYS

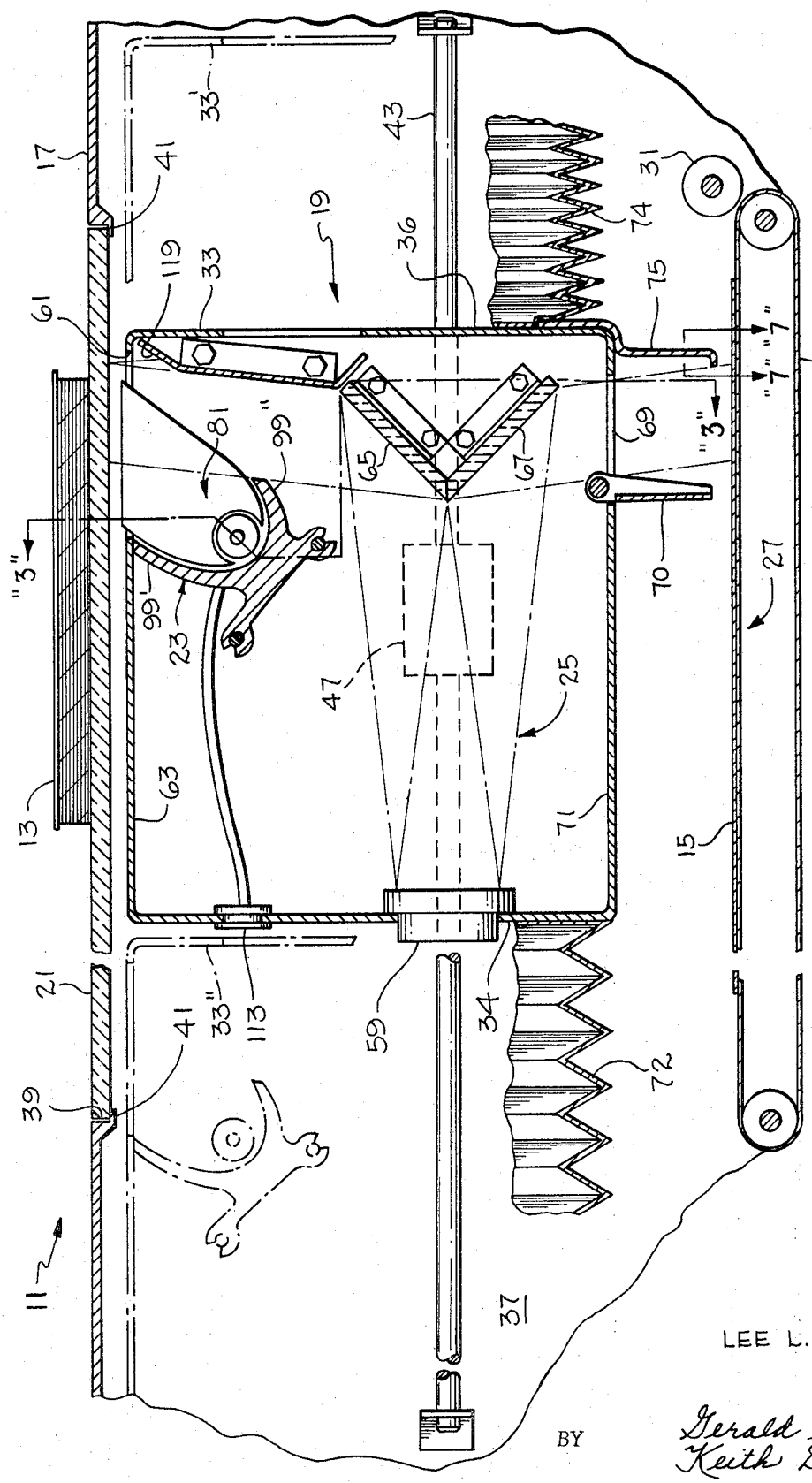

Fig. 2

INVENTOR
LEE L. RODRIGUEZ

BY Gerald S. Schur &
Keith D. Moore
ATTORNEYS

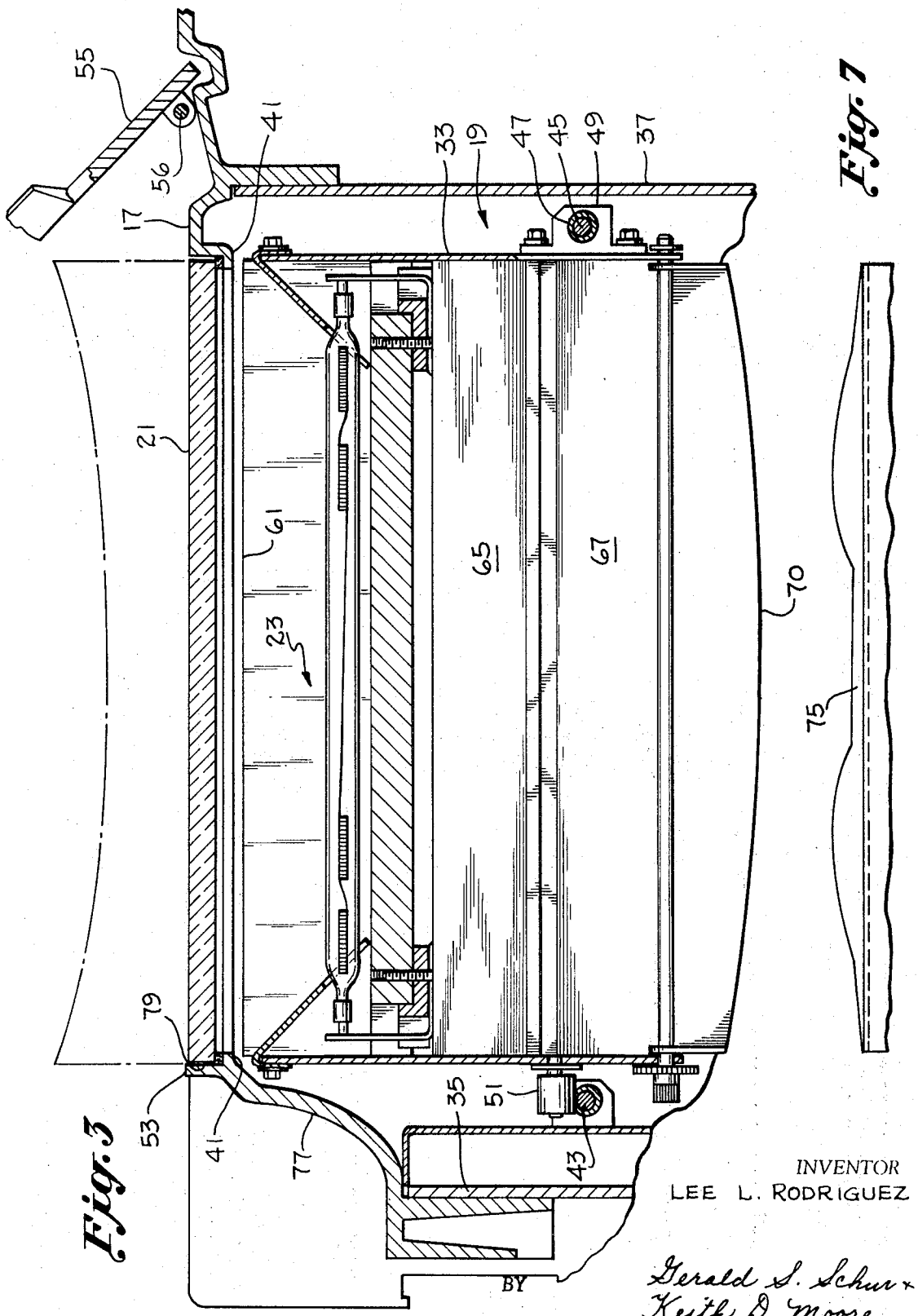

Fig. 7

Fig. 3

INVENTOR
LEE L. RODRIGUEZ

BY

Gerald S. Schur
Keith D. Moore
ATTORNEYS

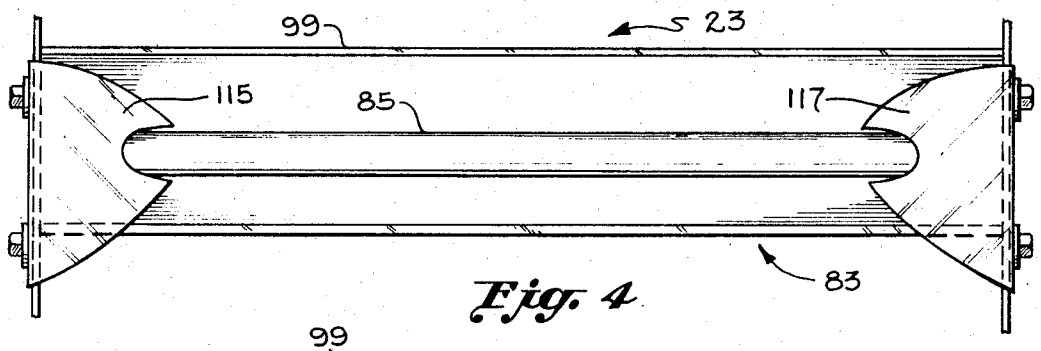

Fig. 4

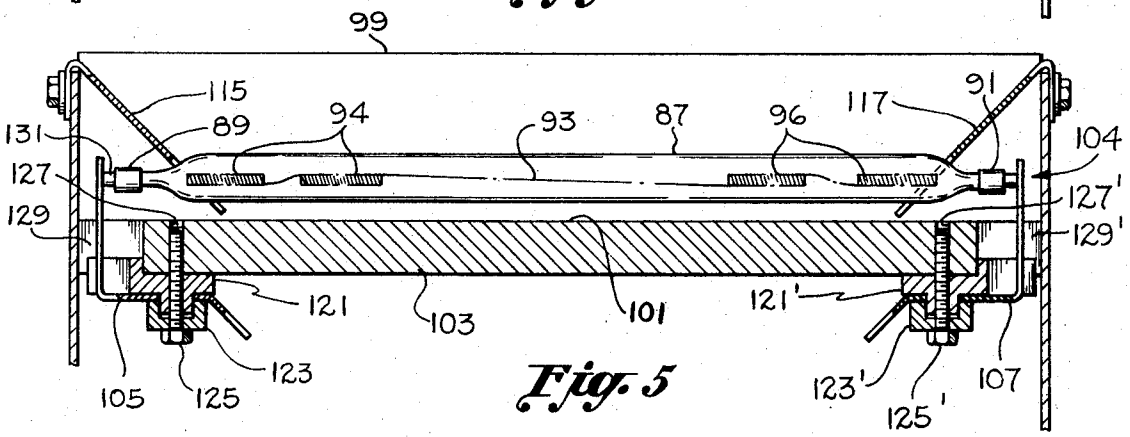

Fig. 5

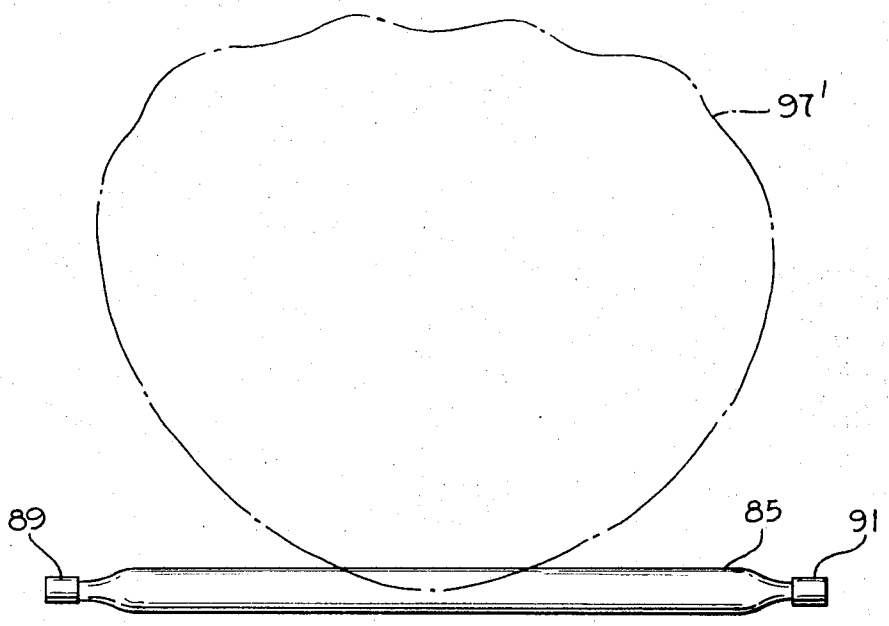

Fig. 6

INVENTOR
LEE L. RODRIGUEZ

BY Gerald S. Schur
Keith D. Moore
ATTORNEYS

ILLUMINATION SYSTEM FOR A PHOTOCOPYING MACHINE

This application is a continuation of U.S. Pat. Application Ser. No. 861,275, filed Sept. 26, 1969, now abandoned.

This invention relates to an illumination system, and more particularly to an illumination system for use in an electrostatic photocopying machine for producing a copy of a document which is maintained in a stationary position during the copying process.

In an electrostatic photocopying machine, a copy of a document is produced by illuminating the document and projecting the image thereof onto a photoconductive surface of a copy material having a uniform electrostatic charge. The face of the document is placed against a window, and the image of the illuminated document is projected by an optical projection system which is focused on both the window, which is located at an object plane, and the photoconductive surface of the copy paper which is located at an exposure station. As the photoconductive surface is exposed to the projected image of the document, the uniform electrostatic charge is selectively dissipated according to the light and dark portions of the projected image to form a latent electrostatic image of the document. The portions of the projected image corresponding to the lighter areas of the document have a greater light intensity and hence are more effective in dissipating the electrostatic charge on the copy paper than the portions of the image corresponding to the darker areas of the original. Subsequently, the latent image is developed into a visible image by bringing the photoconductive surface into contact with the visible particles which are electrically attracted to the latent electrostatic image.

To produce an accurate copy of the document, it is necessary for the document to be maintained flat against the window so as to be in focus with the optical projection system projecting the image of the document onto the copy paper. Furthermore, the document must be unevenly illuminated in a manner which compensates for the natural fall off of light intensity due to the angle at which light is radiated from the document and irradiated onto the surface of the copy paper as well as any vignetting inherent with the lens used in the optical projection system. The uneven illumination of the document is necessary so that all portions of the document having the same uniform shade of color will be projected onto the photoconductive surface of the copy paper with a uniform light intensity.

If the document to be copied is a page of a bound book, it is often difficult to place all of the printed portion of the page flat against the window, because the binding of the book tends to pull the adjacent portion of the page away from the window and out of focus with the optical projection system. This problem is particularly acute in the case of a large book with narrow margins, for example, a large dictionary. To facilitate the copying of a page of a book, it is desirable to provide a downwardly extending wall adjacent an edge of the window to maximize the portion of the page placed on the window for copying. Such an arrangement facilitates placing the page to be copied on the window by enabling the adjacent page and portion of the book not being copied to extend beneath the plane of the window with the binding being pressed towards the edge of the window.

When the copy of the document is produced by moving an optical projection system past the window so as to project the image of successive portions of the document onto the copy material, then it becomes necessary to move the illumination system past the window along with the optical projection system so as to illuminate those portions of the document being projected onto the copy paper. However, with the downwardly extending wall adjacent the edge of the window, the space available for the illumination system movable with the optical projection system is strictly limited. This problem becomes more acute when it is desirable to minimize the electrical power necessary to provide the proper illumination of the document by placing the illumination system closely adjacent to the window supporting the document.

Furthermore, the illumination system should have a constant light radiating characteristic so as to illuminate the document in a symmetrical manner so that all like colored portions of the document will be projected onto the image with the same light intensity. If the illumination system is composed of more than one lamp, then the light radiating characteristics of one lamp may be different from the light radiating characteristics of the other lamp, and consequently the image of the document being projected on the paper may not be uniform for all portions of the document having same uniform shade of color.

Accordingly, an object of the present invention is to provide an illumination system for use in a photocopying machine having a moving optical projection system wherein the physical size of the illumination system is substantially coextensive with the elongated strip portion of the window being illuminated for projection onto the copy paper.

Another object of the invention is to provide an illumination system for movement past the window along with the optical projection system wherein the portion of the document being scanned by the optical projection system is illuminated by a single light source.

A further object of the present invention is to provide an illumination system including an elongated light source having non-light radiating end portions and a reflector system for concentrating the light from the light source onto the portion of the window being scanned by the optical projection system, wherein the non-light radiating portions of the light source are covered by reflectors reflecting light from light radiating portions of the light source onto the portion of the window being scanned.

An additional object of the present invention is to provide an illumination system for illuminating an elongated strip portion of an object plane wherein the illumination system includes an elongated light source and a reflector system which are both substantially coextensive with the illuminated elongated strip portion of the object plane.

Still other objects, features and advantages of the present invention will be apparent to those skilled in the art from a reading of the following detailed description of a preferred embodiment of the invention, taken in conjunction with the accompanying drawings, wherein:

FIG. 1 is a partial perspective view of a preferred embodiment of a photocopying machine constructed in accordance with the present invention;

FIG. 2 is a longitudinal cross-sectional view of a portion of the machine shown in FIG. 1, and illustrating the projection of an illuminated portion of the object onto a copy paper;

FIG. 3 is a sectional view taken along the line 3—3 in FIG. 2, and illustrating the downwardly extending wall adjacent the edge of the window for enabling a page of a book to be copied;

FIG. 4 is a plan view of the illumination system according to the present invention;

FIG. 5 is a cross-sectional view of the illumination system shown in FIG. 4, and taken along the line 5—5 in FIG. 4;

FIG. 6 is a view of an in-line lamp used in the illumination system according to the present invention, and showing the distribution of the illumination intensity produced by the lamp; and

FIG. 7 is a sectional view taken along the lines 7—7 in FIG. 2.

Referring generally to the figures in the drawings, there is shown a photocopying machine, generally indicated **11**, for copying an original document **13** onto a copy material **15** with a photoconductive surface. The photocopying machine **11** includes a housing **17** having a projection compartment, generally indicated **19**, with a window **21** at the top of the machine **11** for supporting the document to be copied. The projection compartment **19** contains an illumination system, generally indicated **23**, for illuminating the document **13** and an optical projection system, generally indicated **25**, for projecting the image of the illuminated document **13** onto the copy material **15** at an exposure station, generally indicated **27**. The copy material **15** has a uniform electrostatic charge and is transported to the exposure station **27** by suitable transport means, as shown in the form of an endless belt which is driven by suitable means, not shown. At the exposure station **27**, the exposure of the photoconductive surface to the projected image causes a uniform electrostatic charge to be selectively dissipated to form a latent electrostatic image of the document **13**. Subsequently, the copy material **15** is advanced into the nip of a roller **31** cooperating with the endless belt **29** which removes the copy material **15** from the projection compartment **19** for further processing in the machine **11**. The means for driving the endless belt **29** and the cooperating roller **31** have been omitted from the description since they form no part of the present invention.

Inside the housing **17**, the illumination system **23** and the optical projection system **25** are mounted in a box-like enclosure **33** which serves as a carriage and is supported beneath the window **21** between front and back side walls **35, 37** respectively. The side walls **35, 37** extend upwardly and support the upper portion of the housing **17** so as to form the projection compartment **19**. As more particularly shown in FIGS. **2** and **3**, the upper portion of the housing **17** has an opening **39** formed therein with a lateral abutment **41** for supporting the glass window **21** with the upper surface thereof serving as an object plane in focus with the optical projection system **25**.

To reduce the cost of the lens used in the optical projection system **25**, the width of the window **21** is reduced to a minimum suitable size, for example, 8½ inches, and the copying machine **11** is provided with an optical projection system **25** which is movable past the window **21** so as to scan the document **13** and project successive portions thereof onto the copy material **15**. By using a narrow window **21** with a minimum suitable width and by providing the photocopying machine **11** with a scanning optical system, the field of view of the lens may be reduced to encompass only a portion of the document **13**, and hence a less expensive lens system may be utilized. As shown, to enable the optical projection system **25** to move past the window **21**, the enclosure **33** serves as a carriage and is supported for easy sliding movement past the window **21** by parallel shafts **43, 45** which are secured to the front and back side walls **35, 37** respectively. The shaft **45** is received through a bushing **47** in a bracket **49** attached to the adjacent side of the carriage **33** while the opposite side of the carriage has a block **51** attached thereto which rests on the other shaft **43** secured to the front side wall **35**.

To provide easy sliding movement of the carriage **33** past the window **21**, the block **51** and the bushing **47** engaging the shafts **43, 45** respectively, are constructed from suitable materials having a relatively low coefficient of friction. For example, the bushing **47** may be constructed from a suitable bearing material, for example, an oil impregnated porous bronze composition, and the block **51** may be constructed from a suitable material, for example, nylon.

When a copy of a document **13** is to be made, the face of the document **13** is placed against the window **21** for projection onto a photoconductive surface of suitable copy material **15** located at an exposure station **27**. As more particularly shown in FIG. **3**, to align the document **13** with the exposure station **27**, the upper portion of the housing **17** is provided with a ridge **53** extending above the surface of the object window **21** so as to provide an edge against which the document **13** may be registered. With the document **13** properly positioned on the window **21**, both the document **13** and the window **21** may then be covered by a lid **55** which is connected to the housing **17** of the photocopying machine by suitable means, for example, a hinge **56** and a switch, generally indicated **57** may be actuated to initiate the operation of the machine **11**.

Upon initiation of the operation of the machine **11**, the illumination system **23** is energized and copy paper **15**, having a uniform electrostatic charge imparted thereto, is transported by the endless belt **29** to the exposure station **27**. When the copy paper **15** reaches the exposure station **27**, a suitable drive for the carriage **33**, not shown, is energized for moving the carriage **33** from a starting position, generally indicated **33'** past the window **21** to a stopping position, generally indicated **33''**. The means for moving the carriage past the window **21** are not shown, since they form no part of the present invention.

As the carriage **33** moves past the window **21**, the illumination system **23** illuminates an elongated strip portion of the window **21** including the portion upon which the document **13** is placed. The illuminated strip portion of the document **13** is then projected onto the photoconductive surface of the copy paper **15** by the optical projection system **25**. As more particularly shown in FIG. **2**, the optical projection system **25** includes an objective lens system **59** having an optical axis parallel with the window **21** and the exposure station **27** and located equidistant therebetween. The box-like enclosure of the carriage **33** has an opening **61** in the top wall **63** through which light from the illumi-

nated strip portion of the document **13** passes into the enclosure **33.** The light from the illuminated portion of the document **13** is reflected through the lens system **59** in one direction by an upwardly facing oblique mirror **65** which is suitably mounted in the enclosure **33.** On the opposite side of the lens system **59** is a planar mirror, not shown, which reflects the light back through the lens system **59** in another direction to a downwardly facing oblique mirror **67** which is suitably mounted in the enclosure **33.** The mirror **67** reflects the light from the lens system **59** through an aperture **69** formed in the bottom wall **71** of the enclosure **33** and onto the photoconductive surface of the copy paper **15.**

When the image of the illuminated document **13** is projected onto the photoconductive surface of the copy paper **15,** the uniform electrostatic charge is dissipated in proportion to the intensity of the image. The portions of the image corresponding to the lighter areas of the document **13** have a greater light intensity and hence are more effective in dissipating the electrostatic charge on the copy paper **15** than the portions of the image corresponding to the darker portions of the document **13.** The carriage **33** moves past the window **21** at uniform speed, and as an elongated strip portion of the copy paper **15** is exposed to the projected image of a corresponding illuminated strip portion of the document **13,** the electrostatic charge is dissipated sufficiently by the portions of the image corresponding to the lighter portions of the original document **13** to form a latent electrostatic image of the document **13** on the surface of the copy paper **15.**

To vary the exposure of the copy paper **15** to the projected image of the illuminated document **13,** the carriage **33** is provided with a shutter **70** adjacent the aperture **69** in the bottom wall **71** of the carriage **33.** The shutter **70** is pivotally secured to the carriage **33** and may be moved into the path of the light passing through the aperture **69** to reduce the amount of illumination being projected onto the photoconductive surface of the copy paper **15.** Since the portions of the image corresponding to the marginal portions of the elongated illuminated strip portion of the document **13** have a greater light intensity than the central portion thereof, the end of the shutter **70** has a configuration to compensate for the uneven light intensity of the image being projected onto the copy paper **15.**

Stray light is prevented from distorting the electrostatic image formed on the copy paper **15** by providing suitable light shielding means, for example, bellows **72, 74,** which are attached to the front and back sides **34, 36** respectively of the carriage to cover the copy paper **15** and block any stray light in the projection compartment **19** from striking the photoconductive surface. In addition, a mask **75** is provided adjacent the aperture **69** in the bottom wall **71** of the carriage **33** to prevent stray light inside the enclosure **33** from passing through the aperture **69** and striking the photoconductive surface of the copy paper **15.**

To reduce the electrical power requirements needed to operate the machine **11,** it is desirable that the illumination system **23** be placed as close to the window as possible to minimize the illumination that must be produced by the light source associated with the illumination system **23** to provide the required uneven illumination of the document **13** for the copying process. The spacing between the illumination system **23** and the object window **21** is limited only by the possible scorching of the document **13** due to the heat produced by the illumination system **23** as well as the necessary mechanical clearance for locating the moving carriage **33** adjacent the upper portion of the housing **17.** Furthermore, it is desirable that the illumination system **23** include a reflector system which concentrates the amount of light directed onto the portion of the document **13** being copied so as to further reduce the amount of illumination that must be produced by the lamps used in the illumination system **23.**

However, to enable a page of a bound book to be copied by the machine **11,** the machine **11** is provided with a wall **77** extending downwardly from adjacent an edge **79** of the window **21** so that the portion of the page placed flat against the window **21** for copying may be maximized without the binding of the book pulling the adjacent portion of the page out of focus with the optical projection system. However, with the optical projection system **25** being movable past the window **21,** the illumination system **23** must likewise be movable past the window **21** and be capable of illuminating the elongated strip portion of the window **21** being scanned by the optical projection system **25,** including the edge portion **79** of the window **21** adjacent the downwardly extending wall.

However, the downwardly extending wall **77** adjacent the edge **79** of the window **21** necessarily limits the space available for an illumination system movable past the window with the optical projection system. This limitation is particularly severe when it is desired to place the illumination system closely adjacent the window, because the light source associated with the illumination system necessarily has non-light radiating portions such as electrical terminals as well as electrical contacts which would normally extend a material distance beyond the edge **79** of the window **21.** In the past, the uneven illumination has been accomplished by using multiple lamps in conjunction with a suitable reflector system. However, such an arrangement is undesirable because the light radiating characteristics of the two lamps are usually different, and this results in the image of like colored portions of the original document **13** being projected onto the copy paper with different light intensities.

From the foregoing, it will be appreciated that it is desirable to have an illumination system which is capable of properly illuminating an elongated strip portion of the window **21,** and yet be placed sufficiently close to the window to minimize the amount of illumination that must be produced, and hence minimize the electrical power requirements of the photocopying machine. Furthermore, it will be appreciated that it is desirable that the light source be arranged in the illumination system in such a way that non-light radiating portions do not extend beyond the elongated length of the illuminated strip portion of the window, and that the illumination system includes a reflector system for concentrating the illumination of the light source onto the portion being scanned by the optical projection system **25.**

A preferred embodiment of an illumination system **23** constructed in accordance with the present invention is shown in FIGS. **2-6** and is mounted inside the box-like enclosure of the carriage **33.** The illumination system **23** includes a light source means, generally indicated **81,** for radiating light through the opening **61** in

the top wall **63** of the enclosure **33** and a reflector assembly, generally indicated **83**, for concentrating the light from the light source means **81** onto the elongated strip portion of the window **21** being scanned by the optical projection system **25**.

To illuminate the portion of the window **21** being scanned in the manner diagrammatically shown in FIG. **3**, the light source means **81** includes an in-line lamp **85**. As more particularly shown in FIG. **6**, the lamp **85** has an elongated envelope **87** terminating at its opposite ends in electrical terminals **89, 91**. The envelope **87** contains a filament **93** with small light radiating portions **94, 96** spaced adjacent the electrical terminals **89, 91** respectively, which typically produce the illustrated illumination intensity distribution curve **97**. Although only a portion of the curve is shown in FIG. **6**, the illumination intensity distribution curve **97** is symmetrical about the filament **93** of the lamp **85**.

The light from the illumination system **23** is concentrated into an elongated strip portion on the object plane of the window **21** by the reflector assembly **83** which includes an elongated reflector **99** extending between the sides of the carriage **33** and having a cross-sectional configuration in the form of a conic section. As more particularly shown in FIGS. **2, 4** and **5**, the reflector **99** has an elliptical cross-sectional configuration with a vertex **101** at the base **103** and a longitudinally extending focal point, generally indicated **104**. The lamp **85** is supported with the filament **93** substantially located along the longitudinally extending focal point of the elliptical reflector **99** by suitable electrical contacts **105, 107** which are located at the opposite ends of the reflector **99**.

As more particularly shown in FIG. **5**, the electrical contact **105** is clamped between a pair of insulating members **121, 123** which are pressed toward the base **103** of the reflector **99** by a threaded bolt **125** which is threaded into a threaded bore **127** formed in the base **103** of the reflector **99**. The electrical contact **105** extends through a slot **129** formed in the base **103** of the reflector **99** and has a pin **131** secured thereto which projects laterally and engages the electrical terminal **89** at the end of the elongated lamp **85**. The other electrical contact **107** is secured to the base **103** of the reflector **99** in the same identical manner and engages the other electrical terminal **91** at the other end of the elongated lamp **85** in the same identical manner, and accordingly similar reference numerals have been placed on identical parts.

As shown in FIG. **2**, the optical projection system **25** has an optical path indicated by the phantom lines extending from the window **21** to the photoconductive surface of the copy paper **15**. The illumination system **23** is located outside the optical path of the optical projection system, with one side portion **99'** of the elliptical reflector **99** engaging the top wall **63** of the carriage **33** while the other side portion **99''** of the reflector **99** extends to the optical path of the projection system **25**. The portion **99''** of the elliptical reflector **99** serves to shield the light radiating portions **94, 96** of the filament **93** of the in-line lamp **85** from the oblique mirror **65** to prevent the image of the filament from being projected onto the copy paper **15**.

To further increase the illumination at the marginal portions of the window **21**, transverse reflectors **115, 117** respectively are secured to the sides of the carriage **33** at the ends of the elongated reflector **99** for reflecting light from the lamp **85** onto the marginal portions of the window **21**. As more particularly shown in FIG. **5**, the transverse reflectors **115, 117** obliquely intersect the longitudinally extending focal point of the elliptical reflector **99**, for example, at a 45° angle, and cover the nonlight radiating portions adjacent the respective ends of the lamp **85**, and also serve to reflect the light from the light radiating portions **94, 96** respectively, of the filament **93**. In addition, another reflector **119** is located on the other side of the optical path adjacent the opening **61** in the top wall **63** of the carriage **33** to further increase the intensity of the illumination across the entire window **21** and particularly at the marginal portions thereof.

Although the illumination system **23** constructed in accordance with the present invention illuminates the portion of the window **21** being scanned in a manner closely approximating that shown diagrammatically in FIG. **3**, slight variations from this desired illumination of the window may be compensated for by providing an additional light baffle adjacent the aperture **69** in the bottom wall **71** of the carriage **33**. As more particularly shown in FIGS. **2** and **7**, the mask **75** has a portion bent laterally toward the optical path of the optical projection system **25**, and the end of the mask **75** may serve as a light baffle and have a configuration, as more particularly shown in FIG. **7**, to compensate for any deviations in the desired illumination of the window **21**.

While only a limited number of embodiments have been illustrated and described, it will be apparent to those skilled in the art the various modifications and improvements may be made without departing from the scope and spirit of the invention. Accordingly, it is to be understood that the invention is not to be limited by the illustrative embodiment, but only by the scope of the appended claims.

What is claimed is:

1. In a photocopy machine having a window for supporting a document to be copied, an exposure station spaced from said window and an optical projection system between said window and said exposure station for projecting the image of said document to said exposure station, an illumination system for illuminating successive elongated strip portions of said window comprising:

a stationary wall bordering said window on one edge thereof transverse to and substantially at the ends of said elongated strip portions, said wall having a downwardly extending surface constituting an external surface of said photocopy machine;

first movable elongated light reflector means having a longitudinally extending reflecting surface with a cross sectional configuration in the form of a conic section having a vertex and at least one focal point and having a length substantially coextensive with the length of said elongated strip portions for reflecting light from a light source means onto said elongated strip portions thereby illuminating said document;

light source means having an elongated configuration located at said longitudinally extending focal point of said elongated reflector and movable with said elongated reflector, including a non light radiating portion at one end of said elongated configuration and a light radiating portion adjacent said non light radiating portion;

transverse reflector means movable with said elongated reflector having a substantially planar light reflecting surface for reflecting light from said light source means onto said elongated strip portions for increasing the intensity of illumination at marginal portions of said elongated strip portions above the intensity of illumination of the central portions thereof, said transverse reflector means being located transversely to a plane extending through the vertex and the focal point of said elongated light reflector means, said transverse reflector disposed obliquely to said elongated light reflector means covering said non light radiating portion at an end of said elongated configuration extending to intersect said longitudinally extending focal point of said elongated light reflector means to cover a portion of elongated configuration of said light source means and extending substantially to the vertical plane of said stationary wall;

and further comprising:

second movable light reflector means spaced from said first light reflector means and coacting with said first light reflector means to reflect light from said light source on successive elongated strip portions of said window;

a housing movably disposed in said copying machine and having upper and lower apertures;

said first movable elongated light reflector means, said light source means and said transverse reflecting means disposed in said housing to project light through said upper aperture of said housing for illuminating successive elongated strip portions of said window; and

baffle means associated with said lower aperture in said housing to regulate light reaching said exposure station.

2. In a photocopying machine as defined in claim **1** wherein said second movable light reflector is disposed within said housing to coact with said first light reflecting means.

* * * * *