(12) PATENT APPLICATION PUBLICATION
(19) INDIA
(22) Date of filing of Application :07/02/2022

(21) Application No.202241006423 A
(43) Publication Date : 25/02/2022

(54) Title of the invention : LOW COST POWER GENERATIVE FROM WASTE HEAT USING MICRO ORGANIC RANKINE CYCLE FOR SMALL SCALE

(51) International classification :F01N0005020000, F01K0025080000, C02F0103080000, F01K0025100000, H05G0002000000
(86) International Application No :NA
Filing Date :NA
(87) International Publication No : NA
(61) Patent of Addition to Application Number :NA
Filing Date :NA
(62) Divisional to Application Number :NA
Filing Date :NA

(71)**Name of Applicant :**
1)MEPCO SCHLENK ENGINEERING COLLEGE
Address of Applicant :MEPCO NAGAR, VIRUDHUNAGAR (VIA), SIVAKASI - 626005. ---------- ----------
Name of Applicant : NA
Address of Applicant : NA
(72)**Name of Inventor :**
1) Mr. P.V. INBANAATHAN AT/MECH
Address of Applicant :MEPCO SCHLENK ENGINEERING COLLEGE, MEPCO NAGAR, VIRUDHUNAGAR (VIA), SIVAKASI - 626005. ---------- ----------
2)Dr. DHINESH B Sr.AT/MECH
Address of Applicant :MEPCO SCHLENK ENGINEERING COLLEGE, MEPCO NAGAR, VIRUDHUNAGAR (VIA), SIVAKASI - 626005. ---------- ----------

(57) Abstract :
The investigation brings out the process for producing power from waste heat using micro-organic cycle at low cost. The process includes a set of smooth disks in an expander along with nozzles applying a moving fluid to the edge of the disk. The tangential flow of fluid gets dragged due to viscosity and adhesion into the disk adding more energy thus producing power. A waste heat from engine exhaust along with the heat from wicked heat loop pipe connecting the condenser is supplied to the evaporator for enhancing the conversion efficiency of organic fluid in the entire system.

No. of Pages : 14 No. of Claims : 4

I CLAIM

1) A process for power generation using micro-organic cycle comprising the steps of:

a) An expander with set of smooth disks, with nozzles applying a moving fluid to the edge of the disk in which the fluid flow was set to be tangential to the edges of the disk.

b) The fluid drags on the disk by means of viscosity and the adhesion of the surface layer of the fluid.

c) As the fluid slows and adds energy to the disks, it spirals into the centre exhaust.

d) Usage of waste heat at the evaporator heat pipe thus increasing the overall power output.

2) The process according to claim 1, wherein a novel expander with specifications are: 12 number of discs with 0.8 mm thickness, 40 mm internal diameter, 120 mm external diameter, 0.4 mm of gap between the discs, 0.36 of radius ratio of rotor disc, 0.7 mm of spacer thickness, 120° spacer orientation, and 2.5 mm of stator clearance.

3) The process according to claim 1, where in a novel heat loop copper pipe of dimensions are: 1m in length, 8mm of external diameter, 6mm of internal diameter.

4) The process according to claim 1, the output achieved was 3500 rpm at a torque of 15 Nm which yielded a power of about 5498 watts.

12/12 *

Signature of the applicant

PRINCIPAL
MEPCO SCHLENK ENGG. COLLEGE
Sivakasi (Autonomous),
Mepco Engg. College Post - 626 005.
Virudhunagar District.

07-Feb-2022/10785/202241006423/Form 2(Title Page)

PATENT OFFICE CHENNAI 09/02/2022 15:41

Complete Specification

Title

LOW-COST POWER GENERATION FROM WASTE HEAT USING MICRO ORGANIC RANKINE CYCLE FOR SMALL SCALE INDUSTRIES

Field of invention

Electricity is the main source of energy to drive all types of industries, household and even automobiles in future. There are various ways to produce electricity in large scale such as power plants, windmills etc. However, the drastic increase in requirement for electricity has created a huge demand which directly accelerates the cost of electricity bills. In order to counter this, a self-sustainable technology has been proposed to produce electricity up to 5KW of energy and also reduces the carbon content in the emission to a certain extent. It is achieved using a Tesla Turbine inspired expander and a closed loop heat pipe system. The system is cost effective, simplified design to promote machinability, form factor is reduced and require less maintenance.

Background of invention

1) Heat emission from various sectors is in enormous scale. They pollute the environment affecting the living species at a slower rate. However various technologies are being proposed to utilize the waste heat source and generate electricity.

2) Some of the methods are thermoelectric generators, thermodynamic cycles, such as organic Rankine cycle (ORC), super critical Rankine cycle, super critical Brayton cycle, Kalina cycle and trilateral flash cycle. Out of this Organic Rankine cycle is preferred for its simplicity and efficiency especially for industrial use.

07-Feb-2022/10785/202241006423/Form 2(Title Page)

PATENT OFFICE CHENNAI 09/02/2022 15:41

3) The Conventional Rankine cycle is an idealized thermodynamic cycle of a heat engine that converts heat into mechanical work while undergoing phase change. In Organic Rankine Cycle, the working fluid is the organic fluid/refrigerants which has low boiling point.

4) The selection of the working fluid is of key importance in Organic Rankine Cycles. Because of the low temperature, heat transfer inefficiencies are highly prejudicial. These inefficiencies depend very strongly on the thermodynamic characteristics of the fluid and on the operating conditions.

5) In order to recover low-grade heat, the fluid generally has a lower boiling temperature than water. Refrigerants and hydrocarbons are two commonly used components.

6) Material selection is based on the working conditions of each part. In this system, rotor works at high pressure and high speed. Hence, care has been taken in material selection of the rotot.

7) A turbo expander, also referred to as an expansion turbine, is a centrifugal or axial-flow turbine, through which a high-pressure gas is expanded to produce work that is used to drive a generator. Expanders can expand various gases unlike steam turbine. Since organic fluids are used in Organic Rankine Cycle, conventional turbines cannot be used due to efficiency and space constraints.

8) The expander consists of frustum shaped discs placed at a very small distance in terms of mm. It consists of a set of smooth disks, with nozzles applying a moving fluid to the edge of the disk. The fluid drags on the disk by means of viscosity and the adhesion of the surface layer of the fluid. As the fluid slows and adds energy to the disks, it spirals into the centre exhaust.

9) Existing volumetric expanders are costly and is not suitable for small scale industries due to the form factor and efficiency. So, there is a need to develop a new type of expansion machine which can assist in the success of small-scale electricity generation systems.

07-Feb-2022/10785/2022410064 23/Form 2(Title Page)

PATENT OFFICE CHENNAI

10) Several critical changes in design of Tesla Turbine are implemented to improve the rpm with a smaller footprint such that there is efficient creation of boundary layer and vortex and improved exhaust pathway.

11) The rotor housing houses the Expander Discs inside it with an inlet nozzle supply on the side to promote tangential flow into the rotor.

12) Fabrication of Rotor involved three different machining processes. Namely, Laser Cutting, Buffing and Spot Welding. Fabrication of Shaft and Stator involves three different machining processes namely turning, thread cutting and milling.

13) The present invention involves a Tesla Turbine concept designed for Small Scale Organic Rankine Cycle application. The CAD model was designed using Solidworks. Dimensions were finalised based on journal papers of several researchers. Various machining processes were utilised in the fabrication process. For the purpose of testing, R243fa organic fluid was used and approx. 3500 rpm was achieved. Even though this result is quite far from *theoretical calculation, various losses in practical scenario has not been taken into account.* Increasing the number of nozzles in future would definitely increase the output substantially.

SUMMARY OF THE INVENTION

- The investigation pin points the innovation in the design of loop heat pipe and novel expander along with the usage of waste heat for power generation using micro-organic cycle. Therefore, it is more advantageous than the existing compressor in power generation using micro organic cycle in-terms of cost.

A method for generating power from micro-organic Rankine cycle, comprises the steps of

1) R235fa organic fluid in gases state passing through the novel designed expander using a nozzle.

07-Feb-2022/10785/202241006423/Form 2(Title Page)

PATENT OFFICE CHENNAI 09/02/2022 15:41

2) The fluid after expansion in the expander moves through the condenser where it condenses to liquid state.

3) The liquid again passes through the evaporator where it gains heat from waste energy and gets converted into high pressure gas for further expansion in the expander.

4) The application of waste heat was taken from the engine exhaust pipe which could be extended to industries according to their convenience of waste heat generating devices.

5) A novel designed closed heat loop pipe with wick is connecting the evaporator and condenser, thus exchanging heat with both the systems.

DETAIL DESCRIPTION OF THE INVENTION

- In order that those skilled in the art can further understand the present invention, a description will be described in the following details. However, this discretion and the appended drawings are only used to cause those skilled in the art of understand the object, features and characteristics of the present invention.

1. Figure:1 Assembled view of Organic ranking cycle apparatus using novel designed expander
2. Figure:2 Exploded view of expander design
3. Table:1 Raw materials used for construction
4. Table:2 Machining process used to produce different components
5. Figure:3 Rotor disc, Rotor Discs assembled in a Shaft, Rotor Housing (Stator) with nozzle at the side for high velocity inlet flow, Rotor housing Assembly
6. Figure: 4 Cross sectional view of Loop Heat Pipe

STEPS FOR GENERATING POWER USING MICRO ORGANIC CYCLE

1) Working fluid for the entire process is chosen based on the boiling point, viscosity, flammability and environment friendly properties.

07-Feb-2022/10785/202241006423/Form 2(Title Page)

PATENT OFFICE CHENNAI 09/02/2022 15:41

R235fa (Pentafluoropropane):

a) Boiling point: 15.3 °C (59.5 °F; 288.4 K),

b) Non-ozone depleting and non-flammable.

c) Non-toxic and eco-friendly.

d) Quantity of Fluid: 500 ml.

2) The expander consists of frustum shaped discs placed at a very small distance of about 0.7 mm. It consists of a set of smooth disks, with nozzles applying a moving fluid to the edge of the disk. The fluid drags on the disk by means of viscosity and the adhesion of the surface layer of the fluid. As the fluid slows and adds energy to the disks, it spirals into the centre exhaust. It is made up of material: 120* 120 *0.8 mm (12 pcs.) Stainless Steel AISI 316.

3) The rotor housing is made up of material: Aluminium 4130 160*160*100 mm Billet.

4) The rotor enclosure is made up of material: Aluminium 4130-160*160*3mm thick sheet, 100 mm Diameter, 4mm Thick, 50mm Height Aluminium Hollow Rod.

5) The evaporator and condenser heat loop pipe is made up of material: copper billet, 500mm*500mm*10 mm (Machined into 4 pieces for covering the loop heat pipe). Waste heat supplied at the evaporator is at 50°C.

6) Austenitic Cr-Ni stainless steel 304 is chosen for the rotor system. Better corrosion resistance than Type 302. Aluminium 6061 is chosen for the Stator system. Excellent joining characteristics, good acceptance of applied coatings.

Example: -

The composition of the invention including its power generating efficiency will be illustrated and demonstrated with the help of an example.

Example 1:- According to the procedure described below, the power has been generated from waste heat using micro-organic Rankine cycle.

07-Feb-2022/10785/202241006423/Form 2(Title Page)

PATENT OFFICE CHENNAI 09/02/2022 15:41

The expander consists of thin parallel discs placed at a very small distance of about 0.7 mm. It consists of a set of smooth disks, with nozzles applying a moving fluid at a pressure of 5 bar to the edge of the disk. Here, the fluid flow is set to be tangential to the edges of the disk. As the fluid slows and adds energy to the disks, it spirals into the centre exhaust. Upon testing of the fabricated setup, we were able to achieve 3500 rpm at a torque of 15 Nm which yields power of about 5498 watts.

ADVANTAGE OF PRESENT INVENTION

- The proposed design is simple and efficient.
- Cheaper to install and manufacture.
- Eco-friendly.
- Small form factor.
- Highly suitable for small and medium scale industries.
- Less maintenance cost.

07-Feb-2022/10785/202241006423/Form 2(Title Page)

PATENT OFFICE CHENNAI 09/02/2022 15:41

ABSTRACT

The investigation brings out the process for producing power from waste heat using micro-organic cycle at low cost. The process includes a set of smooth disks in an expander along with nozzles applying a moving fluid to the edge of the disk. The tangential flow of fluid gets dragged due to viscosity and adhesion into the disk adding more energy thus producing power. A waste heat from engine exhaust along with the heat from wicked heat loop pipe connecting the condenser is supplied to the evaporator for enhancing the conversion efficiency of organic fluid in the entire system.

07-Feb-2022/10785/202241006423/Form 2(Title Page)

PATENT OFFICE CHENNAI 09/02/2022 15:41

700251301

FORM 2
THE PATENT ACT 1970
(39 of 1970)
&
The Patents Rules, 2003
PROVISIONAL/COMPLETE SPECIFICATION
(See section 10 and rule13)

1. TITLE OF THE INVENTION
LOW COST POWER GENERATION FROM WASTE HEAT USING MICRO ORGANIC RANKINE CYCLE FOR SMALL SCALE INDUSTRIES

2. APPLICANT (S)
(a) NAME: The Principal, Mepco Schlenk Engineering College (Autonomous) Sivakasi
(b) NATIONALITY: INDIAN
(c) ADDRESS: Mepco Schlenk Engineering College (Autonomous) Sivakasi

3. PREAMBLE TO THE DESCRIPTION

PROVISIONAL	COMPLETE
The following specification describes the invention.	The following specification particularly describes the invention and the manner in which it is to be performed. ✓

4. DESCRIPTION (Description shall start from next page.)

5. CLAIMS (not applicable for provisional specification. Claims should start with the preamble — "**I/we claim**" *on separate page*)

6. DATE AND SIGNATURE (to be given at the end of last page of specification)

7. ABSTRACT OF THE INVENTION (to be given along with complete specification on separate page)

Note: -
*Repeat boxes in case of more than one entry.
*To be signed by the applicant(s) or by authorized registered patent agent.
*Name of the applicant should be given in full, family name in the beginning.
*Complete address of the applicant should be given stating the postal index no./code, state and country.
*Strike out the column which is/are not applicable

07-Feb-2022/10785/2022410064 23/Form 2(Title Page)

PATENT OFFICE CHENNAI 09/02/2022 15:11

Inventor: Mr. P.V.Inbanaathan, Dr. B.Dhinesh

Application Number: Number of sheets: 4 (Sheet No: 1 of 4)

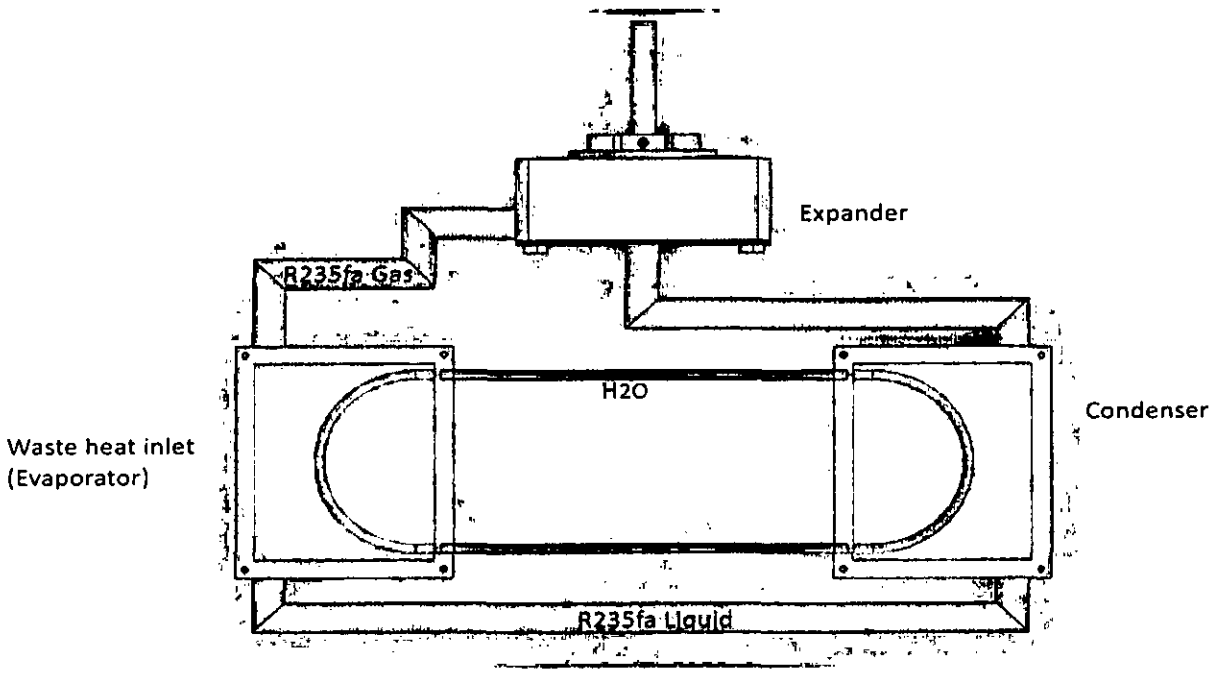

Figure:1 Assembled view of Organic ranking cycle apparatus using novel designed expander

8/12 *

PRINCIPAL
MEPCO SCHLENK ENGG. COLLEGE
Sivakasi (Autonomous),
Mepco Engg. College Post - 626 005,
Virudhunagar District.

07-Feb-2022/10785/202241006423/Form 2(Title Page)

PATENT OFFICE CHENNAI 09/02/2022 15:41

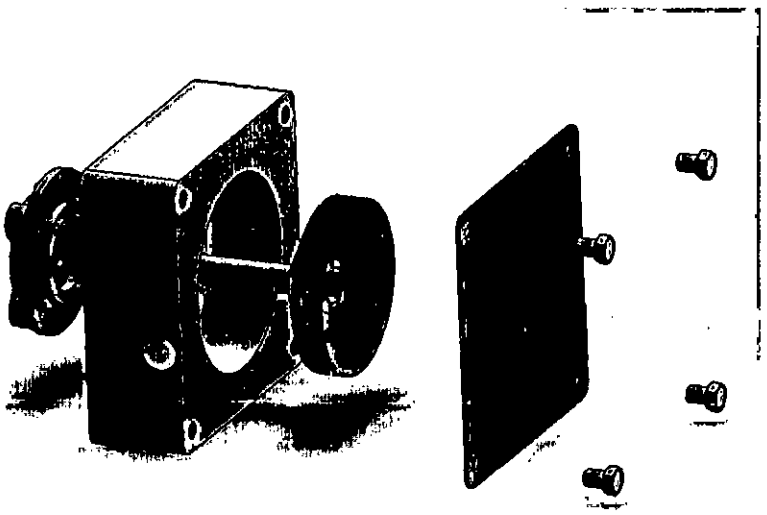

Figure:2 Exploded view of expander design

S.No	Material	Required Quantity
1.	Stainless Steel AISI 316	120* 120 *0.8 mm (12 pcs.)
2.	Aluminium 4130	160*160*100 mm Billet
3.	Aluminium 4130	160*160*3mm thick sheet
4.	Aluminium Hollow Rod	100 mm Diameter, 4mm Thick, 50mm length
5.	Copper	1m Length, 8mm External Diameter, 2mm thick pipe
6.	Copper billet	500mm*500mm*10 mm
7.	R235fa Refrigerant	2 litres
8.	NTN Magnetic Bearing 20mm Diameter	2 pieces
9.	Fasteners	M5*20mm 4 Nos., M3*15mm 8 Nos.,

Table:1 Raw materials used for construction

S. No	Operation
1.Expander	1.Punching 2.Bending 3. Turning
2. Expander Housing	1.Drilling 2. Boring
3. Rotor Enclosure (Outlet)	1.Drilling 2. Gas Welding
4.Condenser and evaporator Heat pipe loop:	1. Tube Drawing 2. Sintering 3. Bending

Table:2 Machining process used to produce different components

PRINCIPAL
MEPCO SCHLENK ENGG. COLLEGE
Sivakasi (Autonomous),
Mepco Engg. College Post - 626 005.
Virudhunagar District.

07-Feb-2022/10785/202241006423/Form 2(Title Page)

PATENT OFFICE CHENNAI 09/02/2022 15:41

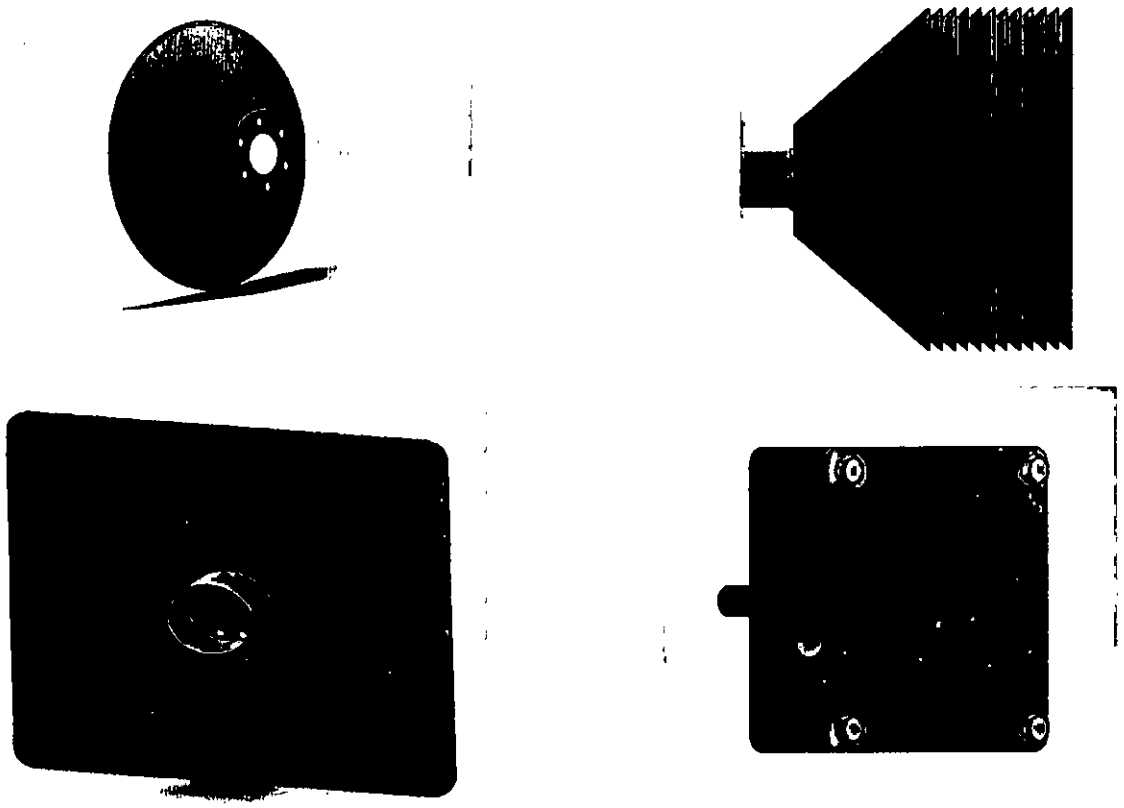

Figure:3 Rotor disc, Rotor Discs assembled in a Shaft, Rotor Housing (Stator) with nozzle at the side for high velocity inlet flow, Rotor housing Assembly

10/12 * S.

PRINCIPAL
MEPCO SCHLENK ENGG. COLLEGE
Sivakasi (Autonomous),
Mepco Engg. College Post - 626 005,
Virudhunagar District.

07-Feb-2022/10785/2022241006423/Form 2(Title Page)

PATENT OFFICE CHENNAI 09/02/2022 15:41

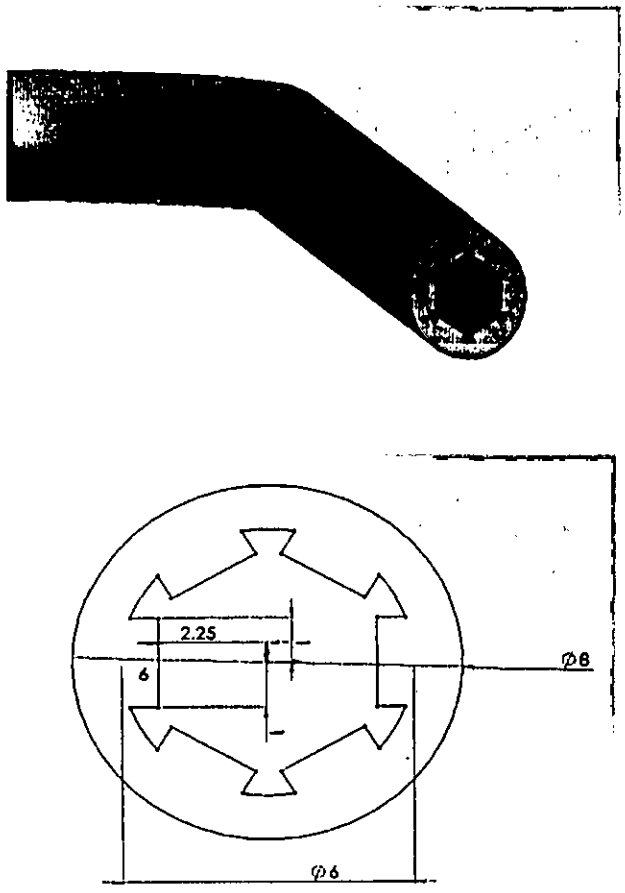

Figure: 4 Cross sectional view of Loop Heat Pipe

11/12

PRINCIPAL
MEPCO SCHLENK ENGG. COLLEGE
Sivakasi (Autonomous),
Mepco Engg. College Post - 626 005,
Virudhunagar District.

07-Feb-2022/10785/202241006423/Form 2(Title Page)

PATENT OFFICE CHENNAI 09/02/2022 15:41